ENSTROM HELICOPTER CORPORATION

2209 22nd Street | Menominee, MI 49858
EnstromHelicopter.com | 906.863.1200

ENSTROM TH-28/480 SERIES ILLUSTRATED PARTS CATALOG

2001 Edition

Revision 18, dated May 28/24, applies to the Enstrom TH-28/480 Series Illustrated Parts Catalog, 2001 Edition. Place this cover sheet behind the "Record of Revisions" sheet after removing and inserting the pages listed below.

Remove Pages	Insert Pages	Remove Pages	Insert Pages
i through ii	i through ii	7-29 through 7-31.1	7-29 through 7-31.1
v through cvi	v through cxiv	8-13 through 8-16	8-13 through 8-16
3-1.2 through 3-2	3-1.2 through 3-2	8-19 through 8-20	8-19 through 8-20
3-5 through 3-6	3-5 through 3-6	9-3 through 9-6	9-3 through 9-6
3-9 through 3-16	3-9 through 3-16	9-9 through 9-12	9-9 through 9-12
3-25.4 through 3-25.13	3-25.4 through 3-25.13	9-17 through 9-17.1	9-17 through 9-17.1
3-27 through 3-28	3-27 through 3-28	9-35 through 9-38	9-35 through 9-38
3-31 through 3-36	3-31 through 3-36	9-43 through 9-47.1	9-43 through 9-47.1
3-55 through 3-58	3-55 through 3-58	9-49 through 9-52	9-49 through 9-52
3-71 through 3-80	3-71 through 3-92	10-1.2 through 10-2	10-1.2 through 10-2
4-3 through 4-8	4-3 through 4-8	10-37 through 10-38	10-37 through 10-38
4-11 through 4-12	4-11 through 4-12	10-41 through 10-46	10-41 through 10-46
4-15 through 4-18	4-15 through 4-18	10-49 through 10-52	10-49 through 10-52
5-3 through 5-14	5-3 through 5-14	10-61 through 10-64	10-61 through 10-64
6-7 through 6-11.3	6-7 through 6-11.3	10-83 through 10-84	10-83 through 10-84
6-11.6 through 6-14	6-11.6 through 6-14	10-109 through 10-114	10-109 through 10-114
6-17 through 6-22	6-17 through 6-22	11-5 through 11-6	11-5 through 11-6
6-33 through 6-34	6-33 through 6-34	11-9 through 11-9.1	11-9 through 11-9.1
6-38 through 6-50	6-38 through 6-50	11-11 through 11-12	11-11 through 11-12
7-2.1 through 7-3	7-2.1 through 7-3	11-17 through 11-20	11-17 through 11-20
7-25 through 7-26	7-25 through 7-26	B-1 through B-16	B-1 through B-16
7-26.3 through 7-26.4	7-26.3 through 7-26.4		

* * End of List * *

INTENTIONALLY LEFT BLANK

ENSTROM TH-28/480 SERIES

ILLUSTRATED PARTS CATALOG

2001 EDITION

MODEL EFFECTIVITY: TH-28, 480, AND 480B

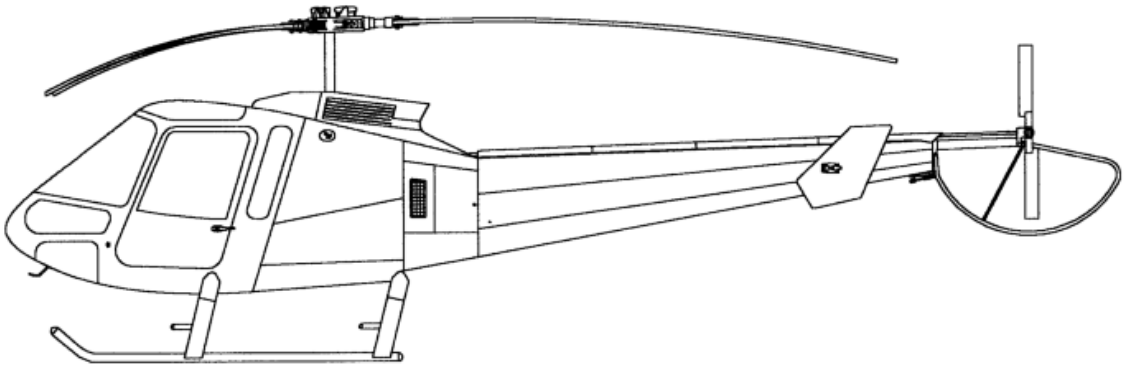

Download an electronic copy of this manual from the Technical Support page at www.enstromhelicopter.com.

Copyright 2024 by
The Enstrom Helicopter Corporation
2209 22nd Street
Menominee, Michigan 49858-3515

Telephone: 906-863-1200
Fax: 906-863-6821

INTENTIONALLY LEFT BLANK

TABLE OF CONTENTS

Figure	Description	Page
	Record of Revisions	–
	Change Instructions	–
	Title Page	i
	Recommended Change Report	iii
	Table of Contents	v
	Effective Page List	xi
	Part Number Index	xx
SECTION 1 – INTRODUCTION		
	Table of Contents	1-1.2
	Scope	1-2
	Introductory Information	1-2
	Detailed Parts List	1-3
	Appendices	1-4
SECTION 2 – PARTS ORDERING INFORMATION		
	Table of Contents	2-1.2
	General	2-2
	Parts Orders	2-2
	Shipment	2-3
	Emergency Requirements	2-3
	Credit Terms	2-3
SECTION 3 – STRUCTURES		
	Table of Contents	3-1.2
3-1	Structural Assembly	3-2
3-2	Cowling and Access Panels	3-8
3-3	Windshield and Window Installation	3-16
3-4	Sliding Window Installation	3-22
3-5	Engine Cowl Door Opener	3-24
3-6	Cabin Door Assembly	3-25.1
3-6.1	Cabin Door Installation	3-25.7
3-6.2	Cabin Door Opener	3-26
3-7	Tailcone Installation	3-30
3-8	Horizontal and Vertical Stabilizer Installation	3-32
3-9	Tail Rotor Guard and Extension Tube Installation	3-36
3-10	Tail Rotor Guard Installation (4172000-101)	3-38
3-11	Tail Rotor Guard Installation (4172000-9)	3-40
3-12	Tailcone Vibration Absorber Installation	3-42
3-13	Tail Rotor Drive Shaft Cover Installation	3-46
3-14	Seat Installation - TH-28	3-52
3-15	Seat Installation - 480/480B	3-54
3-16	Seat Assembly	3-56
3-17	Seat Base Assembly	3-58
3-18	Bench Seat Installation	3-62
3-19	Passenger Footrest Installation	3-70
3-20	Exterior Markings	3-72

TABLE OF CONTENTS

Figure	Description	Page
3-21	Interiors	3-76
3-22	Pilot and Co-Pilot Seat Assembly	3-81
3-23	Cushion Collection and Armrest Assembly	3-85

SECTION 4 – LANDING GEAR

	Table of Contents	4-1.2
4-1	Landing Gear Cross Tube Installation	4-2
4-2	Landing Gear Assembly and Installation	4-4
4-3	Landing Gear Oleo Installation	4-8
4-4	Oleo Assembly	4-10
4-5	Landing Gear Fairing Installation	4-14
4-6	Landing Gear Steps	4-18

SECTION 5 – FUEL SYSTEM

	Table of Contents	5-1.2
5-1	Fuel Cell Installation – Aerotech/UFCC Fuel Cells	5-2
5-2	Fuel Bladder Structure Assy/Install– Aerotech/UFCC Fuel Cells	5-6
5-3	Fuel Cell Installation - Aerazur Fuel Cells	5-14
5-4	Fuel Cell Installation - Aerazur Fuel Cells S/N 5011 and 5012	5-16
5-5	Fuel Line Installation – Aerotech/UFCC Fuel Cells	5-20
5-6	Fuel Line Installation - Aerazur Fuel Cells	5-26
5-7	Flanged Plate Assembly – Aerotech/UFCC Fuel Cells	5-30
5-8	Fuel Shutoff Valve Assembly	5-32
5-9	Sump Drain Valve Installation	5-40
5-10	Fuel Shutoff Cable Installation S/N 5001- 5145	5-42
5-11	Fuel Shutoff Cable Installation	5-44
5-12	Optional Airframe Mounted Fuel Filter	5-48

SECTION 6 – POWER PLANT & SYSTEMS

	Table of Contents	6-1.2
6-1	Engine Buildup Assembly	6-2
6-1.1	Fire Curtain Installation	6-11.3
6-2	Starter/Generator Cooling Installation	6-12
6-3	Engine Air Induction System	6-14
6-4	Particle Separator/Scav-Air Line Installation	6-18
6-5	Scav-Air/Anti-Ice Control Panel Installation	6-20
6-6	Engine Power Control Installation	6-22
6-7	Engine Idle Stop Assembly	6-26
6-7.1	Engine Idle Stop Assembly – Dual Start Control	6-28
6-7.2	Engine Idle Stop Assembly – Dual Start Control Detail	6-30
6-7.3	Engine Idle Stop Assembly – Dual Start Control Relay Detail	6-32
6-8	Droop Compensator Installation	6-34
6-9	Engine Oil System	6-37
6-10	Oil Cooler Blower Installation	6-42
6-11	Oil Cooler Ducting TH-28 SN 3006, 480 SN 5001-5022	6-46
6-12	Oil Cooler Ducting TH-28 SN 3007, 480 SN 5023 and Subs	6-48
6-13	Eductor Installation	6-52
6-14	Eductor Installation (Obsolete)	6-54

TABLE OF CONTENTS

Figure	Description	Page
SECTION 7 – DRIVE TRAIN		
	Table of Contents	7-1.2
7-1	Overrunning Clutch Assembly	7-2
7-1.1	Clutch Vent Reservoir Assembly	7-3
7-2	Drive Shaft Assembly	7-4
7-3	Drive System Installation	7-6
7-4	Lower Pulley Assembly (Grease Lubricated)	7-10
7-5	Lower Pulley Assembly (Oil Lubricated)	7-14
7-6	Upper Pulley Assembly (Keyed Pinion)	7-18
7-6.1	Upper Pulley Assembly (Splined Pinion)	7-20.2
7-7	Main Rotor Transmission Installation	7-22
7-8	Main Rotor Transmission Assembly (Keyed Pinion)	7-24
7-8.1	Main Rotor Transmission Assembly (Splined Pinion)	7-26.2
7-8.2	Main Rotor Transmission Seal Retainer Assembly	7-27.1
7-9	Main Rotor Transmission Filtration/Cooling System	7-28
7-10	Tail Rotor Drive Shaft Installation	7-32
7-11	Tail Rotor Transmission Assembly	7-36
SECTION 8 – ROTOR SYSTEMS		
	Table of Contents	8-1.2
8-1	Main Rotor Hub Assembly - Grease Lubricated	8-2
8-2	Main Rotor Hub Assembly - Oil Lubricated	8-6
8-3	Main Rotor Blade and Retention Assembly	8-10
8-4	Retention Assembly/Flapping Pin Installation	8-16
8-5	Hydraulic Damper Assembly	8-18
8-6	Main Rotor Damper Installation	8-22
8-7	Tail Rotor Assembly	8-24
SECTION 9 – FLIGHT CONTROLS		
	Table of Contents	9-1.2
9-1	Cyclic Stick and Torque Tube Installation	9-2
9-2	Cyclic Control Tube and Bellcrank Installation	9-6
9-3	Cyclic Trim Assembly	9-12
9-4	Collective Stick and Torque Tube Installation	9-16
9-5	Collective Control Tube and Bellcrank Installation	9-18
9-6	Collective Stick – Pilot (SN 5135 and Prior)	9-20
9-7	Collective Stick – Copilot (SN 5135 and Prior)	9-22
9-7.1	Collective Stick – Pilot (SN 5136 and Subs)	9-23.1
9-7.2	Collective Stick – Copilot (SN 5136 and Subs)	9-23.5
9-8	Collective Trim Assembly	9-24
9-9	Collective Friction Assembly	9-28
9-10	Lower Swashplate Assembly Installation	9-30
9-11	Lower Swashplate Assembly	9-32
9-12	Upper Swashplate Assembly and Controls	9-34
9-13	Main Rotor Pitch Change Controls	9-38
9-14	Tail Rotor Control System	9-40
9-15	Tail Rotor Rotating Controls	9-48

TABLE OF CONTENTS

Figure	Description	Page
SECTION 10 – ELECTRICAL/INSTRUMENT SYSTEMS		
	Table of Contents	10-1.2
10-1	TH-28 Instrument Panel Equipment Installation	10-2
10-2	480 Standard Instrument Panel Equipment Installation	10-8
10-3	480 (Optional)/480B Instrument Panel Equipment Installation	10-16
10-4	480B Instrument Panel Equipment Installation	10-22
10-5	TH-28 Circuit Breaker Panel	10-30
10-6	480 Circuit Breaker Panel	10-32
10-7	480 Optional Circuit Breaker Panel	10-34
10-8	480B Circuit Breaker Panel	10-36
10-9	480B Circuit Breaker Panel	10-38
10-10	Pedestal Miscellaneous Equipment	10-44
10-11	Outside Air Temperature (OAT) Gauge Installation	10-46
10-12	NiCad Battery Tray Installation	10-48
10-13	Standard Battery Tray Installation	10-50
10-14	Battery Installation	10-54
10-15	Aft Battery Installation	10-56
10-16	Electrical Component Installation (Right Side Backwall)	10-58
10-17	Electrical Component Installation Relays Only (Right Side Backwall)	10-61
10-18	Electrical Components - Keel Installation	10-66
10-19	Generator Control Unit/T9 Terminal Strip Installation	10-72
10-20	Engine Oil Pressure and Torque Indication System	10-74
10-21	Engine T.O.T. Harness Terminal Block	10-76
10-22	Fire Detector Installation	10-78
10-23	Low Rotor Warning and Micro Switch Installation	10-80
10-23.1	Hi/Lo Rotor RPM Switch Installation	10-83.1
10-24	TH-28 Chip Detector Program Continuity Sensor Installation	10-84
10-24.1	480/480B Programmed Continuity Sensors – Engine and Main Rotor Transmission Chip Detectors	10-86.2
10-24.2	480/480B Programmed Continuity Sensor – Tail Rotor Transmission Chip Detector	10-86.6
10-25	Bearing Temperature Warning System (Grease Lubricated)	10-88
10-26	Bearing Temperature Warning System (Oil Lubricated)	10-90
10-27	Engine Air Inlet Pressure System	10-94
10-28	Landing Light Assembly Installation.	10-98
10-29	LED Landing Light Assembly Installation	10-100
10-30	Position/Anti-Collision Light Installation	10-104
10-31	Position/Anti-Collision Light Assembly	10-106
10-32	Position/Anti-Collision LED Light Assembly	10-108
10-33	Static Port and Pitot Tube Installation	10-110
10-34	Static and Pitot Line Installation	10-114
10-35	Instrument Console Shroud Installation	10-118
10-36	KMA 24H-71 Audio Panel Installation	10-120
10-37	GTX 327 Transponder Installation	10-124
10-38	GTX 327 Antenna Installation Forward (Preferred) Location	10-128
10-39	GTX 327 Antenna Installation Aft (Alternate) Location	10-132

TABLE OF CONTENTS

Figure	Description	Page
SECTION 11 – UTILITY SYSTEMS		
	Table of Contents	11-1.2
11-1	Bleed Air Heater and Defroster Installation	11-2
11-2	Heater and Defroster Valve Assemblies	11-8
11-3	Heater Manifold Assembly	11-10
11-4	Fresh Air Ventilation Installation	11-12
11-5	Fresh Air Ventilation Installation	11-16
11-6	Overhead Console Vent/Light Assembly	11-20
APPENDIX A – EQUIVALENT PARTS		
	Table of Contents	A-3
	Introduction	A-4
	Equivalent Parts Tables	A-4
APPENDIX B – HARDWARE SUBSTITUTIONS		
	Cover Page	B-1
	Table of Contents	B-1
	Introduction	B-2
	Acceptable Substitution Conditions	B-2
	Hardware Tables	B-2
	Table A – Bolts	B-3
	Table B – Screws	B-5
	Table C – Nuts	B-6
	Table D – Nut Plates	B-7
	Table E – Solid Rivets	B-8
	Table F – Blind Rivets	B-9
	Table G – Washers	B-9
	Table H – Rivnuts	B-10
	Table I – Turnbuckles	B-11
	Table J – Grommets	B-11
	Table K – Cotter Pins	B-11
	Table L – Clamps (Nylon)	B-12
	Table M – Cable Ties	B-12
	Table N – U-Channel (Rubber)	B-13
	Table O – Shrink Tubing	B-13
	Table P – Ring Tongue Terminals	B-14
	Table Q – Retaining Rings	B-15
	Table R – Cushioned Clamps	B-15
	Table S – Plusnuts	B-15
	Table T – Solder Sleeve Shield Terminator	B-15
	Table U – Plug, Pipe – Countersink Hex Head	B-15
	Table V – Clip Nut	B-15
	Table W – Plug and Bleeder – Screw Thread	B-15

Figure	Description	Page
	Table X – Pin, Retaining, Safety	B-15
	Table Y – Quarter Turn Fastener	B-15
	Table Z – Quick Disconnect Terminal	B-15
	Table AA – Plug (BNC, TNC, N)	B-15
	Table AB – Roll Pin	B-15
	Table AC – Sleeve, Coupling	B-15
	Table AD – Clevis Pin	B-15
	Table AE – Quarter (1/4) Turn Fastener Receptacle	B-16
	Table AF – Sleeve, Flared Tube Fitting	B-16

EFFECTIVE PAGE LIST

Page	Date	Page	Date
i	May 28/24	xliv	May 28/24
ii	Dec 15/10	xlv	May 28/24
iii	Feb 1/13	xlvi	May 28/24
iv	Jan 29/11	xlvii	May 28/24
v	May 28/24	xlviii	May 28/24
vi	May 28/24	xlix	May 28/24
vii	Oct 30/15	l	May 28/24
viii	May 28/24	li	May 28/24
ix	May 28/24	lii	May 28/24
x	May 28/24	liii	May 28/24
xi	May 28/24	liv	May 28/24
xii	May 28/24	lv	May 28/24
xiii	May 28/24	lvi	May 28/24
xiv	May 28/24	lvii	May 28/24
xv	May 28/24	lviii	May 28/24
xvi	May 28/24	lix	May 28/24
xvii	May 28/24	lx	May 28/24
xviii	May 28/24	lxi	May 28/24
xix	May 28/24	lxii	May 28/24
xx	May 28/24	lxiii	May 28/24
xxi	May 28/24	lxiv	May 28/24
xxii	May 28/24	lxv	May 28/24
xxiii	May 28/24	lxvi	May 28/24
xxiv	May 28/24	lxvii	May 28/24
xxv	May 28/24	lxviii	May 28/24
xxvi	May 28/24	lxix	May 28/24
xxvii	May 28/24	lxx	May 28/24
xxviii	May 28/24	lxxi	May 28/24
xxix	May 28/24	lxxii	May 28/24
xxx	May 28/24	lxxiii	May 28/24
xxxi	May 28/24	lxxiv	May 28/24
xxxii	May 28/24	lxxv	May 28/24
xxxiii	May 28/24	lxxvi	May 28/24
xxxiv	May 28/24	lxxvii	May 28/24
xxxv	May 28/24	lxxviii	May 28/24
xxxvi	May 28/24	lxxix	May 28/24
xxxvii	May 28/24	lxxx	May 28/24
xxxviii	May 28/24	lxxxi	May 28/24
xxxix	May 28/24	lxxxii	May 28/24
xl	May 28/24	lxxxiii	May 28/24
xli	May 28/24	lxxxiv	May 28/24
xlii	May 28/24	lxxxv	May 28/24
xliii	May 28/24	lxxxvi	May 28/24

EFFECTIVE PAGE LIST

Page	Date	Page	Date
lxxxvii	May 28/24	1-1	Jul 31/12
lxxxvii	May 28/24	1-1.1	Dec 20/13
lxxxviii	May 28/24	1-1.2	Nov 28/22
lxxxix	May 28/24	1-2	Sep 27/18
lxxxx	May 28/24	1-3	Sep 27/18
lxxxxi	May 28/24	1-4	Sep 27/18
lxxxxii	May 28/24	2-1	Dec 20/13
lxxxxiii	May 28/24	2-1.1	Dec 20/13
lxxxxiv	May 28/24	2-1.2	Nov 28/22
lxxxxv	May 28/24	2-2	Jul 22/2020
lxxxxiv	May 28/24	2-3	Jul 31/12
lxxxxv	May 28/24	2-4	Jul 31/12
lxxxxvi	May 28/24	3-1	Aug 13/07
lxxxxvii	May 28/24	3-1.1	Dec 20/13
lxxxxviii	May 28/24	3-1.2	May 28/24
lxxxxix	May 28/24	3-2	Jul 31/12
xc	May 28/24	3-3	Jul 31/12
xci	May 28/24	3-4	Jul 31/12
xcii	May 28/24	3-5	May 28/24
xciii	May 28/24	3-6	May 28/24
xciv	May 28/24	3-7	Jul 31/12
xcv	May 28/24	3-8	Dec 20/13
xcvi	May 28/24	3-9	Jul 31/12
xcvii	May 28/24	3-10	May 28/24
xcviii	May 28/24	3-11	May 28/24
xcix	May 28/24	3-12	May 28/24
c	May 28/24	3-13	May 28/24
ci	May 28/24	3-14	May 28/24
cii	May 28/24	3-15	May 28/24
ciii	May 28/24	3-15.1	May 28/24
civ	May 28/24	3-15.2	May 28/24
cv	May 28/24	3-16	Dec 20/13
cvi	May 28/24	3-17	Jul 31/12
cvii	May 28/24	3-18	Jul 31/12
cviii	May 28/24	3-19	Jul 22/2020
cix	May 28/24	3-20	Jul 22/2020
cx	May 28/24	3-21	Jul 31/12
cxi	May 28/24	3-22	Oct 30/15
cxii	May 28/24	3-23	Oct 30/15
cxiii	May 28/24	3-23.1	Oct 30/15
cxiv	May 28/24	3-23.2	Oct 30/15
cxv	May 28/24	3-24	Jul 31/12
cxiv	May 28/24	3-25	Dec 3/19

EFFECTIVE PAGE LIST

Page	Date	Page	Date
3-25.1	Feb 1/13	3-53	Jul 31/12
3-25.2	Feb 1/13	3-54	Jul 31/12
3-25.3	Feb 1/13	▌3-55	May 28/24
▌3-25.4	May 28/24	3-56	Sep 2/16
▌3-25.5	May 28/24	▌3-57	May 28/24
▌3-25.6	May 28/24	3-58	Jul 31/12
▌3-25.6.1	May 28/24	3-59	Dec 3/19
▌3-25.6.2	May 28/24	3-60	Sep 2/16
3-25.7	Feb 1/13	3-61	Jul 31/12
▌3-25.8	May 28/24	3-62	Dec 20/13
3-25.9	Feb 1/13	3-63	Jul 31/12
3-25.10	Feb 1/13	3-64	Sep 2/16
▌3-25.11	May 28/24	3-65	Jul 31/12
▌3-25.12	May 28/24	3-66	Sep 2/16
▌3-25.13	May 28/24	3-67	Sep 2/16
3-25.14	Feb 1/13	3-68	Dec 3/19
3-26	Feb 1/13	3-69	Jul 31/12
3-27	Feb 1/13	3-70	Jul 31/12
▌3-28	May 28/24	▌3-71	May 28/24
3-29	Jul 31/12	3-72	Jul 31/12
3-30	Feb 1/13	3-73	Jul 31/12
▌3-31	May 28/24	▌3-74	May 28/24
3-32	Oct 30/15	3-75	Feb 1/13
▌3-33	May 28/24	▌3-76	May 28/24
▌3-34	May 28/24	▌3-77	May 28/24
▌3-35	May 28/24	▌3-78	May 28/24
3-36	Sep 2/16	▌3-79	May 28/24
3-37	Jul 22/2020	3-80	Sep 2/16
3-38	Sep 2/16	▌3-81	May 28/24
3-39	Sep 2/16	▌3-82	May 28/24
3-40	Jul 31/12	▌3-83	May 28/24
3-41	Oct 30/15	▌3-84	May 28/24
3-42	Oct 30/15	▌3-85	May 28/24
3-43	Jul 31/12	▌3-86	May 28/24
3-44	Sep 2/16	▌3-87	May 28/24
3-45	Jul 31/12	▌3-88	May 28/24
3-46	Jul 31/12	▌3-89	May 28/24
3-47	May 9/18	▌3-90	May 28/24
3-48	Jul 31/12	▌3-91	May 28/24
3-49	Dec 3/19	▌3-92	May 28/24
3-50	Dec 3/19	4-1	Nov 16/01
3-51	Oct 30/15	4-1.1	Dec 20/13
3-52	Jul 31/12	4-1.2	Nov 28/22

EFFECTIVE PAGE LIST

Page	Date	Page	Date
4-2	Jan 30/12	5-21	Nov 28/22
4-3	May 28/24	5-22	Nov 28/22
4-3.1	May 28/24	5-23	Nov 28/22
4-3.2	May 28/24	5-24	Nov 28/22
4-4	Oct 30/15	5-25	Feb 1/13
4-5	May 28/24	5-26	Feb 1/13
4-6	May 28/24	5-27	May 9/18
4-7	May 28/24	5-28	Nov 28/22
4-8	Jul 31/12	5-29	Feb 1/13
4-9	Oct 30/15	5-30	Nov 28/22
4-10	Jul 31/12	5-31	Nov 28/22
4-11	May 28/24	5-32	Feb 1/13
4-12	May 28/24	5-33	Feb 1/13
4-13	Jul 31/12	5-34	Feb 1/13
4-14	Jul 31/12	5-35	Dec 20/13
4-15	May 28/24	5-36	Dec 20/13
4-16	May 28/24	5-37	Dec 20/13
4-17	May 28/24	5-38	Dec 20/13
4-18	Jul 31/12	5-39	Feb 1/13
4-19	Oct 30/15	5-40	Feb 1/13
4-20	Jul 31/12	5-41	Oct 30/15
5-1	Nov 16/01	5-42	Feb 1/13
5-1.1	Dec 20/13	5-43	Feb 1/13
5-1.2	Nov 28/22	5-44	Feb 1/13
5-2	Nov 28/22	5-45	Feb 1/13
5-3	Nov 28/22	5-46	Oct 30/15
5-4	May 28/24	5-47	Oct 30/15
5-5	May 28/24	5-48	Feb 1/13
5-6	May 28/24	5-49	Feb 1/13
5-7	Nov 28/22	5-50	May 9/18
5-8	May 28/24	5-51	Oct 30/15
5-9	Nov 28/22	5-52	Feb 1/13
5-10	May 28/24	6-1	Nov 16/01
5-11	May 28/24	6-1.1	Dec 20/13
5-12	May 28/24	6-1.2	Nov 28/22
5-13	May 28/24	6-2	Sep 27/18
5-14	May 9/18	6-3	Dec 15/10
5-15	Oct 30/15	6-4	Nov 16/01
5-16	Feb 1/13	6-5	Sep 27/18
5-17	Oct 30/15	6-6	Sep 27/18
5-18	Oct 30/15	6-7	May 28/24
5-19	Feb 1/13	6-8	May 28/24
5-20	Nov 28/22	6-9	May 28/24

EFFECTIVE PAGE LIST

Page	Date	Page	Date
6-10	May 28/24	6-38	Dec 20/13
6-11	May 28/24	6-39	May 28/24
6-11.1	Jul 22/2020	6-40	May 28/24
6-11.2	Oct 30/15	6-41	May 28/24
6-11.3	May 28/24	6-41.1	May 28/24
6-11.4	Sep 27/18	6-42	Sep 27/18
6-11.5	Jul 22/2020	6-43	May 28/24
6-11.6	May 28/24	6-44	May 28/24
6-11.7	May 28/24	6-45	May 28/24
6-11.8	May 28/24	6-46	Feb 1/13
6-12	Jan 30/12	6-47	May 28/24
6-13	May 28/24	6-48	Dec 20/13
6-14	Dec 3/19	6-49	May 28/24
6-15	Dec 3/19	6-50	May 28/24
6-16	Dec 3/19	6-51	Jan 30/12
6-17	May 28/24	6-52	Oct 30/15
6-17.1	May 28/24	6-52.1	Oct 30/15
6-17.2	May 28/24	6-53	Oct 30/15
6-17.3	May 28/24	6-53.1	Oct 30/15
6-17.4	May 28/24	6-54	Jan 30/12
6-18	May 28/24	6-55	Oct 30/15
6-19	Feb 1/13	6-56	Oct 30/15
6-19.1	May 28/24	7-1	Aug 13/07
6-19.2	May 28/24	7-1.1	Dec 20/13
6-20	Oct 30/15	7-1.2	Nov 28/22
6-21	May 28/24	7-2	Oct 30/15
6-22	Jan 30/12	7-2.1	Oct 30/15
6-23	Sep 2/16	7-2.2	May 28/24
6-24	Sep 2/16	7-2.3	May 28/24
6-25	Sep 2/16	7-3	Dec 20/13
6-26	Sep 2/16	7-3.1	May 9/18
6-27	Oct 30/15	7-3.2	May 9/18
6-28	Jan 30/12	7-3.3	Oct 30/15
6-29	Dec 3/19	7-4	Aug 13/07
6-30	Jan 30/12	7-5	Oct 30/15
6-31	Dec 3/19	7-6	Dec 3/19
6-32	Jan 30/12	7-7	Oct 30/15
6-33	Oct 30/15	7-8	Oct 30/15
6-34	May 28/24	7-9	Nov 16/01
6-35	Sep 2/16	7-10	Nov 16/01
6-35.1	Oct 30/15	7-11	Jan 30/12
6-36	Jul 29/11	7-12	Sep 27/18
6-37	Jul 31/12	7-13	Nov 16/01

EFFECTIVE PAGE LIST

Page	Date	Page	Date
7-14	Dec 20/13	8-7	Oct 30/15
7-15	Sep 27/18	8-8	Jul 22/2020
7-16	Sep 27/18	8-9	May 9/18
7-17	Nov 11/02	8-10	Jul 31/12
7-18	Feb 1/13	8-11	Feb 1/13
7-19	Sep 2/16	8-12	Sep 2/16
7-20	Sep 2/16	▌8-13	May 28/24
7-20.1	Nov 11/02	▌8-14	May 28/24
7-20.2	Feb 1/13	▌8-15	May 28/24
7-21	Sep 2/16	8-16	Jul 13/05
7-22	Aug 13/07	8-17	Jan 30/12
7-23	Jan 30/12	8-18	Jul 13/05
7-24	Oct 30/15	▌8-19	May 28/24
7-25	Dec 3/19	▌8-20	May 28/24
▌7-26	May 28/24	8-21	Aug 13/07
7-26.1	Jul 22/2020	8-22	Jan 30/12
7-26.2	Oct 30/15	8-23	Dec 3/19
7-26.3	Dec 3/19	8-24	Jan 30/12
▌7-26.4	May 28/24	8-25	Jul 22/2020
7-27	Nov 16/01	8-26	Jul 22/2020
7-27.1	Dec 3/19	9-1	Nov 16/01
7-27.2	Dec 3/19	9-1.1	Dec 20/13
7-28	Dec 3/19	9-1.2	Nov 28/22
7-29	Dec 3/19	9-2	Feb 1/13
▌7-30	May 28/24	9-2.1	Feb 1/13
▌7-31	May 28/24	9-2.2	Jul 31/12
▌7-31.1	May 28/24	▌9-3	May 28/24
7-31.2	Dec 3/19	▌9-4	May 28/24
7-32	Aug 13/07	▌9-5	May 28/24
7-33	Oct 30/15	▌9-6	May 28/24
7-34	Oct 30/15	9-7	Jul 31/12
7-35	Oct 30/15	9-8	May 9/18
7-36	Oct 30/15	▌9-9	May 28/24
7-37	Jul 22/2020	▌9-10	May 28/24
7-38	Jul 22/2020	▌9-11	May 28/24
8-1	Jul 13/05	9-12	Feb 1/13
8-1.1	Dec 20/13	9-13	Sep 27/18
8-1.2	Nov 28/22	9-14	May 9/18
8-2	Oct 30/15	9-15	Nov 16/01
8-3	Oct 30/15	9-16	Oct 30/15
8-4	Nov 28/22	▌9-17	May 28/24
8-5	Nov 28/22	▌9-17.1	May 28/24
8-6	Oct 30/15	9-17.2	Jan 30/12

EFFECTIVE PAGE LIST

Page	Date	Page	Date
9-18	Oct 30/15	▌9-47	May 28/24
9-19	Oct 30/15	▌9-47.1	May 28/24
9-19.1	Jul 31/12	9-47.2	Oct 30/15
9-19.2	Jul 31/12	9-48	Nov 28/22
9-20	Feb 1/13	9-49	Sep 27/18
9-21	May 9/18	▌9-50	May 28/24
9-21.1	May 9/18	▌9-51	May 28/24
9-21.2	Jul 29/11	▌9-52	May 28/24
9-22	Feb 1/13	10-1	Nov 16/01
9-23	Oct 30/15	10-1.1	Dec 20/13
9-23.1	Oct 30/15	▌10-1.2	May 28/24
9-23.2	Oct 30/15	10-2	Sep 2/16
9-23.3	Oct 30/15	10-3	Sep 2/16
9-23.4	Jan 30/12	10-4	Jul 31/12
9-23.5	Oct 30/15	10-5	Jul 31/12
9-23.6	Oct 30/15	10-6	Nov 28/22
9-23.7	Oct 30/15	10-7	Nov 28/22
9-23.8	Oct 30/15	10-8	Sep 2/16
9-24	Nov 16/01	10-9	Sep 2/16
9-25	Dec 3/19	10-10	Jul 31/12
9-26	Dec 20/13	10-11	Jul 31/12
9-27	Nov 16/01	10-12	Jul 31/12
9-28	Nov 16/01	10-13	Feb 1/13
9-29	Jul 29/11	10-14	Nov 28/22
9-30	Nov 16/01	10-15	Jul 13/05
9-31	Oct 30/15	10-16	Sep 2/16
9-32	Sep 2/16	10-17	Sep 2/16
9-33	Sep 2/16	10-18	Jul 31/12
9-33.1	Dec 20/13	10-19	Jul 31/12
9-33.2	Dec 20/13	10-20	Jan 30/12
9-34	Dec 15/10	10-21	Nov 28/22
▌9-35	May 28/24	10-22	Sep 2/16
▌9-36	May 28/24	10-23	Sep 2/16
▌9-37	May 28/24	10-24	Sep 2/16
9-38	Dec 3/19	10-24.1	Oct 30/15
9-39	Jul 22/2020	10-25	Sep 2/16
9-40	Oct 30/15	10-26	Sep 2/16
9-41	Oct 30/15	10-27	Sep 2/16
9-42	Oct 30/15	10-28	Sep 2/16
9-43	Oct 30/15	10-29	Nov 28/22
▌9-44	May 28/24	10-29.1	Sep 2/16
▌9-45	May 28/24	10-30	Jul 31/12
▌9-46	May 28/24	10-31	Nov 28/22

EFFECTIVE PAGE LIST

Page	Date	Page	Date
10-32	Jul 31/12	10-75	Oct 30/15
10-33	Nov 28/22	10-76	Jul 31/12
10-34	Jul 31/12	10-77	Oct 30/15
10-35	Feb 1/13	10-78	Jul 22/2020
10-36	Jul 31/12	10-79	Jul 22/2020
▌10-37	May 28/24	10-80	Oct 30/15
10-38	Jul 31/12	10-81	Oct 30/15
10-39	Jul 31/12	10-82	Oct 30/15
10-40	Jul 31/12	10-83	Oct 30/15
▌10-41	May 28/24	▌10-83.1	May 28/24
▌10-42	May 28/24	▌10-83.2	May 28/24
▌10-43	May 28/24	10-84	Feb 1/13
10-44	Jul 31/12	10-85	Feb 1/13
▌10-45	May 28/24	10-86	Feb 1/13
10-46	Sep 2/16	10-86.1	Feb 1/13
10-47	Jul 31/12	10-86.2	Feb 1/13
10-48	Jul 31/12	10-86.3	Oct 30/15
▌10-49	May 28/24	10-86.4	Oct 30/15
▌10-50	May 28/24	10-86.5	Feb 1/13
▌10-51	May 28/24	10-86.6	Oct 30/15
▌10-52	May 28/24	10-86.7	Feb 1/13
10-53	Jul 31/12	10-86.8	Oct 30/15
10-54	Jul 31/12	10-87	Jul 31/12
10-55	Dec 20/13	10-88	Jul 31/12
10-56	Jul 31/12	10-89	Oct 30/15
10-57	Jul 31/12	10-90	May 9/18
10-58	Jul 31/12	10-91	Jul 31/12
10-59	Dec 3/19	10-92	May 9/18
10-60	Oct 30/15	10-93	Jul 31/12
10-61	Jul 31/12	10-94	Jul 31/12
▌10-62	May 28/24	10-95	Jul 31/12
▌10-63	May 28/24	10-96	Oct 30/15
10-64	Oct 30/15	10-97	Jul 31/12
10-65	Jul 31/12	10-98	Jul 31/12
10-66	Jul 31/12	10-99	Jul 31/12
10-67	Jul 31/12	10-100	Dec 20/13
10-68	Jul 31/12	10-101	Dec 3/19
10-69	Feb 1/13	10-102	Dec 3/19
10-70	Oct 30/15	10-103	Jul 31/12
10-71	Oct 30/15	10-104	Jul 31/12
10-72	Jul 31/12	10-105	May 9/18
10-73	Dec 20/13	10-106	Jul 31/12
10-74	Jul 31/12	10-107	May 9/18

EFFECTIVE PAGE LIST

Page	Date	Page	Date
10-108	Jul 31/12	11-13	Jan 30/12
10-109	May 9/18	11-14	Dec 3/19
▌10-110	May 28/24	11-15	Jan 30/12
▌10-111	May 28/24	11-16	Aug 16/13
▌10-112	May 28/24	11-17	Jan 30/12
▌10-113	May 28/24	▌11-18	May 28/24
10-114	Jul 31/12	▌11-19	May 28/24
10-115	Jul 31/12	11-20	Jan 30/12
10-116	Feb 1/13	11-21	Oct 30/15
10-117	Jul 31/12	11-22	Jul 22/2020
10-118	Jul 31/12	11-23	Oct 30/15
10-119	Oct 30/15	11-24	Jul 31/12
10-120	Feb 1/13	A-1	Jan 30/12
10-121	Feb 1/13	A-2	Sep 20/13
10-122	Feb 1/13	A-3	Nov 28/22
10-123	Feb 1/13	A-4	Oct 30/15
10-124	Oct 30/15	A-5	Oct 30/15
10-125	Jul 31/12	A-6	Dec 3/19
10-126	Oct 30/15	A-7	Dec 3/19
10-127	Jul 31/12	A-8	Sep 20/13
10-128	Jul 31/12	▌B-1	May 28/24
10-129	Jul 31/12	▌B-2	May 28/24
10-130	Jul 31/12	▌B-3	May 28/24
10-131	Jul 31/12	▌B-4	May 28/24
10-132	Jul 31/12	▌B-5	May 28/24
10-133	Jul 31/12	▌B-6	May 28/24
10-134	Jul 31/12	▌B-7	May 28/24
11-1	Nov 16/01	▌B-8	May 28/24
11-1.1	Dec 20/13	▌B-9	May 28/24
11-1.2	Nov 28/22	▌B-10	May 28/24
11-2	Nov 16/01	▌B-11	May 28/24
11-3	Oct 30/15	▌B-12	May 28/24
11-4	Oct 30/15	▌B-13	May 28/24
▌11-5	May 28/24	▌B-14	May 28/24
▌11-6	May 28/24	▌B-15	May 28/24
11-7	Nov 16/01	▌B-16	May 28/24
11-8	Jul 31/12		
▌11-9	May 28/24		
▌11-9.1	May 28/24		
11-9.2	Jul 31/12		
11-10	Nov 16/01		
▌11-11	May 28/24		
11-12	Jan 30/12		

PART NUMBER INDEX

Part Number	Figure	Item
008-00041-0001	10-36	–
010-00188-03	10-37	10
01-0770028-05	10-30	1
01-0770119-15	10-1	31
01-0770119-15	10-2	31
01-0770119-15	10-3	24
01-0770119-15	10-4	26
01-0770119-15	10-5	5
01-0770119-15	10-6	5
01-0771424-20	10-28	5
01-0790006-01	10-30	4
01-0790006-01	10-31	–
01-0790006-01	3-8	26
01-0790006-01	App A	–
01-0790006-03	10-30	4
01-0790006-03	10-31	–
01-0790006-03	3-8	25
01-0790006-03	App A	–
01-0790340-03	10-30	4
01-0790340-03	10-32	10
01-0790340-03	3-8	26
01-0790340-04	10-30	4
01-0790340-04	10-32	11
01-0790340-04	3-8	25
01-1030-H-A-P	10-29	40
01-1030-H-A-P Rev A	10-29	40
01-1030-H-A-P Rev B	10-29	40
01-1030-H-A-P Rev C	10-29	40
01-691-04	9-15	27
01-691-05	9-13	10
02-0250276-00	10-31	8
02-0250276-00	App A	–
02-0350259-00	10-31	1
02-0350259-00	App A	–
02-0350260-00	10-31	3
02-0350260-00	App A	–
020-986-001	5-3	20
030-01094-0077	10-36	–
030-01107-0048	10-36	–
034921-01	5-12	–
038088-08	6-9	35
038088-08-80	6-9	35
0402-005	6-1	16
047-05860-0001	10-36	–
050-01780-0003	10-36	6
0660-1055-0071	10-36	1
089-02013-0037	10-36	–
089-02051-0024	10-36	–
089-02191-0022	10-36	–
089-02353-0001	10-36	–
089-05903-0007	10-36	–
089-05907-0012	10-36	–
089-06012-0008	10-36	–
08DU	App A	–
08DU08	9-11	15
091-00072-0003	10-36	–
09-DU-12	9-3	22
#1	5-5	55
1-480319-0	6-1	–
1/2 X8	App A	–
1/2 X 8 PK	3-2	–
1/4 Harper	3-6.1	100
1/4 Harper	3-23	400
1/4 Harper	6-12	30
1/4 Harper	8-7	27
1/4 Harper	9-10	3
1/4 Harper	9-8	10
1/4 Harper	9-8	21
1/8 X 832	11-5	90
1/8 X 832	5-8	–
1/8X832	5-11	290
10065	App A	–

PART NUMBER INDEX

Part Number	Figure	Item
102	3-3	–
102-00007	7-8	38
102-00007	7-8.1	34
1040	10-1	5
1040	10-2	5
1040	10-3	5
1040	10-4	5
1053	11-1	27
105CPOLYKEN	3-19	–
10-796-00	11-4	14
10-796-00	11-5	340
▌108FR	3-19	–
10-DU-10	6-7.2	21
10-DU-10	9-4	3
10-DU-10	9-4	5
1102	7-8	27
1102	7-8.1	24
11052	7-2	5
11052	7-2	5
1117067-05	3-18	29
1117067-07	3-18	28
1157	11-6	40
11-691-04	9-15	24
11-691-05	9-13	14
1-172165-9	10-4	32
11TS15-2	10-1	23
11TS15-2	10-2	23
11TS15-2	10-7	2
11TS15-2	10-8	2
11TS15-2	10-9	2
11TS15-2	10-9	2
1219-4200-Z3Y	3-2	–
1219-4200-Z3Y	3-2	–
1219-4200-Z3Y	3-2	–
1219-4200-Z3Y	3-2	–
1219-4200-Z3Y	6-11	18
1219-4200-Z3Y	6-12	20
1219-4200-Z3Y	App A	–
1238716	5-2	260
124F003-4CR0210	6-1	64
12500750-125B	8-5	14
13241-LDS	7-8	25
▌1357	3-23	–
13AT401-T2	9-6	30
13AT401-T2	9-7	24
13AT401-T2	9-7.1	14
13AT401-T2	9-7.2	14
14-0050508-27	10-32	9
14399-001	10-1	18
14399-001	10-2	18
14399-001	10-3	18
14399-001	10-4	18
14399-002	10-1	17
14399-002	10-2	17
14399-002	10-3	17
14399-002	10-4	17
14399-003	10-1	16
14399-003	10-2	16
14399-003	10-3	16
14399-003	10-4	16
1-480303-0	10-37	80
1-480305-0	10-37	90
1-480318-0	10-1	–
1-480318-0	10-1	–
1-480318-0	10-1	–
1-480318-0	10-1	–
1-480318-0	10-2	–
1-480318-0	10-2	–
1-480318-0	10-2	–
1-480318-0	10-2	–
1-480318-0	10-3	–
1-480318-0	10-3	–
1-480318-0	10-4	–

PART NUMBER INDEX

Part Number	Figure	Item
1-480318-0	10-4	–
1-480319-0	10-1	–
1-480319-0	10-1	–
1-480319-0	10-1	–
1-480319-0	10-1	–
1-480319-0	10-2	–
1-480319-0	10-2	–
1-480319-0	10-2	–
1-480319-0	10-2	–
1-480319-0	10-29	–
1-480319-0	10-3	–
1-480319-0	10-3	–
1-480319-0	10-4	–
1-480319-0	10-4	–
1-480319-0	5-7	–
1-480319-0	7-9	–
1-480424-0	6-7.3	70
1-480426-0	10-18	–
14809	7-1	2
14809	7-1.1	12
14809	App A	–
1495	10-1	–
150SG1009-5	6-1	–
150SG1009-5	6-1	–
150SG1040	6-1	53
150SG1040	6-1	53
150SG1108	6-1	52
150SG1108	6-1	52
150SG117Q-3	6-1	51
150SG117Q-3-1	6-1	51
150SG117Q-4	6-1	51
150SG117Q-4-1	6-1	51
1539-001	7-11	14
1540	7-8	–
1540	7-8.1	–
1-604102-1	10-18	–
1-604102-1	10-18	–
1-604102-1	10-19	–
16-1	8-7	30
1637-B	7-10	10
1637-B	8-1	35
1637-B	8-2	39
1637-B	9-12	12
1641-B	8-1	28
1641-B	8-3	20
1641-B	9-11	6
1641-B	9-13	3
1650	8-3	20
1650	8-7	21
16DU16	9-12	4
170363-1	10-17	19
170363-1	10-4	33
170364-1	10-17	19
1-72165-9	10-17	18
172233-1	10-17	18
17240	App A	–
1740001-01	6-9	34
1741125	6-9	–
1743629-01	5-12	–
1743640-01	5-12	60
1743645-01	5-12	–
1743645-02	5-12	70
1756-2	10-14	7
18-200	10-1	–
18-200	10-2	–
18-200	10-3	–
18-200	10-4	–
18-200	10-4	–
18-200	10-4	–
18-200	10-4	–
18-215	10-1	–
18-215	10-2	–
18-215	10-3	–

PART NUMBER INDEX

Part Number	Figure	Item
18-215	10-4	–
18-215	10-4	–
18-215	10-4	–
18-215	10-4	–
18-DU-12	9-6	8
18-DU-12	9-7	8
18050-42	7-9	28
1/8 X 1/16 FG-S	7-9	–
1911-B	7-4	9
1911-B	7-6	14
1911-B	7-6.1	13
1911-B	8-1	34
19-170049-009	10-31	12
19-170049-009	App A	–
19-170049-010	10-32	8
19754	8-2	43
1B7536	7-8	5
1SE1	10-23	7
1SE1	6-1	87
2/0	6-3	66
2000653-001	11-6	50
20012S	6-1	47
20020S	4-5	–
20020S	4-5	–
20020S	4-5	–
20020S	4-5	–
20020S	4-5	–
20044S	6-1	105
2-008-S604-70	10-25	–
2-008-S604-70	10-25	–
2-011	10-27	10
2-015	4-4	30
2-018	7-11	4
▌2-025 E515-80	8-5	4
▌2-025 E515-80	8-5	11
2-029	7-9	21
2-029	8-3	14
2-032	8-2	45
2-041	7-1	10
20526	7-6	11
20526	7-6.1	10
20526	App A	–
206-061-505-003	6-9	1
208	7-4	8
210A155	9-3	8
2-131	4-4	15
2-133	8-3	15
2-137	8-5	15
2-141	7-1	8
2-141	7-1.1	17
2-141	7-2	4
2-141	7-2	4
218-901-019	10-2	9
219N04X02	10-34	1
21FA-540	7-11	13
21FA-540	7-8	–
21FA-540	7-9	–
2-212	8-2	23
2212000	10-4	–
2-218	4-4	5
22-370-150	10-16	8
22-370-150	10-17	9
22-370-200	10-17	9
229001	10-10	–
229001	11-6	–
229001	11-6	–
229001	11-6	–
229002	10-10	–
229003	10-10	–
229007	10-10	–
22NA17A-02	3-13	31
22NA1-82	3-8	39
22NA1-82BC	3-8	40

PART NUMBER INDEX

Part Number	Figure	Item	Part Number	Figure	Item
22NA27-22-02	10-13	5	267-1000–002	10-1	9
22NA27-22-02	6-3	46	267-1000–002	10-2	9
22-NA27-68-02	10-13	5	268N 4X2	App A	–
23052351	6-1	–	268N04X02	10-34	1
23052363	3-20	90	268N04X02	App A	–
23053995	7-1	16	268-N-04X02	App A	–
23053995	7-2	10	269N 4X2	App A	–
23054604	6-1	23	269N04X02	10-34	5
23063426	6-1	41	269-N-04X02	App A	–
23064565	6-1	60	269-N-04X04	10-27	6
23113DH	5-8	38	27539	7-4	6
23121DH	5-8	6	27539	7-5	11
2335-265	10-20	12	28-00014-1	3-20	10
23S-094-075	3-6	100	28-00015-1	3-20	100
24004-71-71	11-6	120	28-01041-3	6-10	22
24004TR71	11-6	180	280-114508-11	3-2	11
24914	7-4	3	28-11121-4	10-33	10
24914	7-5	3	28-11121-4	10-33	19
2523184	6-6	19	28-11121-7	10-33	6
259 N4	App A	–	28-11215-1	3-9	17
259N04	10-27	5	28-11215-11	3-9	17
259N04	10-34	2	28-11217-1	3-9	16
259N04	App A	–	28-11217-3	3-9	16
259-N-04X02	App A	–	28-11227-13	3-13	5
261N04X02	10-34	–	28-11227-13	3-13	10
261N04X02	10-34	–	28-11227-15	3-13	6
262N4	10-27	–	28-11227-15	3-13	8
262N4	10-27	–	28-11227-17	3-13	6
262N4	10-27	–	28-11227-19	3-13	–
264N 4	App A	–	28-11227-19	3-13	–
264N04	10-34	3	28-11227-21	3-13	8
264N04	App A	–	28-11227-23	3-13	–
264-N-04X02	App A	–	28-11227-23	3-13	–
264N4	10-27	4	28-11231-11	3-13	–
265N 4	App A	–	28-11233-1	3-13	15
265N04	App A	–	28-11233-13	3-13	–
265-N-04X02	App A	–	28-11233-5	3-13	18

PART NUMBER INDEX

Part Number	Figure	Item	Part Number	Figure	Item
28-11236-11	3-13	19	28-125	10-11	3
28-11236-13	3-13	13	28-13005-1	7-7	2
28-11236-15	3-13	12	28-13107-15	7-8	18
28-11236-17	3-13	20	28-13107-15	7-8.1	15
28-11236-19	3-13	22	28-13120-1	7-8	7
28-11236-21	3-13	14	28-13120-1	7-8.1	4
28-11237-11	3-13	33	28-13122-3	7-8.2	10
28-11237-11	3-8	38	28-13122-993	7-8.2	–
28-11238-1	3-13	23	28-13137-11	7-8	26
28-11238-11	3-13	–	28-13142-1	7-6	6
28-11238-13	3-13	26	28-13142-1	7-8	–
28-11239-1	3-13	1	28-13145-1	7-11	–
28-11239-101	3-13	11	28-13145-1	8-5	30
28-11239-29	3-13	–	28-13146-1	7-8	–
28-11239-3	3-13	7	28-13146-1	7-8.1	–
28-11239-31	3-13	–	28-13148-1	7-8	12
28-11239-31	3-13	–	28-13148-1	7-8.1	9
28-11239-35	3-13	–	28-13149-1	7-8	13
28-11239-35	3-13	–	28-13149-1	7-8.1	10
28-11239-37	3-13	–	28-13152-11	7-8	–
28-11239-39	3-13	–	28-13152-11	7-8.1	–
28-11239-9	3-13	9	28-13152-13	7-8	31
28-11241-13	3-13	–	28-13152-13	7-8.1	28
28-11241-3	3-13	21	28-13180-11	7-6	8
28-11711-15	3-4	150	28-13180-11	7-6.1	7
28-11711-15	3-4	170	28-13184-11	7-6	15
28-11712-15	3-4	80	28-13184-11	7-6.1	14
28-11714-11	3-4	220	28-13322-11	7-6	12
28-11715-11	3-3	10	28-13322-11	7-6.1	11
28-12319-1	3-2	–	28-13323-11	7-6	10
28-12319-1	3-2	–	28-135003-11	7-11	3
28-12356-1	6-2	2	28-13511-11	7-11	21
28-12400-23	6-1	73	28-13511-13	7-11	21
28-12420-15	5-12	160	28-13515-3	7-11	5
28-12429-9	5-2	410	28-13525-9	7-11	1
28-12460-1	5-12	120	28-13531-11	7-11	16
28-12460-1	5-9	–	28-13532-11	7-11	19

PART NUMBER INDEX

Part Number	Figure	Item
28-13605-4	7-10	11
28-13605-5	7-10	11
28-13605-6	7-10	11
28-13605-7	7-10	11
28-13605-8	7-10	11
28-13607-1	7-11	22
28-13611-13	7-10	6
28-13611-15	7-10	6
28-13621-13	6-10	25
28-13621-13	7-10	17
28-14004-1	8-1	40
28-14004-1	8-2	47
28-14006-11	8-1	30
28-14006-11	8-2	35
28-14006-13	8-1	30
28-14006-13	8-2	35
28-14006-15	8-1	30
28-14006-15	8-2	35
28-14006-17	8-1	30
28-14006-17	8-2	35
28-14006-19	8-1	30
28-14006-19	8-2	35
28-14006-3	8-1	30
28-14006-3	8-2	35
28-14006-5	8-1	30
28-14006-5	8-2	35
28-14006-7	8-1	30
28-14006-7	8-2	35
28-14006-9	8-1	30
28-14006-9	8-2	35
28-14007-3	8-3	38
28-14008-1	8-1	39
28-14008-1	8-2	46
28-14009-1	8-1	37
28-14009-1	8-2	42
28-14009-10	8-2	42
28-14009-15	8-2	42
28-14009-2	8-1	37
28-14009-2	8-2	42
28-14009-3	8-1	37
28-14009-3	8-2	42
28-14009-5	8-1	37
28-14009-5	8-2	42
28-14019-10	8-4	3
28-14019-3	8-4	3
28-14019-5	8-4	3
28-14019-6	8-4	3
28-14019-7	8-4	3
28-14019-8	8-4	3
28-14100-9	8-3	37
28-14109-1	8-3	59
28-14110-1	8-3	–
28-14110-2	8-3	–
28-14110-3	8-3	–
28-14117-1	8-1	22
28-14117-11	8-1	22
28-14117-13	8-2	26
28-14119-11	8-3	–
28-14141-13-Kit	8-3	58
28-14141-913	8-3	58
28-14202-1	8-1	4
28-14202-1	8-2	4
28-14207-101	9-13	1
28-14207-9	9-13	1
28-14219-3	8-1	–
28-14219-5	8-2	–
28-14219-7	8-1	–
28-14219-901	8-1	–
28-14219-903	8-2	–
28-14223-1	8-1	11
28-14223-1	8-2	11
28-14224-1	8-1	7
28-14224-1	8-2	7
28-14224-3	8-1	15

PART NUMBER INDEX

Part Number	Figure	Item	Part Number	Figure	Item
28-14224-5	8-1	15	28-14261-1	8-3	10
28-14224-5	8-2	15	28-14262-1	9-13	4
28-14227-1	8-1	20	28-14265-3	8-5	10
28-14227-1	8-2	24	28-14270-1	8-3	19
28-14227-11	8-4	6	28-14276-1	8-5	2
28-14228-1	8-1	19	28-14277-1	8-5	3
28-14231-1	8-3	5	28-14278-1	8-3	46
28-14233-3	8-4	1	28-14279-3	8-3	18
28-14234-901	8-3	1	28-14280-3	8-1	9
28-14234-909	8-3	–	28-14280-5	8-1	9
28-14235-1	8-1	38	28-14280-5	8-2	9
28-14236-1	8-1	24	28-14281-3	8-1	13
28-14236-1	8-1	29	28-14281-5	8-1	13
28-14236-1	8-2	28	28-14281-5	8-2	13
28-14236-1	8-2	34	28-14282-13	8-3	1
28-14236-1	8-4	4	28-14283-1	8-3	41
28-14239-1	8-3	34	28-14290-3	8-1	12
28-14239-5	8-3	34	28-14290-3	8-2	12
28-14240-1	8-3	2	28-14290-5	8-1	12
28-14244-1	8-1	8	28-14290-5	8-2	12
28-14244-1	8-2	8	28-14290-7	8-1	12
28-14250-1	8-1	–	28-14290-7	8-2	12
28-14250-1	8-2	–	28-14290-9	8-1	12
28-14250-1	9-13	23	28-14290-9	8-2	12
28-14250-3	9-13	24	28-14293-11	8-3	22
28-14251-1	8-1	25	28-14293-13	8-3	22
28-14251-1	8-2	29	28-14293-7	8-3	22
28-14251-2	8-1	26	28-14293-9	8-3	22
28-14251-2	8-2	30	28-14311-1	8-3	7
28-14252-1	8-1	10	28-14313-1	8-3	13
28-14252-1	8-1	14	28-14320-15	8-3	21
28-14256-1	8-1	31	28-14335-1	8-3	23
28-14256-1	8-2	36	28-14356-5	8-5	–
28-14257-1	8-1	32	28-14357-3	8-5	1
28-14257-1	8-2	37	28-14357-5	8-5	1
28-14259-1	8-6	7	28-14358-4	8-5	5
28-14259-3	9-13	20	28-14358-4	8-5	12

PART NUMBER INDEX

Part Number	Figure	Item	Part Number	Figure	Item
28-14359-11	8-1	10	28-150001-9	8-7	19
28-14359-11	8-2	10	28-150044-5	8-7	20
28-14359-15	8-5	2	28-150055-1	8-7	14
28-14359-17	8-5	3	28-150055-13	8-7	14
28-14359-19	8-1	14	28-150055-15	8-7	14
28-14359-19	8-2	14	28-150060-11	8-7	11
28-14366-1	8-5	21	28-150063-11	8-7	12
28-14367-7	8-5	22	28-150063-13	8-7	12
28-14368-2	7-8	29	28-150067-15	8-7	2
28-14368-2	7-8.1	26	28-150074-11	8-7	1
28-14368-2	8-5	23	28-150074-13	8-7	1
28-14369-1	8-5	27	28-150076-1	8-7	9
28-14370-17	8-5	6	28-150076-13	8-7	7
28-14374-13	8-5	29	28-150076-15	8-7	4
28-14374-15	8-5	29	28-150076-17	8-7	3
28-14375-103	8-5	–	28-150076-19	8-7	6
28-14375-107	8-5	–	28-150078-10	8-7	8
28-14375-906	8-5	–	28-150078-12	8-7	8
28-14375-907	8-5	–	28-150078-13	8-7	8
28-14375-908	8-5	–	28-150078-15	8-7	8
28-14381-1	8-3	–	28-150079-7	8-7	–
28-14381-3	8-3	–	28-150079-901	8-7	–
28-14381-901	8-3	28	28-15030-1	8-7	29
28-14381-902	8-3	26	28-15033-1	8-7	18
28-14381-903	8-3	1	28-15033-11	8-7	18
28-14382-19	8-3	32	28-15033-15	8-7	18
28-14382-21	8-3	27	28-15033-17	8-7	18
28-14383-13	8-3	–	28-15033-5	8-7	18
28-14384-13	8-3	–	28-16042-11	9-6	9
28-14385-13	8-3	1	28-16042-11	9-7	9
28-14385-15	8-3	1	28-16043-11	9-12	10
28-14386-3	8-3	18	28-16043-13	9-12	35
28-14386-5	8-3	18	28-16043-15	9-12	38
28-14387-13	8-3	–	28-16043-19	9-12	10
28-14389-11	8-3	–	28-16106-2	9-12	5
28-14389-13	8-3	–	28-16108-11	9-12	7
28-14390-11	8-5	8	28-16108-2	9-12	7

PART NUMBER INDEX

Part Number	Figure	Item
28-16109-1	9-12	19
28-16109-11	9-12	19
▌28-16109-13	9-12	–
28-16112-13	9-12	13
28-16112-15	9-12	13
28-16112-17	9-12	13
28-16113-1	9-12	15
28-16116-1	9-11	18
28-16116-11	9-11	18
28-16119-5	9-11	7
28-16124-1	9-10	11
28-16125-3	9-12	9
28-16125-4	9-12	9
28-16125-5	9-12	9
28-16126-1	9-12	14
28-16129-2	9-10	10
28-16143-1	9-12	32
28-16143-3	9-12	32
28-16156-1	9-2	–
28-162004-11	9-8	28
28-16201-1	9-3	19
28-16203-1	9-2	37
28-16203-1	9-8	26
28-16206-11	9-13	12
28-16215-1	9-7.1	34
28-16215-1	9-7.2	27
28-16219-1	9-10	4
28-16222-1	9-8	28
28-16223-19	9-11	17
28-16224-5	9-11	19
28-16225-19	9-11	20
28-16226-5	9-11	16
28-16227-3	9-11	12
28-16229-13	9-8	29
28-16230-1	9-8	27
28-16231-1	9-8	31
28-16232-1	9-8	32
28-16234-6	9-8	7
28-16236-1	9-8	16
28-16237-1	9-8	14
28-16238-1	9-8	18
28-16238-3	9-8	–
28-16239-4	9-8	9
28-16253-6	9-12	31
28-16253-8	9-12	31
28-16258-1	9-8	20
28-16260-1	9-12	1
28-16263-5	9-11	13
28-16264-1	9-12	2
28-16308-1	9-15	19
28-16310-2	9-15	18
28-16311-1	9-15	39
28-16313-1	9-15	1
28-16314-1	9-15	3
28-16319-1	9-15	2
28-16331-1	9-15	6
28-16332-1	9-14	–
28-16332-1	9-14	–
28-16332-1	9-14	–
28-16332-1	9-14	–
▌28-16332-3	9-14	–
▌28-16332-3	9-14	–
28-16336-11	9-13	22
28-16341-1	9-14	53
28-16345-1	9-15	–
28-16345-11	9-15	–
28-16348-1	4-2	23
28-16352-1	9-14	44
28-16353-3	9-15	30
28-16353-5	9-15	35
28-16374-1	9-15	16
28-16386-1	9-12	6
28-16391-1	9-15	23B
28-16391-3	9-15	23A

PART NUMBER INDEX

Part Number	Figure	Item
28-16391-5	9-15	23A
28-16392-13	9-15	12
28-16394-11	9-15	7
28-16395-1	9-15	17
28-16396-2	9-15	–
28-16397-11	9-15	13
28-16398-901	9-15	23C
28-16399-11	7-11	18
28-164043-11	6-6	22
28-16476-2	6-1	30
28-16524-1	9-9	15
28-16524-3	7-8	32
28-16524-3	7-8.1	29
28-16524-3	9-1	31
28-16524-3	9-11	14
28-16524-3	9-12	24
28-16524-3	9-9	15
28-16524-4	9-1	31
28-16524-4	9-11	14
28-16524-4	9-12	24
28-16524-4	9-9	15
28-16524-5	7-8	32
28-16524-5	7-8.1	29
28-16524-5	9-1	31
28-16524-5	9-11	14
28-16524-5	9-12	24
28-16524-5	9-9	15
28-16524-6	9-1	31
28-16524-6	9-11	14
28-16524-6	9-12	24
28-16524-6	9-9	15
28-16524-7	9-1	31
28-16524-7	9-11	14
28-16524-7	9-12	24
28-16524-7	9-9	15
28-16524-8	9-1	31
28-16524-8	9-11	14
28-16524-8	9-12	24
28-16524-8	9-9	15
28-16601-1	9-3	23
28-16603-1	9-3	24
28-16604-1	9-3	21
28-16608-13	9-3	15
28-16609-1	9-3	4
28-16610-1	9-3	5
28-16611-15	9-3	25
28-16613-3	9-3	28
28-16614-5	9-3	32
28-16615-1	9-3	27
28-16617-1	9-3	43
28-16620-1	9-3	2
28-16623-1	9-3	42
28-16624-11	9-3	34
28-16625-1	9-2	36
28-16628-1	9-3	26
28-16630-3	9-3	1
28-16630-4	9-3	1
28-16632-1	9-3	12
28-16633-1	9-3	7
28-16636-5	9-3	–
28-17101-1	4-1	32
28-17101-7	4-1	32
28-17123-1	4-4	22
28-17123-11	4-4	22
28-17144-1	4-4	2
28-17144-5	4-4	2
28-17145-1	4-4	8
▌ 28-17146-7	4-4	1
▌ 28-17146-907	4-4	1
28-17147-3	4-4	14
28-17149-1	4-4	6
28-17150-1	3-1	340
28-17150-1	4-1	34
28-17151-1	4-4	7

PART NUMBER INDEX

Part Number	Figure	Item
28-17155-1	4-4	11
28-17156-1	4-4	10
28-17156-3	4-4	10
28-17157-1	4-4	9
28-17164-11	3-20	80
28-17164-11	4-2	27
28-17164-13	3-20	20
28-17200-15	3-9	8
28-17203-1	3-10	17
28-17203-11	3-10	17
28-17205-1	3-9	6
28-17206-11	3-10	15
28-17206-13	3-10	14
28-17206-13	3-9	7
28-17206-17	3-10	12
28-17206-19	3-10	16
28-17208-11	3-10	4
28-17308-1	8-7	22
▌28-18009-13	3-20	–120B
▌28-18009-17	3-20	–120D
28-18009-2	3-20	120
▌28-18009-21	3-20	–120E
▌28-18009-23	3-20	–120A
▌28-18009-3	3-20	–120C
28-19048-11	10-23	12
28-19061-11	3-20	130
28-20107-11	3-20	40
28-21009-13	10-28	6
28-22184-11	10-38	110
28-22184-11	10-39	100
28-41	10-11	2
286377	10-10	1
286377	11-6	–
286377	11-6	–
286377	11-6	–
28NBC2040YZP	8-1	23
28NBC2040YZP	8-1	36
28NBC2040YZP	8-2	27
2D7310	7-8	17
2D7310	7-8.1	14
2D8934	7-8	17
2D8934	7-8.1	14
3/8 Harper	3-7	5
3/8 Harper	8-3	56
3/8 Harper	9-12	23
3/8 Harper	9-8	30
3/8-6R	3-21	–
300-097	6-4	–
3001-127-470Sep 27/180C-6.3M	10-22	1
3001-127-470Sep 27/180C-6.3M	App A	–
3001-127-47018	10-22	1
3001-127-47018	App A	–
300-166	6-5	13
▌3025A17	7-8	30
▌3025A17	7-8.1	27
▌3025A35	7-8	30
▌3025A35	7-8.1	27
▌30345T177	9-2	45
▌30345T177	9-2	55
▌30345T178	9-2	45
▌30345T178	9-2	55
313	10-1	–
313	10-1	–
313	10-1	–
313	10-2	–
313	10-2	–
313	10-2	–
313	10-3	–
313	10-3	–
313	10-3	–
313	10-4	–
313	10-4	–
313	10-4	–

PART NUMBER INDEX

Part Number	Figure	Item
313	11-6	–
32005-023	6-1	16
32005-023	6-1	17
321620	7-1.1	160
323101A575ZB	6-1	52
327	10-1	–
327	10-1	–
327	10-1	–
327	10-2	–
327	10-2	–
327	10-2	–
327	10-3	–
327	10-3	–
327	10-3	–
327	10-4	–
327	10-4	–
327	10-5	–
327	10-6	–
32NBC2044YZP	8-3	11
331008-13	3-17	10
331008-2	3-17	7
331281-29W	3-17	15
331281-34W	3-18	8
331281-34W	3-18	17
▌331281-34W	3-23	150
331381-48W	3-17	30
34-0428020-65	10-31	2
34-0428020-65	App A	–
34-0428070-64	10-31	4
34-0428070-64	App A	–
34256	7-8	25
34256	7-8.1	22
3519-6	6-9	–
35574	7-8	14
35574	7-8.1	11
36-0050626-01	10-32	6
3621	10-13	28
3621	10-14	–
3621	10-15	1
3659-03	10-22	11
369583	7-1.1	160
369H8011	6-3	28
38-0130090-00	10-31	9
38-0130090-00	App A	–
38-0130107-00	10-31	7
38-0130107-00	App A	–
38-0130878-01	10-32	5
38-0230021-00	10-31	5
38-0230021-00	App A	–
38-0230021-01	10-32	3
38-0250901-00	10-32	1
381N500	10-9	11
381N500	App A	–
381N-500	App A	–
381N-500-S	10-1	29
381N-500-S	10-2	29
381N-500-S	10-7	10
381N-500-S	10-8	10
381N-500-S	10-9	11
381N-500-S	App A	–
3-902 E515-80	8-5	25
3-902 V747-75	7-1.1	20
3-902 V747-75	7-1.1	140
3-902 V747-75	7-1.1	190
3-903 V747-75	7-1.1	210
3-903 V747-75	7-1.1	230
3-910 E515-80	8-5	24
3SNE094A-72	6-6	1
3SNE094A-72	App A	–
3SNE-094A-72	App A	–
3-SNE-094A-72	App A	–
4 C5OX-S	6-1	25
4016-1	3-3	19
408764B	6-1	–

PART NUMBER INDEX

Part Number	Figure	Item
409140	6-1	52
40NBC2052YZP	8-3	9
4101501-3	3-1	–
▌4101501-3	3-22	–
4110040-201	3-1	300
4112000-103	3-7	1
4112000-7	3-7	1
4112000-9	3-7	1
4112000-903	3-1	310
4112003-11	3-8	33
4112003-12	3-8	34
4112003-13	3-8	36
4112003-14	3-8	37
4112004-1	3-8	1
4112011-5	3-9	12
4112025-11	3-1	130
4112025-11	3-7	6
4112025-13	3-1	140
4112025-13	3-7	7
4112025-15	3-1	150
4112025-15	3-7	8
4112025-17	3-1	160
4112025-17	3-7	9
4112025-19	3-1	170
4112025-19	3-7	10
4112034-11	3-12	–
4112034-13	3-12	6
4112034-15	3-12	10
4112034-15	3-9	8
4112034-23	3-12	2
4112034-25	3-12	6
4112034-3	3-12	1
4112034-37	3-12	–
4112035-5	3-12	11
4114002-13	3-3	12
4114002-14	3-3	13
4114002-21	3-3	6
4114002-21	3-6	30
4114002-22	3-3	7
4114002-22	3-6	40
4114002-23	3-3	4
4114002-24	3-3	5
4114002-29	3-3	1
4114002-30	3-3	2
4114002-31	3-3	14
4114002-32	3-3	15
4114002-919	3-3	8
4114002-920	3-3	9
▌4114008-11	3-23	470
4114009-3	3-6.1	390
4114009-4	3-6.1	400
4114010-11	3-2	15
4114014-11	3-14	–
4114014-13	3-14	–
4114014-14	3-14	–
4114014-15	3-14	–
4114018-1	3-1	290
▌4114019	3-23	220
4114020-1	3-1	270
4114023-901	3-1	10
4114026-3	3-2	13
4114026-4	3-2	14
4114029-1	3-2	13
4114029-2	3-2	14
4114030-3	3-1	30
4114037-1	10-17	23
4114039-11	10-17	20
4114039-15	10-17	20
4115000-1	10-35	5
4115001-21	11-6	60
4115004-1	3-21	90
4115004-3	3-21	100
4115005-1	3-21	70
4115005-3	3-21	80

PART NUMBER INDEX

Part Number	Figure	Item	Part Number	Figure	Item
4115005-5	3-21	–	4118284-1	3-6.1	150
4115005-7	3-21	–	4118284-1	3-6.1	330
4115005-9	3-21	–	4118284-13	3-6.1	180
4115013-1	3-21	140	4118284-13	3-6.1	370
4115014-17	3-21	–	4118290-15	3-6.1	260
4115014-18	3-21	–	4118290-16	3-6.1	290
4115014-19	3-21	–	4118290-17	3-6.1	300
4115014-21	3-21	–	4118290-18	3-6.1	310
4115014-22	3-21	–	4118290-21	3-6.1	320
4115020-1	3-21	210	4118290-33	3-6.1	280
4118255-39	3-3	3	4118291-10	3-6	930
4118260-5	3-6	310	4118291-101	3-6	360
4118260-6	3-6	320	4118291-102	3-6	370
4118268-11	3-4	10	4118291-13	3-6	630
4118268-12	3-4	20	4118291-13	3-6	810
4118268-13	3-4	10	4118291-25	3-6	210
4118268-14	3-4	20	4118291-25	3-6	380
4118269-11	3-4	120	4118291-25	3-6	480
4118269-12	3-4	130	4118291-25	3-6	940
4118270-1	3-4	60	4118291-5	3-6	190
4118270-2	3-4	70	4118291-6	3-6	200
4118271-1	3-4	100	4118291-7	3-6	460
4118271-2	3-4	110	4118291-8	3-6	470
4118272-1	3-4	–	4118291-9	3-6	920
4118272-2	3-4	–	4118292-1	3-6	280
4118272-3	3-4	–	4118292-13	3-6	330
4118272-4	3-4	–	4118292-17	3-6	140
4118278-21	3-6.1	120	4118292-17	3-6	340
4118278-21	3-6.1	360	4118292-29	3-6	660
4118278-23	3-6.1	110	4118292-3	3-6	130
4118278-23	3-6.1	350	4118292-30	3-6	670
4118281-1	3-6.1	20	4118292-33	3-6	540
4118281-19	3-6.1	190	4118292-34	3-6	550
4118281-2	3-6.1	30	4118292-35	3-6	760
4118281-21	3-6.1	380	4118292-36	3-6	770
4118281-3	3-6.1	60	4118292-43	3-6	400
4118281-4	3-6.1	70	4118292-43	3-6	830

PART NUMBER INDEX

Part Number	Figure	Item
4118292-47	3-6	290
4118292-5	3-6	790
4118292-6	3-6	800
4118292-7	3-6	610
4118292-8	3-6	620
4118294-17	3-6	880
4118294-18	3-6	890
4118294-19	3-6	230
4118294-20	3-6	240
4118294-25	3-6	500
4118294-26	3-6	420
4118294-26	3-6	510
4118308-11	3-6	680
4118308-12	3-6	690
4118308-13	3-6	850
4118308-14	3-6	860
4118309-903	3-6	50
4118309-904	3-6	60
4118310-1	3-6.1	–
4118310-2	3-6.1	–
4118310-5	3-6	10
4118310-6	3-6	20
4118310-905	3-1	250
4118310-905	3-6	–
4118310-906	3-1	–
4118310-906	3-6	–
4118312-21	3-6	70
4118312-22	3-6	80
4118313-1	3-6	430
4118788-13	3-14	–
4118788-15	3-14	–
4118788-17	3-14	–
4118798-5	9-14	61
4118798-7	9-14	65
4118805-11	9-1	17
4118805-12	9-1	18
4118805-13	9-1	19
4118824-11	9-1	15
4118824-12	9-1	16
4118824-17	9-1	15
4118824-18	9-1	16
4118850-900	3-1	360
4118892-11	4-1	17
4119315-3	3-2	28
4119315-4	3-2	29
4119316-5	3-2	20
4119316-6	3-2	21
4119316-7	3-2	–
4119316-903	3-2	16
4119319-13	3-2	–
4119319-15	3-2	–
4119319-15	3-2	–
4119319-17	3-2	–
4119319-19	3-2	–
4119319-21	3-2	–
4119319-21	3-2	–
4119319-3	3-2	–
4119319-3	3-2	–
4119319-5	3-2	–
4119319-5	3-2	–
4119319-7	3-2	–
4119319-7	3-2	–
4119327-1	3-2	–
4119327-13	3-2	–
4119327-14	3-2	–
4119327-3	3-2	5
4119328-13	3-2	–
4119328-14	3-2	–
4119328-15	3-2	–
4119328-16	3-2	–
4119329-1	3-2	–
4119329-3	3-2	3
4119329-4	3-2	4
4119329-5	3-2	5

PART NUMBER INDEX

Part Number	Figure	Item
4119333-3	5-1	17
4119333-3	5-3	9
4119333-3	5-4	9
4119333-4	5-1	18
4119333-4	5-3	10
4119333-4	5-4	10
▌4119334-1	3-2	–
▌4119334-2	3-2	–
▌4119334-23	3-2	–
▌4119334-24	3-2	–
4119334-3	3-2	1
4119334-4	3-2	2
4119343-11	3-2	–
4119343-13	3-2	–
▌4119344-3	3-2	–
4119344-901	3-2	6
4119344-903	3-2	8
4119344-905	3-2	8
4119345-15	3-2	–
4119345-15	3-2	–
▌4119345-3	3-2	–
4119345-5	3-2	–
4119345-5	3-2	–
4119345-902	3-2	10
4119348-901	3-2	12
▌4119348-911	3-2	12
4119350-902	3-1	240
4119351-11	6-3	40
4119351-13	3-2	–
4119351-13	3-2	–
4119351-13	3-2	–
4119351-15	6-3	40
4119351-15	6-3	41
4119351-17	6-3	41
4119351-19	3-2	–
4119351-19	3-2	–
4119351-19	3-2	–
4119352-13	3-2	–
4119352-15	3-2	–
4119352-16	3-2	–
4119355-11	3-2	–
4119356-3	3-2	3
4119356-4	3-2	4
4119357-1	3-2	9
4119357-13	3-2	–
4119357-902	3-2	9
4119358-3	3-2	7
4119361-13	3-2	30
4119364-13	3-2	–
▌4119365-11	3-2	–
4119365-13	3-2	–
4119366-1	3-2	7
▌4119368-919	3-2	–
4119500-107	6-1.1	–*
4119518-11	6-1.1	420
4119519-21	5-3	18
4119519-21	5-4	18
4119519-23	6-1.1	450
4119519-25	6-1.1	460
4119519-25	9-5	30
4119519-27	6-1.1	470
4119519-27	9-2	63
4119519-29	6-1.1	480
4119521-1	10-22	12
4119522-15	5-3	19
4119522-15	5-4	19
4119522-16	5-3	19
4119522-16	5-4	19
▌4119523-1	6-1.1	–
▌4119524-1	6-1.1	132
4119525-101	6-1.1	190
4119525-103	6-1.1	200
4119525-105	6-1.1	130
4119525-107	6-1.1	150

PART NUMBER INDEX

Part Number	Figure	Item
4119525-109	6-1.1	350
4119525-110	6-1.1	360
4119525-15	6-1.1	390
4119525-19	6-1.1	–
4119525-21	6-1.1	–
4119525-23	6-1.1	40
4119525-25	6-1.1	280
4119525-27	6-1.1	210
4119525-29	6-1.1	220
4119525-3	6-1.1	300
4119525-33	6-1.1	60
4119525-37	6-1.1	20
4119525-41	6-1.1	80
4119525-43	6-1.1	70
4119525-45	6-1.1	50
4119525-47	6-1.1	260
4119525-49	6-1.1	90
4119525-5	6-1.1	380
4119525-51	6-1.1	250
4119525-53	6-1.1	–
4119525-55	6-1.1	–
▌4119525-57	6-1.1	–
▌4119525-59	6-1.1	–
▌4229525-60	6-1.1	–
4119525-61	6-1.1	140
4119525-63	6-1.1	–
4119525-64	6-1.1	–
4119525-65	6-1.1	160
4119525-66	6-1.1	170
▌4119525-67	6-1.1	–
4119526-1	6-1.1	10
4119742-1	3-18	51
▌4119742-11	3-23	270
▌4119742-13	3-23	–310
4119742-3	3-18	52
▌4119742-5	3-23	260
▌4119742-7	3-23	300
4119743-11	3-17	–
▌4119743-11	3-22	300
4119744-1	3-17	31
4119745-11	3-17	36
4119746-17	3-17	17
4119750-5	3-14	–
4119750-7	3-14	–
4119756-17	3-18	36
▌4119756-17	3-23	360
4119756-21	3-18	30
▌4119756-21	3-23	320
4119758-21	3-17	23
4119758-23	3-17	23
4119759-3	3-1	90
4119760-3	3-15	2
4119760-3	3-16	–
4119760-5	3-15	1
4119760-5	3-16	–
▌4119760-8	3-22	–
▌7119760-9	3-22	–
4119760-903	3-1	20
4119760-905	3-1	70
4119761-5	3-17	1
▌4119761-5	3-22	190
4119761-7	3-17	1
▌4119761-7	3-22	–180
▌4119762-11	3-22	110
▌4119762-13	3-22	120
4119762-5	3-16	1
▌4119762-5	3-22	70
▌4119763-23	3-22	80
▌4119763-25	3-22	100
▌4119763-26	3-22	90
▌4119763-29	3-22	160
▌4119763-30	3-22	150
4119764-19	3-15	3
4119764-21	3-15	6

PART NUMBER INDEX

Part Number	Figure	Item
4119764-23	3-15	5
4119764-25	3-15	4
4119764-27	3-15	4
4119764-29	3-15	6
4119764-31	3-15	5
4119764-33	3-15	3
4119765-17	3-16	6
▌4119765-17	3-22	230
4119765-19	3-16	5
▌4119765-19	3-22	220
4119768-19	3-17	3
4119768-21	3-17	4
▌4119771-10-GEN	3-22	200
4119775-101	3-18	10
4119775-103	3-1	80
▌4119775-107	3-23	–
▌4119775-109	3-23	50
▌4119775-110	3-23	170
4119775-9	3-18	1
▌4119779-15	3-22	140
4119780-11	3-18	24
4119780-19	3-17	11
4119780-23	3-16	14
▌4119780-23	3-22	360
4119780-25	3-18	27
4119780-25	3-18	38
▌4119780-25	3-23	420
4119780-29	3-18	35
▌4119780-29	3-23	500
4119781-11	3-18	19
4119781-12	3-18	21
4119781-13	3-18	20
4119781-15	3-18	19
▌4119781-15	3-23	340
4119781-16	3-18	21
▌4119781-16	3-23	330
4119781-17	3-18	20
▌4119781-17	3-23	350
4119782-1	3-18	–
▌4119782-1	3-23	210
4119782-3	3-18	–
▌4119782-3	3-23	90
4119782-901	3-18	2
4119782-903	3-18	11
4119783-19	3-18	–
4119783-21	3-18	–
4119783-23	3-18	–
4119783-23	3-18	–
4119783-25	3-16	2
4119783-31	3-18	–
4119783-31	3-18	–
4119784-15	3-17	26
4119785-15	3-17	19
4119785-21	3-17	2
4119786-1	3-18	–
▌4119786-1	3-23	70
4119786-3	3-18	–
▌4119786-3	3-23	–190
4119786-901	3-18	–
4119788-15	3-17	21
4119789-19	3-17	6
4119791-13	3-17	29
4119791-15	3-18	7
4119791-15	3-18	16
▌4119791-15	3-23	140
4119795-1	3-18	–
▌4119795-1	3-23	540
4119795-3	3-18	–
4119795-901	3-18	53
4119795-903	3-18	53
4119796-11	3-18	44
▌4119796-11	3-23	550
4119796-13	3-18	44
4119797-1	3-18	43

PART NUMBER INDEX

Part Number	Figure	Item
▌4119797-1	3-23	580
▌4119797-13	3-22	130
▌4119798-1	3-21	–
▌4119798-1-GEN	3-23	530
▌4119798-3	3-21	–
▌4119798-7	3-23	–
▌4119799-19	3-23	480
4119799-25	3-18	39
▌4119799-25	3-23	460
4119799-27	3-18	41
▌4119799-27	3-23	380
4119801-1	3-21	–
▌4119801-1	3-23	–
▌4119801-3	3-21	–
▌4119801-5	3-21	–
4119804-21	3-21	21
4119804-21	9-14	–
4119804-22	3-21	22
4119804-22	9-14	–
4119804-23	3-21	23
4119804-23	9-14	–
4119804-24	3-21	24
4119804-24	9-14	–
4119812-1	3-21	270
4119812-2	3-21	280
4119835-23	5-12	150
4119835-27	3-20	70
4119835-27	5-11	170
4119835-31	3-20	60
4119835-31	5-12	150
4119835-31C480	3-20	110
4119835-31C480B	3-20	110
4119835-31GRD	3-20	30
4119835-33	11-6	–
4119835-33	11-6	–
4119835-35	11-6	–
4119839-13	3-6.1	50
4119840-11	10-11	5
▌4119841-5	3-19	–
4119841-5	3-21	110
4119842-5	3-19	1
4119844-15	3-19	9
4119844-17	3-19	9
4119845-11	3-19	4
4119849-1	3-21	120
4119849-3	3-21	130
▌4119849-7	3-22	60
▌4119849-8	3-22	20
▌4119849-9	3-22	–10
4119849-901	3-16	–
4119849-902	3-16	8
4119849-902	3-17	–
4119849-903	3-16	8
4119849-903	3-17	–
▌4119855-1	3-19	–
4119855-11	3-19	17
4119855-11	9-14	–
4119858-13	3-19	11
4119861-1	3-21	20
4119862-11	3-18	–
4119862-13	3-18	–
4119863-11	3-16	–
4119865-5	10-35	1
4119865-7	10-35	1
4119870-3	3-21	40
▌4119870-7	3-21	–
▌4119871-11-GEN	3-22	30
▌4119871-12-GEN	3-22	40
4119871-3	3-21	50
▌4119871-7	3-21	50
4119872-3	3-21	60
4119873-1	3-21	200
4119873-11	10-11	1
4119873-13	10-11	4

PART NUMBER INDEX

Part Number	Figure	Item
▌4119874-12-GEN	3-22	50
▌4119878-10-GEN	3-22	170
4119878-11	3-16	–
4119878-12	3-16	–
4119879-11	3-18	–
4119879-11	3-18	–
4119879-13	3-18	–
4119879-13	3-18	–
4119880-11	3-18	–
▌4119881-5-GEN	3-23	230
4119884-1	3-21	30
4119884-11	3-18	56
▌4119884-11-GEN	3-23	20
4119884-12	3-18	57
4119884-13	3-18	54
▌4119884-13-GEN	3-23	30
4119884-15	3-18	55
▌4119884-15-GEN	3-23	40
▌4119884-17-GEN	3-23	80
4119884-19	3-18	–
▌4119884-19-GEN	3-23	–200
4119884-21	3-18	–
4119884-21	3-18	–
▌4119884-23	3-23	60
▌4119884-24	3-23	180
▌4119884-5	3-23	10
4119887-11	10-35	2
4119887-13	10-35	2
4119887-911	10-35	2
4119889-1	3-21	240
4119889-2	3-21	250
4119890-5	11-5	330
4119890-6	10-35	7
4119890-6	11-4	18
4119890-6	11-5	350
4119890-7	10-35	6
4119890-7	11-4	13
4119891-7	3-21	10
4119892-11	3-20	140
4119893-3	10-35	3
4119894-15	11-1	40
4119894-17	11-4	9
4119894-17	11-5	60
4119894-19	11-1	41
4119894-21	6-5	9
4119894-23	6-5	8
4119895-1	11-4	18
4119895-3	11-4	13
4119913-11	3-20	50
4119914-11	3-20	90
4119917-11	5-11	170
4120011-11	6-1	53
4120012-13	6-1	96
4120012-15	6-1	97
4120012-17	6-1	98
4120012-19	6-1	99
4120012-21	6-1	89
4120012-22	6-1	90
4120013-21	6-1	100
4120016-3	6-1	48
4120016-4	6-1	49
4120016-5	6-1	48
4120016-6	6-1	49
4120016-7	6-1	48
4120016-8	6-1	49
4120017-3	6-14	1
4120018-1	6-14	2
4120021-1	6-1	21
4120022-13	6-1	83
4120025-15	6-4	10
4120026-13	6-4	21
4120026-15	6-4	21
4120027-1	11-2	4
4120027-1	11-2	20

PART NUMBER INDEX

Part Number	Figure	Item
4120027-1	6-4	8
4120028-1	6-1	71
4120029-11	6-1	69
4120029-13	6-1	70
4120030-1	10-20	1
4120030-3	10-20	9
4120030-5	10-20	11
4120031-1	6-1	45
4120032-11	6-1	46
4120032-13	6-1	45
4120033-1	6-1	66
4120033-3	6-1	67
4120034-1	6-1	65
4120035-11	6-1	72
4120036-1	6-4	–
4120038-23	5-5	–
4120038-23	5-5	–
4120038-25	5-5	–
4120040-3	6-13	4
4120040-4	6-13	5
4120040-5	6-13	2
4120040-6	6-13	3
4120045-5	6-13	1
4120045-9	6-13	1
4120046-11	6-1	42
4120046-13	6-1	42
4120046-15	6-1	42
4120046-17	6-1	42
4120500-901	6-3	–
4120506-11	6-3	1
4120507-1	6-3	4
4120509-1	6-3	–
4120509-11	6-3	17
4120509-17	6-3	17
4120509-3	6-3	–
4120510-3	6-3	22
4120510-5	6-3	22
4120510-905	6-3	22
4120511-1	6-4	2
4120513-3	6-4	–
4130514-11	6-3	5
4120515-1	6-3	11
4120515-3	6-3	13
4120515-5	6-4	37
4120515-7	6-4	35
4120516-11	6-3	18
4120516-13	6-3	19
4120517-11	6-1	13
4120517-13	6-1	14
4120517-15	6-4	23
4120517-17	6-4	25
4120521-11	6-3	34
4120525-11	6-3	35
4120525-13	6-3	35
4120525-15	6-3	36
4120532-9	6-3	–
4122005-19	5-2	80
4122005-20	5-2	50
▌4122005-25	5-2	472
▌4122005-26	5-2	474
4122005-39	5-2	20
4122005-41	5-2	70
4122005-43	5-2	60
4122005-49	5-2	270
4122009-1	5-3	1
4122009-1	5-4	1
4122009-2	5-3	2
4122009-4	5-4	2
4122014-15	5-6	2
4122015-11	6-4	13
4122015-15	6-1	78
4122015-17	5-8	14
4122015-19	5-8	17
4122015-19	5-8	45

PART NUMBER INDEX

Part Number	Figure	Item	Part Number	Figure	Item
4122015-19	5-8	86	4122030-105	5-5	45
4122015-21	11-2	12	4122030-5	5-5	1
4122015-21	11-2	28	4122030-5	5-6	1
4122015-23	11-2	12	4122030-7	5-5	3
4122015-23	11-2	28	4122030-9	5-5	44
4122015-23	6-4	13	4122034-11	5-3	7
4122015-25	5-8	17	4122034-11	5-4	7
4122015-25	5-8	45	4122034-11	5-7	11
4122015-25	5-8	86	4122035-1	5-5	33
4122016-23	5-4	25	4122035-11	5-6	39
4122016-5	5-3	22	4122035-13	5-6	29
4122017-11	5-8	21	4122035-13	5-6	31
4122019-13	5-3	11	4122035-1	5-5	25
4122021-1	5-3	3	4122035-3	5-5	23
4122021-1	5-4	3	4122035-5	5-5	12
4122022-11	5-3	4	4122036-3	5-12	130
4122022-11	5-4	4	4122036-5	5-9	12
4122024-17	5-8	34	4122036-7	5-12	130
4122024-17	5-8	75	4122036-7	5-9	12
4122024-5	5-8	8	4122037-11	5-5	28
4122025-3	5-5	19	4122037-11	5-6	34
4122025-3	5-6	25	4122037-12	5-5	27
4122026-3	5-12	220	4122037-12	5-6	33
4122026-5	5-12	350	4122037-13	5-5	28
4122026-7	5-8	26	4122037-13	5-6	34
4122026-7	5-8	67	4122037-14	5-5	27
4122026-7	5-8	94	4122037-14	5-6	33
4122026-9	5-5	29A	4122038-11	5-2	320
4122028-3	5-5	38	4122038-13	5-2	330
4122029-1	5-5	32	4122038-15	5-2	340
4122029-1	5-6	38	4122038-17	5-2	350
4122029-15	5-5	34	4122040-11	6-1	62
4122029-15	5-6	40	4122041-3	5-3	8
4122029-3	5-5	24	4122041-3	5-4	8
4122029-3	5-6	30	4122042-1	6-1	59
4122029-7	5-5	34A	4122042-101	6-1	58
4122030-101	5-5	46	4122042-3	6-1	58

PART NUMBER INDEX

Part Number	Figure	Item	Part Number	Figure	Item
4122042-5	6-1	37	4122052-6	5-1	–
4122042-9	6-1	59	4122052-7	5-1	–
4122043-11	6-1	34	4122052-8	5-1	–
4122043-11	7-1.1	121	4122052-101	5-1	–
4122044-1	5-2	200	4122052-102	5-1	–
4122044-2	5-2	160	4122053-13	5-1	4
4122045-1	7-7	10	4122053-17	5-7	1
4122047-17	5-2	580	4122053-19	5-7	1
4122047-17	5-2	650	4122054-3	5-1	–
4122047-18	5-2	590	4122054-903	5-1	1
4122047-19	5-2	560	4122054-904	5-1	2
4122047-19	5-2	680	4122054-906	5-1	–
4122047-20	5-2	570	4122055-3	5-7	5
4122048-1	5-4	20	4122056-11	5-7	3
4122048-3	5-1	12	4122057-1	5-1	7
4122049-13	5-8	4	4122057-2	5-1	8
4122049-13	5-8	30	4122057-3	5-1	7
4122049-19	5-8	4	4122057-3	5-7	–
4122049-19	5-8	30	4122057-4	5-1	8
4122049-19	5-8	71	4122057-4	5-7	–
4122049-3	5-8	1	4122058-901	5-1	–
4122049-3	5-8	27	4122058-902	5-1	–
4122049-5	5-8	1	4122059-3	5-5	9
4122049-5	5-8	27	4122060-1	5-7	4
4122049-5	5-8	68	4122061-5	3-1	280
4122050-7	5-11	–	4122061-5	5-2	–
4122051-101	5-11	250	4122062-11	5-2	380
4122051-101	5-8	–	4122062-13	5-2	390
4122051-5	5-8	–	4122064-3	5-9	1
4122051-7	5-8	–	4122065-15	5-1	25
4122051-9	5-8	–	4122065-17	5-4	31
4122052-1	5-1	–	4122065-19	5-4	29
4122052-10	5-1	–	4122065-21	5-1	16
4122052-2	5-1	–	4122065-23	5-1	24
4122052-3	5-1	–	4122065-23	5-4	11
4122052-4	5-1	–	4122065-23	5-4	30
4122052-5	5-1	–	4122065-25	5-1	21

PART NUMBER INDEX

Part Number	Figure	Item	Part Number	Figure	Item
4122065-27	5-1	10	4122085-13	5-2	610
4122065-33	5-1	27	4122085-13	5-2	740
4122065-35	5-1	34	4122085-14	5-2	620
4122068-11	5-4	24	4122085-15	5-2	630
4122069-11	5-4	33	4122085-16	5-2	640
4122070-1	5-7	7	4122085-21	5-2	660
4122071-1	5-1	26	4122085-22	5-2	670
4122071-13	5-1	–	4122085-24	5-2	620
4122071-13	5-3	–	4122086-11	5-2	10
4122071-13	5-4	–	4122086-12	5-2	40
4122074-11	5-1	22A	4122087-11	5-8	42
4122074-903	5-3	12	4122087-11	5-8	83
4122074-903	5-4	12	4122088-1	5-1	14
4122074-905	5-1	22	4122088-3	5-1	14
4122078-1	5-8	36	4122088-5	5-1	14
4122078-3	5-8	77	4129054-1	6-9	21
4122078-5	5-8	77	4129054-105	6-1	5
4122080-11	5-8	43	4129054-11	6-9	21
4122080-11	5-8	84	4129054-13	5-3	6
4122080-13	5-8	49	4129054-13	5-4	6
4122080-17	5-8	32	4129054-13	5-7	12
4122080-17	5-8	73	4129054-13	6-1	43
4122080-19	5-8	79	4129054-13	6-9	15
4122081-1	5-8	39	4129054-17	6-9	17
4122081-1	5-8	80	4129054-19	6-9	19
4122081-15	5-8	80	4129054-25	5-3	6
4122081-3	5-8	46	4129054-25	5-4	6
4122081-5	5-8	80	4129054-25	6-9	15
4122082-11	5-8	37	4129054-27	5-12	330
4122082-11	5-8	78	4129054-29	6-9	15
4122083-1	5-8	62	4129054-3	5-7	12
4122083-17	5-8	60	4129054-3	6-1	43
4122083-19	5-8	63	4129054-3	6-9	15
4122083-21	5-8	–	4129054-31	6-9	17
4122083-3	5-8	64	4129054-33	6-9	19
4122084-1	5-1	30	4129054-35	6-9	21
4122084-13	5-1	33	4129054-37	6-1	3

PART NUMBER INDEX

Part Number	Figure	Item
4129054-39	5-3	6
4129054-39	5-4	6
4129054-39	6-1	5
4129054-41	5-7	12
4129054-41	6-1	43
4129054-43	5-12	330
4129054-45	6-1	1
4129054-5	6-1	3
4129054-7	6-1	1
4129054-7	6-9	17
4129054-9	6-9	19
4129100-11	6-9	9
4129100-9	6-9	–
4129100-902	6-9	–
4129101-101	6-10	–
4129101-103	6-10	–
4129101-105	6-10	–
4129101-5	6-10	1
4129101-7	6-10	1
4129101-9	6-10	–
4129101-905	6-10	–
4129101-907	6-10	–
4129102-105	6-10	21
4129102-107	6-10	21
4129102-13	6-10	21
4129102-15	6-10	21
4129103-11	6-10	8
4129104-21	6-10	18
4129107-13	6-11	1
4129107-13	6-12	1
4129108-11	6-11	2
4129108-13	6-12	3
4129108-15	6-11	3
4129111-1	6-11	11
4129111-3	6-12	13
▌ 4129112-1	6-9	26
4129112-11	6-9	26
4129113-1	6-11	23
4129113-1	6-12	25
4129113-3	6-12	25
▌ 4129113-7	6-12	25
4129116-1	6-12	4
4129117-11	6-10	15
4129117-13	6-10	15
4129117-15	6-10	15
4129117-17	6-10	15
4129117-19	6-10	15
4129117-21	6-10	15
4129118-15	6-12	16
4129119-11	6-10	11
4129120-1	6-11	20
4129120-1	6-12	22
4129120-13	6-11	17
4129120-13	6-12	19
4129121-1	6-11	16
4129121-1	6-12	18
4129124-11	6-9	40
4129125-11	6-11	15
4129125-11	6-12	17
4129125-15	6-11	9
4129125-15	6-12	11
4129125-17	6-11	10
4129125-17	6-12	12
4129126-13	6-10	2
4129126-15	6-10	2
4129129-1	6-10	1
4129129-3	6-10	1
4129129-5	6-10	1
4129136-11	6-9	53
4129136-13	6-9	54
4129136-15	6-9	55
4129500-29	11-4	10
4129501-901	11-1	34
4129501-901	11-2	–

PART NUMBER INDEX

Part Number	Figure	Item
4129501-902	11-1	36
4129501-902	11-2	–
4129518-1	6-1	15
4129522-13	11-5	180
4129522-17	11-5	160
4129523-21	11-5	130
▌4129523-21	6-1.1	–
4129524-11	11-4	4
4129524-11	11-5	240
4129530-1	11-4	1
4129530-1	11-5	120
▌4129530-3	11-5	–120A
4129533-11	11-5	50
4129533-11	6-5	7
4129533-13	11-5	70
4129533-13	6-5	11
▌4129533-15	11-5	–
4129533-15	6-5	10
▌4129534-11	11-5	–
4129534-11	6-5	1
4129535-11	6-5	4
4129535-13	6-5	3
4129538-15	6-5	2
4129538-17	6-5	2
4129540-11	11-2	9
4129540-11	11-2	25
4129540-13	11-2	9
4129540-13	11-2	25
4129540-15	11-2	9
4129540-15	11-2	25
4129541-1	11-2	1
4129542-1	11-2	17
4129543-1	11-3	8
4129543-3	11-3	8
4129548-11	11-4	15
4129548-13	11-4	16
4129548-15	11-5	10
4129548-17	11-5	20
4129548-3	11-5	–
▌4129548-5	11-5	–
4129549-11	6-5	15
4129550-11	11-1	21
4129551-11	11-1	20
4129552-1	11-1	13
4129553-1	11-1	6
4129554-1	11-1	2
4129555-1	11-1	9
4129556-1	11-1	8
4129557-11	11-3	6
4129557-13	11-3	5
4129558-11	11-1	26
4129559-1	11-1	14
4129559-1	11-3	–
4129560-1	11-1	33
4129560-3	11-1	35
4129560-5	11-4	8
4129560-5	11-5	30
4129560-7	6-4	29
4129560-7	6-5	17
4129560-9	6-1	77
4129560-9	6-5	18
4129561-11	11-1	44
4129562-3	11-1	43
4129563-11	11-1	45
4130008-1	7-8.2	20
4130008-10	7-8.2	50
4130008-2	7-8.2	30
4130008-20	7-8.2	55
4130008-3	7-8.2	40
4130015-1	7-8	11
4130015-1	7-8.1	8
4130015-3	7-8	11
4130015-3	7-8.1	8
4130020-1	7-8	–

PART NUMBER INDEX

Part Number	Figure	Item	Part Number	Figure	Item
4130020-101	7-8	–	4130040-9	7-9	–
4130020-103	7-8	–	4130046-11	7-6.1	9
4130020-3	7-6	–	4130052-11	7-8	26
4130020-5	7-6	–	4130052-13	7-8	26
4130020-7	7-8	–	4130052-13	7-8.1	23
4130020-9	7-6	–	4130060-101	7-8.1	–
4130021-15	7-8	19	4130060-103	7-8	–
4130021-21	7-8	18	4130060-105	7-8.1	–
4130021-23	7-8	19	4130060-107	7-8	–
4130021-23	7-8.1	16	4130060-109	7-8.1	–
4130021-25	7-8	18	4130060-111	7-6	–
4130021-25	7-8.1	15	4130060-113	7-6	–
4130030-1	7-8	–	4130060-3	7-8	–
4130030-3	7-6	–	4130060-5	7-6.1	–
4130031-1	7-9	20	4130060-7	7-6.1	–
4130032-1	7-9	19	4130060-9	7-8.1	–
4130032-3	7-9	17	4130402-11	7-7	5
4130032-5	7-9	17	4130402-13	7-7	5
4130032-7	7-9	29	4130500-101	7-4	–
4130032-9	7-9	17	4130500-105	7-5	1
4130033-1	7-9	8	4130500-106	7-5	1A
4130033-17	7-9	–	4130500-111	7-5	–
4130034-11	7-9	2	4130500-5	7-4	–
4130034-13	7-9	3	4130500-7	7-4	1
4130034-15	7-9	2	4130500-901	7-4	–
4130034-17	7-9	2	4130500-909	7-5	–
4130034-19	7-9	2	4130500-911	7-5	–
4130034-21	7-9	3	4130500-990	7-5	–
4130035-1	7-9	12	4130500-991	7-5	–
4130035-11	7-9	14	4130501-11	7-6	7
4130035-13	7-9	–	4130501-11	7-6.1	6
4130036-5	7-9	10	4130503-1	7-3	–
4130038-11	7-9	8	4130503-11	7-3	12
4130039-1	7-9	10	4130504-13	7-4	21
4130040-1	7-9	–	4130504-13	7-5	24
4130040-5	7-9	–	4130505-4	7-11	23
4130040-7	7-9	–	4130505-4	7-8	34

PART NUMBER INDEX

Part Number	Figure	Item	Part Number	Figure	Item
4130505-8	7-10	2	4130521-15	7-4	27
4130505-8	7-10	4	4130521-15	7-5	30
4130506-15	7-4	16	4130521-17	7-3	32
4130506-15	7-5	19	4130521-17	7-4	27
4130507-13	7-3	5	4130521-17	7-5	30
4130507-19	7-3	6	4130521-19	7-3	32
4130508-13	7-4	10	4130521-19	7-4	27
4130508-13	7-5	13	4130521-19	7-5	30
4130509-1	7-4	2	4130521-21	7-3	32
4130510-15	7-5	15	4130521-21	7-4	27
4130510-17	7-4	12	4130521-21	7-5	30
4130510-17	7-5	15	4130521-23	7-3	32
4130510-19	7-4	12	4130521-23	7-4	27
4130510-19	7-5	15	4130521-23	7-5	30
4130511-3	7-6	19	4130521-25	7-3	32
4130511-3	7-6.1	18	4130521-25	7-4	27
4130512-13	7-4	13	4130521-25	7-5	30
4130512-17	7-5	16	4130521-9	7-3	32
4130513-13	7-4	11	4130521-9	7-4	27
4130513-13	7-5	14	4130521-9	7-5	30
4130514-15	7-6	1	4130524-13	7-4	15
4130514-17	7-6	1	4130524-13	7-5	18
4130516-17	7-4	17	4130525-1	7-3	1
4130516-17	7-5	20	4130525-11	7-3	1
4130517-13	7-4	14	4130529-13	7-3	24
4130517-13	7-5	17	4130529-15	7-3	20
4130518-1	7-3	4	4130529-17	7-3	26
4130520-11	7-3	30	4130529-19	7-3	25
4130520-13	7-4	25	4130529-21	7-3	23
4130520-13	7-5	28	4130529-25	7-3	21
4130521-11	7-3	32	4130530-11	7-6	18
4130521-11	7-4	27	4130530-11	7-6.1	17
4130521-11	7-5	30	4130531-1	7-3	7
4130521-13	7-3	32	4130533-1	7-8.1	31
4130521-13	7-4	27	4130533-15	7-8.1	32
4130521-13	7-5	30	4130537-1	7-5	2A
4130521-15	7-3	32	4130537-2	7-5	2

PART NUMBER INDEX

Part Number	Figure	Item
4130538-11	7-6	1
4130538-11	7-6.1	1
4130541-11	6-10	3
4130541-11	7-4	18
4130541-11	7-5	21
4130541-13	6-10	3
4130541-13	7-4	18
4130541-13	7-5	21
4130541-15	6-10	3
4130541-17	6-10	3
4131001-103	7-2	–
4131001-105	7-1	1
4131001-111	7-2	–
4131001-113	7-2	–
4131001-115	7-2	–
4131001-129	7-1	3
4131001-129	7-1.1	10
4131001-131	7-1	1
4131002-15	7-1	22
4131003-21	7-2	1
4131003-23	7-2	1
4131004-15	7-1	26
4131005-11	7-2	2
4131005-13	7-1	24
4131005-13	7-1	28
4131005-15	7-1	24
4131005-15	7-1	28
4131005-17	7-1	24
4131005-17	7-1	28
4131005-25	7-1	19
4131005-27	7-1	20
4131005-29	7-1	20
4131005-31	7-1	24
4131005-31	7-1	28
4131005-35	7-1	4
4131005-35	7-1.1	14
4131005-37	7-1	4
4131005-37	7-1.1	15
4131005-39	7-2	6
4131005-39	7-2	6
4131005-41	7-2	6
4131005-41	7-2	6
4131006-25	7-1	3
4131006-25	7-1.1	11
4131006-31	7-1	3
4131006-33	7-1	3
▌4131006-35	7-1	3
▌4131006-37	7-1	3
4131006-45	7-1	3
4131007-15	7-2	3
4131007-15	7-2	3
4131007-17	7-2	3
4131007-19	7-2	3
4131008-15	7-1	9
4131009-13	7-1	27
4131010-13	7-2	11
4131020-5	7-1.1	–
4131020-7	7-1.1	–
4131021-15	7-1.1	50
4131021-17	7-1.1	80
4131022-5	7-1.1	70
4131022-7	7-1.1	40
4131023-5	7-1.1	150
4131024-11	7-1.1	30
4131024-11	7-1.1	130
▌4132000-9	9-15	–
4132008-5	9-14	13
4132014-15	9-14	22
4132014-19	9-14	21
4132014-23	9-14	23
4133-0044	6-1	50
4136000-902	7-10	3
4136000-903	7-10	1
4136000-907	7-10	1

PART NUMBER INDEX

Part Number	Figure	Item
4136000-913	7-10	5
4136002-15	7-10	9
4140500-101	9-12	–
4140500-7	9-13	–
4140500-9	9-12	–
4140500-909	9-12	–
4140500-911	9-12	–
4140520-5	9-11	–
4140525-11	9-11	–
4140526-3	9-11	2
4140526-7	9-11	2
4140530-1	9-12	3
4140531-13	9-11	1
4140532-1	9-12	29
4140532-3	9-12	29
4140532-5	9-12	29
4140534-11	9-11	5
4140535-13	9-11	7
4142005-15	7-6	–
4142008-11	7-8	15
4142008-11	7-8.1	12
4142010-1	7-6.1	2
4142010-11	7-6	2
4142010-11	7-6	2
4142010-11	7-6	2
4143010-5	8-3	47
4143011-11	8-2	41
4143011-13	8-2	44
4143012-101	8-2	22
4143012-21	8-2	22
4143012-31	8-2	23
4143012-35	8-2	20
4143012-5	8-2	20
4143012-7	8-2	20
4143012-9	8-2	22
4143013-17	8-2	19
4150003-15	9-14	52
4150004-1	9-14	49
4150004-2	9-14	50
4150004-3	9-14	70
4150004-4	9-14	71
4150006-3	9-14	47
4150006-6	9-14	48
4150008-1	9-14	1
4150008-5	9-14	2
4150011-3	9-14	56
4150011-4	9-14	58
4150013-3	9-14	55
4150013-4	9-14	57
4150017-11	9-14	51
4150018-1	9-14	68
4150018-101	9-14	68
4150018-6	9-14	75
4150018-7	9-14	72
4150018-8	9-14	69
4150018-9	9-14	74
416-13	6-9	–
4164	10-16	4
4164	10-17	13
4164002-1	6-6	14
4164004-11	6-6	–
4164004-11	9-6	34
4164004-11	9-7.1	27
4164004-13	6-6	8
4164006-11	6-7.2	20
4164006-11	9-4	29
4164012-5	6-6	24
4164014-103	6-8	2
4164014-17	6-8	13
4164014-29	6-8	11
4164014-43	9-5	27
4164015-1	6-8	–
4164015-901	6-8	–
4164015-902	6-8	1

PART NUMBER INDEX

Part Number	Figure	Item	Part Number	Figure	Item
4164017-3	9-4	16	4166024-103	9-2	40
4166008-101	9-2	12	4166024-103	9-2	50
4166008-19	9-2	29	4166024-11	9-2	–
4166008-21	9-2	9	4166024-13	9-2	–
4166008-23	9-2	12	4166024-19	9-2	41
4166008-25	9-2	25	4166024-19	9-2	51
4166008-27	9-2	28	4166024-23	9-2	–
4166008-29	9-2	24	4166024-23	9-2	–
4166009-101	9-1	1	4166024-37	9-2	–
4166009-3	9-1	1	4166024-37	9-2	–
4166009-5	9-1	1	4166024-5	9-2	49
4166009-7	9-1	1	4166024-7	9-2	39
4166009-9	9-1	1	4166031-101	9-2	34
4166010-1	9-1	–	4166031-101	9-3	–
4166010-3	9-1	–	4166031-102	9-2	35
4166010-7	9-1	–	4166031-102	9-3	–
4166010-7	9-1	–	4166031-106	9-3	–
4166011-1	9-2	11	4166031-107	9-3	–
4166014-1	9-1	10	4166031-108	9-3	–
4166014-3	9-1	10	4166031-11	9-3	38
4166014-3	9-1	10	4166032-1	9-3	–
4166014-5	9-1	10	4166032-2	9-3	–
4166015-11	9-1	2	4166032-3	9-3	–
4166015-11	9-1	2	4166032-5	9-3	–
4166015-13	9-1	5	4166034-3	9-3	18
4166015-15	9-1	5	4166036-47	9-14	–
4166015-17	9-1	2	4166037-1	9-14	8
4166015-17	9-1	2	4166038-11	9-14	–
4166015-19	9-1	6	4166050-1	9-2	32
4166015-21	9-1	4	4166050-101	9-2	17
4166015-21	9-1	4	4166050-103	9-2	16
4166015-21	9-1	4	4166050-105	9-2	26
4166015-23	9-1	5	4166050-107	9-2	18
4166015-23	9-1	5	4166050-109	9-2	19
4166022-905	9-1	26	4166050-201	9-5	1
4166024-101	9-2	45	4166050-205	9-5	22
4166024-101	9-2	55	4166050-207	9-14	3

PART NUMBER INDEX

Part Number	Figure	Item
4166050-209	9-5	17
4166050-211	9-2	33
4166050-213	9-2	32
4166050-5	9-2	15
4166050-7	9-2	14
4166050-9	9-2	27
4166050-901	9-5	–
4166050-903	9-2	16
4166050-907	9-2	14
4166051-15	9-1	14
4166051-20	9-1	14
4166051-25	9-1	14
4166051-30	9-1	14
4166052-11	9-2	62
4166052-13	9-5	29
4166053-11	9-3	–
4166053-13	9-3	–
4166053-15	9-1	11
4166053-15	9-1	11
4166053-15	9-1	11
4166053-15	9-3	–
4167001	9-5	–
4167211-15	9-4	14
4167213-19	9-4	2
4167213-21	9-4	4
4167225-11	9-4	1
4167226-3	9-7	–
4167227-7	9-4	–
4167229-11	9-4	11
4167230-1	9-4	10
4167231-13	9-4	28
4167232-13	9-4	18
4167233-13	9-4	19
4167241-11	9-6	9
4167241-11	9-7	9
4167241-11	9-7.1	–
4167241-11	9-7.2	–
4167242-11	9-4	8
4167276-1	9-9	13
4167276-27	9-9	12
4167286-11	9-9	14
4167287-11	9-9	5
4167290-1	9-9	18
4167291-13	9-9	4
4167292-11	9-9	3
4167292-13	9-9	2
4167310-3	9-8	–
4167311-11	9-5	11
4167313-1	9-5	14
4167313-3	9-5	14
4167314-1	9-8	5
4167315-3	9-8	33
4167316-3	9-12	18
4167316-5	9-12	18
4167317-13	9-12	22
4167318-11	9-12	25
4167319-1	9-8	8
4167320-11	9-8	13
4167320-13	9-8	3
4167321-101	9-7.2	25
4167321-103	9-7.1	25
4167321-105	9-7.2	25
4167321-5	9-6	4
4167321-7	9-7	4
4167321-9	9-7	4
4167322-17	9-6	5
4167322-17	9-7	5
4167322-19	9-6	3
4167322-19	9-7	3
4167322-21	9-6	1
4167322-21	9-7	1
4167322-23	9-6	2
4167322-23	9-7	2
4167322-5	9-7.1	1

PART NUMBER INDEX

Part Number	Figure	Item
4167322-5	9-7.2	1
4167323-11	9-6	11
4167323-11	9-7	11
4167323-11	9-7.1	4
4167323-11	9-7.2	4
4167323-13	9-6	12
4167323-13	9-7	12
4167323-13	9-7.1	3
4167323-13	9-7.2	3
4167323-15	9-6	7
4167323-15	9-7	7
4167323-15	9-7.1	7
4167323-15	9-7.2	7
4167323-17	9-6	10
4167323-17	9-7	10
4167323-17	9-7.1	5
4167323-17	9-7.2	5
4167323-19	9-6	14
4167323-19	9-7	14
4167323-19	9-7.1	6
4167323-19	9-7.2	6
4167324-15	9-4	26
4167324-17	9-6	25
4167324-21	9-6	22
4167324-25	9-6	21
4167324-27	9-7.1	9
4167324-27	9-7.2	9
4167324-29	9-7.1	17
4167324-29	9-7.2	17
4167325-15	9-6	17
4167325-15	9-7	17
4167325-17	9-6	15
4167325-17	9-7	15
4167325-19	9-6	17
4167325-21	9-7.1	11
4167325-21	9-7.2	11
4167326-7	9-7	–
4167326-9	9-6	–
4167327-11	9-6	26
4167327-13	9-6	24
4167327-15	9-7	22
4167327-17	9-7	20
4167327-19	9-7.1	21
4167327-19	9-7.1	36
4167327-19	9-7.2	21
4167327-19	9-7.2	29
4167328-1	9-6	31
4167328-1	9-7	25
4167328-11	9-7	21
4167328-3	9-7.1	22
4167328-3	9-7.2	22
▌4167333-13	9-12	–
4167338-11	9-7.1	33
4167338-11	9-7.2	26
4167340-1	9-7.2	–
4167340-3	9-7.1	–
4167340-5	9-7.2	–
4167360-17	6-6	22
4167370-1	6-7.1	–
4167370-3	6-7.1	9
4167370-7	6-7.1	–
4167371-1	6-7.2	7
4167371-17	6-7.2	2
4167371-19	6-7.1	4
4167371-19	6-7.2	13
4167371-21	6-7.2	9
4167371-25	6-7.2	12
4167371-3	6-7.2	3
4167371-31	6-7.2	11
4167371-31	6-7.2	17
4167371-33	6-7	12
4167371-37	6-7.2	2
4167372-1	6-7	3
4167372-1	6-7	8

PART NUMBER INDEX

Part Number	Figure	Item
4167373-1	6-7.1	13
4167373-1	6-7.2	22
4167374-11	6-7.1	1
4167511-5	9-1	38
▌4167521-19	3-21	320
4167521-19	9-1	40
▌4167521-21	3-21	300
4167521-21	9-1	37
4168000-11	9-14	42
4168001-1	9-14	–
▌4168001-11	9-14	76
4168001-5	9-14	–
4168001-7	9-14	–
4168001-9	9-14	–
4168002-11	9-14	42
4168002-13	9-14	42A
4172000-101	3-10	–
4172000-101	3-9	1
4172000-5	3-11	1
4172000-7	3-11	2
4172000-9	3-11	–
4172000-9	3-9	1
4172001-1	3-10	1
4172001-3	3-10	2
4172001-5	3-10	1
4174000-7	3-1	50
4174000-9	3-1	40
4174001-101	4-2	2
4174001-102	4-2	2
4174001-103	4-2	4
4174001-104	4-2	4
4174001-105	4-2	3
4174001-107	4-2	3
4174002-7	4-1	1
4174002-9	4-1	19
4174003-1	4-2	1
4174003-3	4-2	1
4174004-1	4-2	–
4174004-3	4-2	–
4174007-5	4-2	6
4174007-7	4-2	7
4174007-8	4-2	7
4174008-11	4-2	–
4174008-11	4-2	–
4174008-15	4-2	–
4174008-17	4-2	–
4174009-13	4-2	5
4174012-11	4-2	15
4174012-13	4-2	16
4174013-903	4-1	6
4174013-903	4-1	25
4174014-11	4-1	2
4174014-11	4-1	20
4174015-11	4-4	26
4174016-101	4-4	17
4174016-7	4-4	17
4174018-1	3-1	60
4174019-1	4-5	5
4174019-101	4-5	9
4174019-102	4-5	4
4174019-104	4-5	10
▌4174019-12	4-5	–
▌4174019-13	4-5	–
▌4174019-14	4-5	–
▌4174019-17	4-5	–
▌4174019-18	4-5	–
▌4174019-19	4-5	–
4174019-2	4-5	6
▌4174019-20	4-5	–
▌4174019-21	4-5	–
▌4174019-22	4-5	–
4174019-3	4-5	7
4174019-4	4-5	8
4174019-7	4-5	1

PART NUMBER INDEX

Part Number	Figure	Item	Part Number	Figure	Item
4174019-8	4-5	2	4192083-15	10-19	5
4174019-9	4-5	3	4192083-19	10-21	1
4174020-11	4-5	–	4192083-9	10-18	20
4174020-11	4-5	–	4192102-4	10-16	20
4174020-13	4-5	–	4192102-903	10-16	20
4174020-13	4-5	–	4192507-103	10-37	70
4174020-13	4-5	–	4192508-939	7-9	10
4174020-13	4-5	–	4192509-3	5-12	190
4174020-15	4-4	31	4192509-901	7-8	30
4174021-11	4-5	16	4192509-901	7-8.1	27
4174021-12	4-5	17	4192514-37	10-24.2	1
4174022-11	4-5	11	4192514-67	10-24.1	15
4174022-12	4-5	12	4192514-69	10-24.1	12
4174024-11	4-5	21	4192514-71	6-7.3	40
4174027-11	4-4	27	4192514-998	10-26	–
4174032-11	4-6	1	4192570-1	10-36	9
4174032-12	4-6	1	4193003-1	10-25	1
4174033-1	4-6	8	4193003-3	10-25	2
4174033-17	4-6	11	4193003-5	10-25	1
4174033-2	4-6	8	4193003-5	10-26	1
4174034-11	4-5	25	4193003-7	10-25	2
4174501-4	4-3	1	4193003-7	10-26	2
4174501-4	4-4	–	4196518-19	11-1	48
4174501-5	4-3	1	4196529-3	3-21	220
4174501-5	4-4	–	4196536-1	10-33	12
4174501-901	4-4	16	4196536-25	10-33	18
4174501-904	4-4	–	4196536-5	10-33	12
4174501-905	4-4	–	4196540-11	10-14	8
4182127-5	3-1	260	4196540-11	10-14	12
4182142-1	6-5	–	4196550-1	10-14	4
4182310-13	10-33	1	4196550-17	10-14	–
4182310-15	10-33	2	4196551-1	10-12	17
4182310-17	10-33	–	4196551-1	10-13	24
4182310-19	10-33	–	4196551-3	10-12	17
4182310-21	10-33	1	4196551-3	10-13	24
4192083-1	10-18	21	4196555-5	10-16	11
4192083-15	10-18	22	4196555-7	10-16	11

PART NUMBER INDEX

Part Number	Figure	Item
4196555-9	10-16	11
4196556-13	10-23	4
4196557-1	3-21	–
4196558-5	10-18	29
4196562-11	10-1	14
4196562-11	10-2	14
4196562-11	10-3	14
4196562-11	10-4	14
4196569-1	10-14	3
4196569-1	10-15	6
4196578-1	10-12	1
▌4196578-15	10-13	1
▌4196578-17	10-13	–
▌4196578-19	10-13	–
▌4196578-21	10-13	–
▌4196578-3	10-13	–
▌4196578-5	10-13	–
4196579-1	10-13	17
4196579-101	10-12	13
4196579-19	10-12	–
4196579-19	10-13	–
4196579-21	10-13	2
4196579-23	10-13	6
4196579-25	10-13	7
4196579-27	10-13	10
4196579-29	10-13	9
4196579-31	10-13	8
4196579-31	10-14	–
4196579-31	10-15	–
▌4196579-37	10-12	–
▌4196579-37	10-13	–
4196579-7	10-12	13
4196579-9	10-13	17
4196580-1	10-14	2
4196580-1	10-15	5
4196595-11	10-19	4
4196597-1	10-12	9
4196597-1	10-13	13
4196600-11	10-4	23
4196652-101	10-18	22
4196652-101	10-19	5
4196652-3	10-18	20
4196652-7	10-21	1
4199003-101	10-33	18
4199003-103	10-33	–
4199003-11	10-33	–
4199005-901	10-29	–
4199006-5	10-36	7
4199008-7	9-1	24
4199008-8	9-1	23
4199011-3	9-4	24
4199011-3	9-7	–
4199017-1	10-24.1	–
4199019-11	10-27	9
4199019-13	10-27	11
4199019-15	10-27	1
4199019-17	10-27	2
4199019-19	10-27	3
4199019-21	10-27	12
4199041-1	10-33	3
4199041-13	10-33	5
4199042-11	10-17	12
4199042-13	10-17	12
4199042-27	10-17	26
4199045-103	9-1	23
4199045-105	9-1	25
4199045-109	9-1	23
4199045-111	9-1	25
4199045-131	9-1	23
4199045-133	9-1	25
4199046-1	9-4	25
4199046-1	9-7	–
4199046-3	9-4	23
4199046-3	9-6	–

PART NUMBER INDEX

Part Number	Figure	Item
4199046-3-R	9-6	–
4199046-R	9-4	23
▌4199049-1	3-21	–
4199052-11	10-16	7
4199057-1	6-2	1
4199057-13	6-2	4
4199057-15	6-2	4
4199057-3	6-2	1
4199059-1	10-16	20
4199059-3	10-16	20
4199067-1	3-21	150
4199067-101	3-21	190
4199067-3	3-21	160
4199067-5	3-21	170
4199067-7	3-21	180
▌4199067-9	3-21	185
4199070-1	10-24.2	–
4199072-11	9-4	33
4199072-13	10-23	12
4199072-13	9-4	34
4199080-901	9-4	25
4199080-901	9-7.2	–
4199080-903	9-4	23
4199080-903	9-7.1	–
▌4199082-11	10-33	6
4200000-( )	3-8	43
4200000-10	3-8	–
4200000-101	3-8	–
4200000-103	3-8	10
4200000-104	3-8	11
4200000-9	3-8	–
4200002-11	3-8	5
4200008-11	3-8	20
4200009-11	3-8	7
4200009-13	3-8	6
4200011-7	3-8	19
4200017-1	10-30	8
4200017-1	3-8	30
4200017-2	10-30	8
4200017-2	3-8	31
4212101-101	10-29	–
4212101-5	10-29	–
4212101-7	10-29	–
4212101-9	10-29	–
4212102-11	10-29	50
4212103-19	10-28	12
4212103-21	10-28	8
4212103-21	10-29	160
4212103-23	10-29	200
4212103-25	10-29	20
4212103-27	10-29	230
4212103-29	10-29	30
4212103-31	10-29	20
4212103-33	10-29	30
4212103-35	10-29	30
4212103-5	10-28	1
4212103-5	10-29	–
4212103-7	10-29	–
4212104-11	10-28	15
4212104-13	10-29	80
4220035-1	5-12	–
4220037	6-3	–
4220037-1	6-3	63
4220037-15	6-3	–
4220037-2	6-3	–
4220037-3	6-3	58
4220037-5	6-3	49
4220039-1	5-12	10
4220039-3	5-12	20
4220043-3	3-5	–
4220044-13	3-5	30
4220044-21	3-5	50
4220044-22	3-5	60
4220125-19	3-19	–

PART NUMBER INDEX

Part Number	Figure	Item
4220132-1	4-2	6
4220132-1	4-2	7
4220143-1	10-37	50
▌4220150-1	3-2	–
▌4220150-2	3-2	–
4220150-3	3-2	1
4220150-4	3-2	2
4220150-5	3-2	1
4220150-6	3-2	2
▌4220152-11	3-6.2	–20
▌4220152-12	3-6.2	20
▌4220152-13	3-6.2	–30
4220152-14	3-6.2	30
4220153-1	3-6.2	–
4220171-1	11-6	10
4220521-1	10-38	10
4220521-3	10-39	10
▌4220627-3	3-21	–
4230001-1	7-1	–
4230005-11	3-19	2
4230005-13	3-19	13
4230012-1	10-4	–
4230019-1	10-19	–
▌4230036-1	7-9	–
▌4230042-1	3-21	–
▌4230070-1	10-23.1	–
▌4230070-3	10-23.1	–
428-3VG	App A	–
428-3-VG	9-14	38
428-3-VG	App A	–
4-3 F5OX-SS	6-1	9
43-13-1-24	3-13	–
43-13-1-24	3-13	–
43-13-1-24	3-13	–
43-13-1-24	3-13	–
436-19	6-9	2
439SS-4-2-6	5-10	7
439SS-4-8-2-6	5-11	70
439-SS4-8-2-6	10-38	20
444-4-2-6	5-11	20
444-4-2-6	5-5	35
444-4-2-6	5-6	41
4508-1	10-33	13
▌4508-1	11-5	–
4508-1	6-11	27
4508-1	6-12	29
4508-1	6-3	–
4508-1	6-3	–
4508-1	6-3	–
▌4508-75	3-2	–
▌4516-1	3-2	–
4516-75	11-4	2
4516-75	3-2	–
4516-75	3-3	21
▌4516-75	6-3	–
4596	10-28	5
4604-12-12-0	6-1	46
464	11-6	140
4-8 F5OX-S	7-9	11
4910-50	3-4	250
4910-50	6-3	–
4941	3-3	23
4941	6-2	7
4F5BX-SS	6-1	7
4F650X-S	5-12	100
4R6BX-SS	10-20	10
5/16 Harper	6-13	7
5/16 Harper	9-13	19
500130	5-6	5
500150	5-6	10
5008-75	9-6	23
5-01-090701 Rev A	3-18	29
▌5-01-090701REV A	3-23	250
5-01-095701 Rev A	3-18	28

PART NUMBER INDEX

Part Number	Figure	Item
▌ 5-01-095701REV A	3-23	240
502	9-1	27
5045	8-3	20
506	10-28	–
506	10-29	–
506	10-33	–
5100-50	5-8	48
5100-68	5-8	41
5100-68	5-8	82
5103-62	3-17	25
51086	8-5	8
5133-18-S-PP	3-6	410
5133-18-S-PP	3-6	840
5133-25-S-PP	3-6	150
5133-25-S-PP	3-6	350
520-004	10-13	29
520-004	10-14	–
520-004	10-15	2
520-006	10-34	4
52305-A06-6	9-1	28
524-080	6-1	51
▌ 5451	3-2	–
▌ 5451	3-2	–
5451	4-5	23
5453	3-12	–
5453	9-2	–
5453	9-2	–
5480	4-5	26
58390	10-23	2
5934PD-3-A.253	10-1	3
5934PD-3-A.253	10-2	3
5934PD-3-A.253	10-3	3
5934PD-3-A.253	10-4	3
6 X1/2	4-5	18
601-6	3-16	3
▌ 601-6	3-22	260
601985-2	10-18	–
601985-2	10-18	–
601985-2	10-19	–
603817-4	10-18	–
603817-4	10-18	–
603817-4	10-19	–
603864	6-1	53
604111-1	10-18	–
604111-1	10-18	–
604111-1	10-19	–
60434	5-6	3
60607-1	6-7.3	80
60617-0	10-24.1	13
60617-1	10-1	–
60617-1	10-1	–
60617-1	10-1	–
60617-1	10-1	–
60617-1	10-2	–
60617-1	10-2	–
60617-1	10-2	–
60617-1	10-2	–
60617-1	10-24.1	13
60617-1	10-3	–
60617-1	10-3	–
60617-1	10-37	–
60617-1	10-4	–
60617-1	10-4	–
60618-1	10-1	–
60618-1	10-1	–
60618-1	10-1	–
60618-1	10-1	–
60618-1	10-18	–
60618-1	10-2	–
60618-1	10-2	–
60618-1	10-2	–
60618-1	10-2	–

PART NUMBER INDEX

Part Number	Figure	Item
60618-1	10-24.2	12
60618-1	10-29	–
60618-1	10-3	–
60618-1	10-3	–
60618-1	10-37	–
60618-1	10-4	–
60618-1	10-4	–
60618-1	5-7	–
60618-1	6-1	–
60620-1	7-9	–
60652	5-6	8
608036-1	6-1	112
▌608036-1	6-1.1	–
6-1437622-0	11-6	210
6-1616945-7	10-16	1
6-1616945-7	10-17	1
6-1616945-7	10-18	9
6-4 F5OX-S	7-9	12
6502-12	6-9	23
65143	5-6	6
6-6FBTX-SS	6-4	9
▌680	9-4	–
68-2290005-30	10-31	11
68-2290005-30	App A	–
68-2290005-34	10-32	7
6839	10-1	–
6839	10-2	–
6839	10-3	–
6839	10-4	–
68-3950902A30	10-32	4
68-3950903A30	10-32	2
68-4230020-40	10-31	6
68-4230020-40	App A	–
68-4230020-50	10-31	6
68-4230020-50	App A	–
68-4250066-30	10-31	10
68-4250066-30	App A	–
6EBTX-SS	7-9	18
6R X 3/8	App A	–
6RX1/2	App A	–
6RX3/8	9-2	64
6RX3/8	App A	–
6X1/2	App A	–
6X3/8	4-2	–
6X3/8	11-3	3
▌6X3/8	11-5	–
6X3/8	App A	–
70-0160-1056-6	3-3	26
7101SYZQE	10-4	22A
71478S	6-7.2	16
7201SYZQE	10-1	22
7201SYZQE	10-2	22
7203K2ZQE	10-36	3
726607	10-23	1
726621	7-8	30
726621	7-8.1	27
7270-1-35	10-9	13
7270-1-35	10-9	13
7270-1-5	10-1	28
7270-1-5	10-2	25
7270-1-5	10-2	27
7270-1-5	10-7	3
7270-1-5	10-7	5
7270-1-5	10-8	3
7270-1-5	10-8	5
7270-1-5	10-9	3
7270-1-5	10-9	3
7270-1-5	10-9	5
7270-1-5	10-9	5
7270-1-7 1/2	10-1	27
7270-1-7 1/2	10-2	26
7270-1-7 1/2	10-33	–
7270-1-7 1/2	10-7	4
7270-1-7 1/2	10-8	4

PART NUMBER INDEX

Part Number	Figure	Item
7270-1-7 1/2	10-9	4
7270-1-7 1/2	10-9	4
7277-5-1	10-9	6
7277-5-1 1/2	10-7	8
7277-5-1 1/2	10-8	8
7277-5-1 1/2	10-9	6
7277-5-1/2	10-9	14
7277-5-1/2	11-6	–
7277-5-1/2	11-6	–
7277-5-1/2	11-6	–
7277-5-10	10-7	9
7277-5-10	10-8	9
7277-5-10	10-9	10
7277-5-10	10-9	16
7277-5-2	10-7	6
7277-5-2	10-8	6
7277-5-2	10-9	7
7277-5-2	10-9	7
7277-5-3	10-37	30
7277-5-3	10-7	7
7277-5-3	10-8	7
7277-5-3	10-9	8
7277-5-3	10-9	8
7277-5-5	10-36	4
▌ 7277-5-5	10-9	9
732BL	11-5	140
732-RTV	10-24.2	5
732-RTV	10-33	13
▌ 732-RTV	11-5	140
732-RTV	3-3	–
732-RTV	6-3	38
7401SYZQE	10-3	22
7401SYZQE	10-4	22
748-RTV	10-24.2	5
748-RTV	10-36	18
748-RTV	10-39	20
7592	11-6	30
7641-20	10-14	1
76638	5-6	9
76640	5-6	11
76642	5-6	4
767	6-4	–
77345-09.0HG-01	7-9	15
786-4	5-11	190
786-4-CU	5-10	2
786-4-CU	5-5	43
8000B.439	10-1	2
8000B.439	10-2	2
800-28V-BAT	10-1	4
800-28V-BAT	10-2	4
800-28V-BAT	10-3	4
800-28V-BAT	10-4	4
803-28V	10-4	4
801-4	5-5	–
801-4	5-5	–
801-8	5-5	–
801-8	5-6	18
8116-B	7-9	–
82043-22420	8-5	7
82-12-120-16	3-19	18
8-218-N300-9	4-4	4
82-19-140-16	3-18	48
82-19-160-16	3-13	–
82-19-160-16	3-13	–
82-19-160-16	3-13	–
82-19-160-16	3-13	2
82-19-160-16	3-2	–
82-19-160-16	3-2	–
82-19-160-16	3-2	–
▌ 82-19-160-16	3-23	590
82-32-101-20	3-13	–
82-32-101-20	3-13	–
82-32-101-20	3-13	–
82-32-101-20	3-13	4

PART NUMBER INDEX

Part Number	Figure	Item
82-32-101-20	3-18	50
82-32-101-20	3-19	19
82-32-101-20	3-2	–
82-32-101-20	3-2	–
82-32-101-20	3-2	–
▌82-32-101-20	3-23	600
82-35-302-15	3-19	7
82-35-306-10	3-13	–
82-35-306-10	3-13	–
82-35-306-10	3-13	16
82-36-302-15	3-18	–
82-46-101-39	3-13	–
82-46-101-39	3-13	–
82-46-101-39	3-13	–
82-46-101-39	3-13	3
82-46-101-39	3-18	49
82-46-101-39	3-2	–
82-46-101-39	3-2	–
82-46-101-39	3-2	–
8-32X1/4in	6-7.2	1
8473 H5L16	App A	–
8473H5L16	7-8.1	–
8473RUPH5-L16	7-8	–
8473RUPH5-L16	App A	–
848-FSO-04-03	6-1	9
849-FSO-04X04	6-1	25
85-12-140-16	3-2	–
85-12-140-16	3-2	–
85-12-140-20	3-2	–
85-12-140-20	3-2	–
85-34-101-20	3-2	–
85-34-101-20	3-2	–
85-34-101-20	3-2	–
85-34-101-20	3-2	–
85-35-295-15	3-2	–
85-35-295-15	3-2	–
85-46-101-39	3-2	–

Part Number	Figure	Item
85-46-101-39	3-2	–
8618M25	6-8	14
8-8MTX-SS	11-1	4
8871T34	3-18	3
8871T34	3-18	12
▌8871T34	3-23	160
8RX1/2	App A	–
8x1/2	10-17	21
8X1/2	3-2	–
8X1/2	3-2	17
8X1/2	4-5	20
8X1/2	6-1.1	30
8X1/2	6-1.1	110
8X1/2	6-1.1	180
8X1/2	6-1.1	290
8X1/2	6-1.1	330
8X1/2	6-1.1	340
8X1/2	App A	–
8X3/8	6-1.1	370
90120075	6-1	61
90251A190	11-2	10
90251A190	11-2	26
▌90251A190	11-5	90
▌90251A190	6-5	13
90312A11	9-14	60
90-42130-009	10-1	–
90-42130-009	10-2	–
90-42130-009	10-3	–
90-42130-009	10-3	–
90-42130-009	10-4	–
90-42130-010	10-1	–
90-42130-010	10-2	–
90-42130-010	10-3	–
90-42130-010	10-3	–
90-42130-010	10-4	–
90-42130-011	10-1	–
90-42130-011	10-2	–

PART NUMBER INDEX

Part Number	Figure	Item	Part Number	Figure	Item
90-42130-011	10-3	–	90-42130-019	10-4	–
90-42130-011	10-3	–	90-42130-021	10-1	–
90-42130-011	10-4	–	90-42130-021	10-2	–
90-42130-012	10-1	–	90-42130-021	10-3	–
90-42130-012	10-2	–	90-42130-021	10-3	–
90-42130-012	10-3	–	90-42130-021	10-4	–
90-42130-012	10-3	–	90-42130-022	10-1	–
90-42130-012	10-4	–	90-42130-022	10-2	–
90-42130-013	10-1	–	90-42130-022	10-3	–
90-42130-013	10-2	–	90-42130-022	10-3	–
90-42130-013	10-3	–	90-42130-022	10-4	–
90-42130-013	10-3	–	90-42130-023	10-1	–
90-42130-013	10-4	–	90-42130-023	10-2	–
90-42130-015	10-1	–	90-42130-023	10-3	–
90-42130-015	10-2	–	90-42130-023	10-3	–
90-42130-015	10-3	–	90-42130-023	10-4	–
90-42130-015	10-3	–	90-42130-024	10-1	–
90-42130-015	10-4	–	90-42130-024	10-2	–
90-42130-016	10-1	–	90-42130-024	10-3	–
90-42130-016	10-2	–	90-42130-024	10-3	–
90-42130-016	10-3	–	90-42130-024	10-4	–
90-42130-016	10-3	–	90-42130-026	10-1	–
90-42130-016	10-4	–	90-42130-026	10-2	–
90-42130-017	10-1	–	90-42130-026	10-3	–
90-42130-017	10-2	–	90-42130-026	10-3	–
90-42130-017	10-3	–	90-42130-026	10-4	–
90-42130-017	10-3	–	90-42130-028	10-3	–
90-42130-017	10-4	–	90-42130-028	10-4	–
90-42130-018	10-1	–	9080221	3-1	–
90-42130-018	10-2	–	9080331	3-1	–
90-42130-018	10-3	–	9080443	3-1	–
90-42130-018	10-3	–	9080494	10-13	28
90-42130-018	10-4	–	9080494	10-14	–
90-42130-019	10-1	–	9080494	10-15	1
90-42130-019	10-2	–	90D030N-2	10-4	35
90-42130-019	10-3	–	90D030N-MOD-2	9-7.1	20
90-42130-019	10-3	–	90D030N-MOD-2	9-7.2	20

PART NUMBER INDEX

Part Number	Figure	Item
9253	7-9	15
92X9537	7-6.1	10
▌94355A182	11-5	90
▌94355A182	6-5	13
95-41-11-H6-55785	10-1	19
95-41-11-H6-55785	10-2	19
95-41-11-H6-55785	10-3	19
95-41-11-H6-55785	10-4	19
959-5	8-5	13
97CSX-2 24VDC	App A	–
A01784-6Z-1D	3-21	–
A01787-8Z-1D	6-1.1	100
A01787-8Z-1D	6-1.1	310
A01787-8Z-1D	6-12	2
A01787-8Z-1D	App A	–
A01789-8Z-1D	4-4	32
A01789-8Z-1D	4-5	–
A01789-8Z-1D	4-5	–
▌A01789-8Z-1D	6-11	4
A01789-8Z-1D	App A	–
▌A06191-8Z-1D	6-12	14
A06194-8Z-1D	6-11	13
A06194-8Z-1D	App A	–
A06195-6Z-1D	6-1.1	–
A06195-8Z-1D	3-2	–
A06195-8Z-1D	3-2	–
A06195-8Z-1D	3-2	–
A06195-8Z-1D	3-2	–
A06195-8Z-1D	3-2	–
A06195-8Z-1D	3-2	–
A06195-8Z-1D	3-2	–
A06195-8Z-1D	3-2	18
A06195-8Z-1D	4-5	–
A06195-8Z-1D	4-5	–
▌A06195-8Z-1D	4-5	–
▌A06195-8Z-1D	4-5	–
▌A06195-8Z-1D	4-5	–
▌A06195-8Z-1D	4-5	–
A06195-8Z-1D	6-1.1	–
A06195-8Z-1D	6-1.1	–
A06195-8Z-1D	6-1.1	–
A06195-8Z-1D	6-1.1	–
A06195-8Z-1D	6-1.1	–
▌A06195-8Z-1D	6-1.1	–
▌A06195-8Z-1D	6-1.1	–
A06195-8Z-1D	6-11	12
A06195-8Z-1D	6-12	14
A06195-8Z-1D	App A	–
A10K130	11-6	110
A1787-8Z1	App A	–
A1787-8Z-1	App A	–
A1789-8Z-1	App A	–
A315HI-B-28V	10-1	32
A413AHDACF-14/28	10-30	1
A4274	App A	–
A427-4	10-31	7
A427-4	App A	–
A507	10-31	3
A507	App A	–
A50828	App A	–
A508-28	10-31	4
A508-28	App A	–
A600PG28	App A	–
A600-PG-28	10-30	4
A600-PG-28	10-31	–
A600-PG-28	3-8	26
A600-PG-28	App A	–
A600PR28	App A	–
A600-PR-28	10-30	4
A600-PR-28	10-31	–
A600-PR-28	3-8	25
A600-PR-28	App A	–
A605	10-31	1

PART NUMBER INDEX

Part Number	Figure	Item
A605	App A	–
A606	10-31	12
A606	App A	–
A610	10-31	8
A610	App A	–
A612	10-31	11
A612	App A	–
A615	10-31	10
A615	App A	–
A616	10-31	9
A616	App A	–
A6194-8Z-1	App A	–
A6195-8Z-1	App A	–
▌A6196-8Z-1D	6-1.1	–
A-700	6-4	29
A-700	App A	–
A-700RD1180	App A	–
A700RD11800	5-10	1
A700RD11800	5-11	10
A700RD11800	App A	–
A8944-632-493	10-1	–
A8944-632-493	10-1	–
A8944-632-493	10-1	–
A8944-632-493	10-1	–
A8944-632-493	10-2	–
A8944-632-493	10-2	–
A8944-632-493	10-2	–
A8944-632-493	10-2	–
A8944-632-493	10-2	–
A8944-632-493	10-3	–
A8944-632-493	10-3	–
A8944-632-493	10-3	–
A8944-632-493	10-4	–
A-8970B1-327	10-1	31
A-8970B1-327	10-2	31
A-8970B1-327	10-5	5
A-8970B1-327	10-6	5
A8P150	3-3	22
AA521-4	9-8	6
AA521-4	App A	–
AA-521-4	App A	–
AA521-8	9-5	15
AA-521-9	9-8	19
AA86146	7-8	38
AA86146	7-8.1	34
▌A-A-55488-1	9-1	27
▌AA-ECD-084-480	8-3	25
ABC6114	9-4	27
ABM1M-A-C	10-39	90
ABMM-AT-C	10-24	10
ABMM-AT-C	10-24.2	4
ABMM-AT-C	10-36	14
ABMS-A	5-5	31
ABMS-A	5-6	37
AC-B283F-107	6-9	35
ACC38-A-C20	10-39	30
ACC62-A-C20	10-39	40
ACF-50	8-3	–
AD-B283101	6-9	34
AD4( )BSLF	3-3	20
AJ4-30	3-2	–
AJ4-35	3-2	–
AJ4-35	3-2	–
AJ4-35	3-2	–
AJ4-35	3-2	–
AJ4-35	3-2	–
AJ4-35	3-2	–
AJ4-40	3-2	–
AJ4-40	3-2	–
AJC19-A-C	10-36	15
AJW4-30	6-11	21
AJW4-30	6-12	23
AN100C4	9-14	37
AN104607	6-6	26

PART NUMBER INDEX

Part Number	Figure	Item
AN104608	6-6	27
AN174-21	9-13	5
AN176-15A	8-3	42
AN176-15A	8-3	55
AN176-17A	7-6	20
AN176-17A	7-6.1	19
AN176-17A	8-3	43
AN178-21	8-6	5
AN2552-3A	10-16	14
AN3-10A	10-12	18
AN3-10A	10-13	25
AN3-10A	3-18	22
AN3-10A	5-9	2
▌AN3-10A	6-1.1	410
AN3-10A	7-9	4
AN3115-1	10-33	22
AN3-11A	10-22	13
AN3-11A	4-4	18
AN3-11A	5-12	30
AN3-11A	5-8	65
AN3-11A	5-9	2
AN3-11A	7-9	4
AN3-11A	9-4	30
AN3-12	9-14	25
AN3-12A	8-3	29
AN315-3L	6-6	15
AN315-3L	6-7	4
AN315-3l	6-7	7
AN315-3L	6-8	12
AN315-3L	7-3	16
AN315-3R	3-6	570
AN315-3R	3-6	720
AN315-3R	6-6	4
AN315-3R	6-6	17
AN315-3R	6-7	2
AN315-3R	6-7	9
AN315-3R	6-8	3
AN315-3R	6-8	10
AN315-3R	7-3	14
AN315-4R	9-14	30
AN3-15A	3-11	3
AN3-15A	6-10	19B
AN315C4R	10-17	8
AN316-4	6-8	16
AN316-4L	9-14	6
AN316-4L	9-14	11
AN316-4L	9-2	23
AN316-4L	9-5	5
AN316-4L	9-5	21
AN316-4L	9-8	17
AN316-4R	6-7	22
AN316-4R	6-7.2	19
AN316-4R	9-14	5
AN316-4R	9-14	10
AN316-4R	9-2	21
AN316-4R	9-5	3
AN316-4R	9-5	19
AN316-4R	9-8	15
AN316-5L	9-13	13
AN316-5L	9-15	25
AN316-5L	9-5	–
AN316-5R	11-2	6
AN316-5R	11-2	22
AN316-5R	9-13	11
AN316-5R	9-15	26
AN316-5R	9-5	–
AN316-6R	3-17	16
AN316-6R	3-18	4
AN316-6R	3-18	13
▌AN316-6R	3-23	130
AN316-7	6-6	3
AN316-8	5-9	10
AN316-8R	5-9	10
AN3-16A	6-14	3

PART NUMBER INDEX

Part Number	Figure	Item
AN3-16A	9-1	7
AN3-16A	9-9	19
AN3-17A	3-9	9
AN320-4	9-10	13
AN320-6	9-11	11
AN320-6	9-12	27
AN320-7	9-11	9
AN320-8	9-12	33
AN3-20A	3-10	6
AN3-20A	4-6	12
AN3-3A	10-12	4
AN3-3A	10-13	21
AN3-3A	11-1	32
AN3-3A	6-14	6
AN3-3A	6-3	33
AN3-3A	9-2	47
AN3-3A	9-2	57
AN3-3A	9-9	8
AN340-2	10-23	10
AN340-4	9-3	37
AN340-6	10-1	–
AN340-6	10-2	–
AN340-6	10-3	–
AN340-8	10-1	–
AN340-8	10-2	–
AN340-8	10-21	7
AN340-8	10-22	9
AN340-8	10-24	7
AN340-8	10-3	–
AN340-8	10-4	–
AN340-8	11-2	11
AN340-8	11-2	27
AN340-8	5-8	18
AN340-8	5-8	58
AN340-8	6-1	82
AN340-8	6-1	109
AN340-832	10-20	8
AN340-832	5-8	87
AN340-832	6-1	31
AN340-832	6-4	15
AN340-832	9-12	39
AN345-10	6-7.1	10
AN3-4A	10-12	14
AN3-4A	10-13	18
AN3-4A	10-14	5
AN3-4A	10-14	10
AN3-4A	10-14	14
AN3-4A	10-18	7
AN3-4A	10-18	30
AN3-4A	3-18	22
AN3-4A	3-18	45A
AN3-4A	3-8	15
AN3-4A	5-5	56
AN3-4A	6-11	24
AN3-4A	6-12	26
AN3-4A	6-9	3
AN3-4A	6-9	31
AN3-4A	9-4	32
AN3-5	9-14	45
AN3-5A	3-18	45
AN3-5A	3-9	15
AN3-5A	4-2	26
AN3-5A	6-10	19A
AN3-5A	6-10	9
AN3-5A	6-3	23
AN3-5A	6-9	33
AN3-5A	7-10	12
AN3-5A	7-9	7
AN3-5A	9-9	1
AN3-6	9-14	40
AN364-1032	3-4	160
AN364-1032	3-4	210
AN364-1032A	10-12	6
AN364-1032A	10-12	12

PART NUMBER INDEX

Part Number	Figure	Item
AN364-1032A	10-12	16
AN364-1032A	10-12	20
AN364-1032A	10-13	16
AN364-1032A	10-13	20
AN364-1032A	10-13	23
AN364-1032A	10-13	27
AN364-1032A	10-17	27
AN364-1032A	10-18	8
AN364-1032A	10-18	26
AN364-1032A	10-27	14
AN364-1032A	11-1	31
AN364-1032A	3-12	15
AN364-1032A	3-6	180
AN364-1032A	3-6	600
AN364-1032A	3-6	750
AN364-1032A	3-8	44
AN364-1032A	5-2	110
AN364-1032A	5-2	150
AN364-1032A	5-2	190
AN364-1032A	5-2	250
AN364-1032A	5-2	710
AN364-1032A	5-2	770
AN364-1032A	5-2	800
AN364-1032A	5-2	830
AN364-1032A	5-5	8
AN364-1032A	5-6	16
AN364-1032A	5-8	66
AN364-1032A	5-9	4
AN364-1032A	6-1	79
AN364-1032A	6-10	5
AN364-1032A	6-10	5
AN364-1032A	6-11	26
AN364-1032A	6-12	28
AN364-1032A	7-10	–
AN364-1032A	7-10	–
AN364-1032A	7-11	26
AN364-1032A	7-4	20
AN364-1032A	7-5	23
AN364-1032A	7-9	6
AN364-1032A	9-1	9
AN364-1216A	8-3	40
AN364-428A	3-6	110
AN364-428A	4-1	5
AN364-428A	4-1	23
AN364-428A	4-2	24
AN364-428A	4-6	4
AN364-428A	5-2	300
AN364-428A	8-7	28
AN364-524A	4-4	28
AN364-524A	7-4	28
AN364-524A	7-5	31
AN364-524A	7-6	5
AN364-524A	7-6.1	5
AN364-624A	3-1	330
AN364-624A	4-1	35
AN364-624A	8-3	45
AN364-632A	10-1	–
AN364-632A	10-18	14
AN364-632A	10-18	37
AN364-632A	10-19	–
AN364-632A	10-19	8
AN364-632A	10-28	11
AN364-632A	10-29	120
AN364-632A	10-29	180
AN364-632A	10-4	–
AN364-632A	11-4	7
AN364-632A	11-6	170
AN364-632A	8-7	31
AN364-832A	10-33	9
AN364-832A	11-1	19
AN364-832A	11-1	39
AN364-832A	11-5	290
AN364-832A	3-3	18
AN364-832A	5-10	5

PART NUMBER INDEX

Part Number	Figure	Item
AN364-832A	5-11	240
AN364-832A	5-12	260
AN364-832A	5-2	460
AN364-832A	5-5	42
AN364-832A	5-6	24
AN364-832A	6-1	76
AN364-832A	6-3	56
AN364-832A	6-4	7
AN364-832A	6-4	18
AN364-832A	6-9	52
AN364-832A	7-3	29
AN365-1032A	10-16	17
AN365-1032A	10-18	10
AN365-1032A	10-18	32
AN365-1032A	3-10	9
AN365-1032A	3-11	5
AN365-1032A	3-15	9
AN365-1032A	3-19	16
AN365-1032A	3-8	9
AN365-1032A	4-4	20
AN365-1032A	4-6	14
AN365-1032A	5-12	50
AN365-1032A	5-9	4
AN365-1032A	6-10	17
AN365-1032A	6-9	6
AN365-1032A	6-9	42
AN365-1032A	7-11	26
AN365-1032A	7-3	22
AN365-1032A	7-8	37
AN365-1032A	9-2	48
AN365-1032A	9-2	58
AN365-428A	3-6.1	140
AN365-428A	3-9	4
AN365-428A	4-1	12
AN365-428A	4-1	31
AN365-428A	4-2	10
AN365-428A	6-10	26
AN365-428A	6-9	39
AN365-428A	7-10	18
AN365-428A	7-3	11
AN365-428A	7-8.2	80
AN365-524A	4-1	9
AN365-524A	4-1	28
AN365-524A	4-2	14
AN365-524A	4-3	8
AN365-524A	4-4	25
AN365-524A	4-6	7
AN365-524A	6-13	8
AN365-524A	6-6	20
AN365-524A	8-1	16
AN365-524A	8-2	16
AN365-624A	4-2	21
AN365-624A	4-3	4
AN365-624A	7-6	22
AN365-624A	7-6.1	21
AN365-624A	8-3	57
AN365-632A	4-4	13
AN365-832	9-14	62
AN365-832A	10-18	17
AN365-832A	3-13	29
AN365-832A	9-14	62
AN3-6A	10-14	9
AN3-6A	10-14	13
AN3-6A	6-9	3
AN3-6A	7-3	17
AN3-6A	7-9	4
AN370-3	6-9	56
AN3-7A	6-10	13
AN3-7A	6-9	29
AN3-7A	7-3	17
AN3-7A	7-3	19
AN3-7A	7-9	4
AN380-4-8	8-3	24
AN381-2-10	3-6.1	90

PART NUMBER INDEX

Part Number	Figure	Item	Part Number	Figure	Item
AN381-2-10	9-15	22	AN4-14	9-15	38
AN381-2-12	9-11	10	AN4-14A	4-1	10
AN381-2-16	9-15	14	AN4-14A	4-1	29
AN381-2-7	9-14	18	AN416-1	9-1	27
AN381-2-8	6-1	86	AN4-17A	3-9	5
AN381-2-8	9-10	6	AN4-17A	3-12	7
AN381-2-8	9-13	8	AN4-17A	3-18	33
AN381-3-12	9-1	35	AN4-17A	7-8.2	59
AN381-3-12	9-12	28	AN4-20A	3-12	7
AN381-3-12	9-14	43	AN4-21A	3-9	19
AN381-3-16	8-6	9	AN4-21A	6-9	37
AN381-3-16	9-12	34	AN4-22A	3-9	2
AN381-3-8	10-33	4	AN4-22A	6-9	41
AN386-2-7A	7-11	24	AN4-25A	3-12	7
AN386-2-8A	6-10	3	AN4-26A	3-12	7
AN386-2-8A	6-10	3	AN42B-14A	3-4	180
AN386-2-8A	7-8	35	AN4-33A	4-2	8
AN386-2-9A	6-10	3	AN4-34A	4-1	3
AN386-2-9A	7-10	–	AN4-34A	4-1	24
AN386-2-9A	7-10	–	AN4-36A	4-6	2
AN386-2-9A	7-4	18	AN4-37A	4-1	21
AN386-2-9A	7-5	21	AN4-37A	4-2	22
AN3-8A	11-1	29	AN4-3A	10-18	27
AN393-9	3-2	–	AN4-3A	7-8	22
AN3H3A	6-7.1	3	AN4-3A	7-8.1	19
AN3H-3A	7-11	28	AN4-4A	5-12	80
AN3H4A	9-12	36	AN4-5A	3-18	31
AN3H5A	7-3	2	AN4-5A	5-12	80
AN3H5A	7-10	12	AN4-5A	8-7	26
AN4076-1	7-8	8	AN4-6A	3-18	37
AN4076-1	7-8.1	5	AN4-6A	7-6	16
AN4-10A	3-8	3	AN4-6A	7-6.1	15
AN4-11	9-13	9	AN470AD3-5	3-5	70
AN4-11A	3-10	10	AN4-7A	3-18	40
AN4-13	9-15	28	AN4-7A	6-10	23
AN4-13	9-15	38	AN4C5A	10-17	4
AN4-14	9-10	1	AN4C6A	10-17	5

PART NUMBER INDEX

Part Number	Figure	Item
AN4H10A	8-5	17
AN4H15A	8-5	28
AN4H3A	5-1	6
AN4H-4A	8-7	25
AN4H-4A	9-12	17
AN4-7A	7-10	15
AN4H5A	7-3	9
AN4H7A	7-10	15
AN4-XXX	10-24.1	16
AN502-10-10	9-12	36
AN502-10-10	9-3	39
AN502-10-12	7-11	17
AN502-10-8	9-3	16
AN503-10-10	9-10	15
AN503-10-10	9-12	11
AN503-10-18	9-15	4
AN503-10-6	11-2	15
AN503-10-6	11-2	32
AN503-8-6	6-11	5
AN503-8-6	6-12	5
AN503-8-6	9-3	29
AN503-8-8	8-2	49
AN503-8-8	9-3	9
AN507-1024R7	6-4	22
AN507-1032R14	10-17	14
AN507-1032R8	3-19	14
AN507-632R4	10-30	5
AN507-632R4	3-8	29
AN507-632R7	10-30	7
AN507-632R7	3-8	28
AN507-6R8	3-16	7
AN507-832R-10	9-9	11
AN507-832R7	4-5	19
AN507-832R8	9-7.1	8
AN507-832R8	9-7.1	10
AN507-832R8	9-7.2	8
AN507-832R8	9-7.2	10
AN507-8R6	6-5	5
AN507-8R8	6-5	6
AN509-10R10	3-6.1	230
AN509-8R10	11-5	110
AN509-8R10	6-5	12
AN509-8R14	6-5	16
AN509-8R16	11-1	46
AN5-11	9-13	15
AN5-11A	7-5	28
AN5-12A	4-2	17
AN5-13A	4-2	17
AN5-13A	6-1	93
AN515-4R12	9-3	35
AN515-6R8	11-4	3
AN515-6R8	11-5	210
AN515-8-10	5-12	250
AN515-8-12	5-12	300
AN515-832R7	5-8	88
AN515-8R10	10-21	4
AN515-8R10	10-24.1	4
AN515-8R10	3-2	–
AN515-8R10	3-2	–
AN515-8R10	3-2	–
AN515-8R10	5-10	8
AN515-8R10	6-3	30
AN515-8R10	6-4	14
AN515-8R12	6-1	29
AN515-8R14	10-21	8
AN515-8R14	10-23	3
AN515-8R14	7-3	27
AN515-8R6	11-1	42
AN515-8R7	11-1	37
AN515-8R7	11-2	10
AN515-8R7	11-2	26
AN515-8R7	5-6	22
AN515-8R7	5-8	19
AN515-8R7	5-8	59

PART NUMBER INDEX

Part Number	Figure	Item
AN515-8R7	9-7.1	23
AN515-8R7	9-7.2	23
AN515-8R8	10-20	5
AN515-8R8	10-24.1	4
AN515-8R8	11-1	17
AN515-8R8	5-10	3
AN515-8R8	5-11	130
AN515-8R8	6-1	81
AN515-8R8	6-1	108
AN515-8R8	6-4	5
AN515-8R8	6-4	19
AN515-8R8	6-7.2	8
AN515-8R9	10-22	6
AN515-8R9	10-24	4
AN5-15A	4-2	12
AN515B6R10	10-1	–
AN515B6R10	10-1	–
AN515B6R10	10-2	–
AN515B6R10	10-2	–
AN515B6R10	10-3	–
AN515B6R10	App A	–
AN515-B6R10	App A	–
AN515B6R14	10-4	–
AN515B6R16	10-1	–
AN515B6R16	10-1	–
AN515B6R16	10-1	–
AN515B6R16	10-1	–
AN515B6R16	10-2	–
AN515B6R16	10-2	–
AN515B6R16	10-2	–
AN515B6R16	10-2	–
AN515B6R16	10-2	–
AN515B6R16	10-3	–
AN515B6R16	10-3	–
AN515B6R16	10-3	–
AN515B6R16	10-4	–
AN515B6R16	10-4	–

Part Number	Figure	Item
AN515B6R16	10-4	–
AN515B6R4	10-10	6
AN515B6R7	10-1	–
AN515B6R7	10-2	–
AN515B6R7	10-3	–
AN515B6R7	10-3	–
AN515B6R7	10-4	–
AN515B8R8	10-1	–
AN515B8R8	10-2	–
AN515B8R8	10-3	–
AN515B8R8	10-4	–
AN5-16	9-13	18
AN5-16A	4-3	6
AN5-16A	4-4	24
AN520-10-“X”	8-7	24
AN520-10R16	5-5	5
AN520-10R16	5-6	13
▌AN525-10R10	3-6	590
▌AN525-10R10	3-6	740
AN525-10R10	5-1	20
AN525-10R10	5-3	15
AN525-10R10	5-4	15
AN525-10R10	6-3	2
AN525-10R10	6-3	37
AN525-10R10	6-3	39
AN525-10R10	7-9	9
▌AN525-10R12	3-6	640
▌AN525-10R12	3-6	820
AN525-10R12	3-8	21
AN525-10R12	5-2	170
AN525-10R12	6-3	42
AN525-10R12	7-9	9
AN525-10R14	3-8	21
AN525-10R14	3-8	32
AN525-10R14	5-2	130
AN525-10R14	7-9	9
AN525-10R16	5-2	220

PART NUMBER INDEX

Part Number	Figure	Item
AN525-10R18	5-1	15
▌AN525-10R6	5-1	19
AN525-10R6	6-3	3
AN525-10R6	6-3	6
AN525-10R6	7-1.1	100
▌AN525-10R7	5-1	–
AN525-10R7	5-3	14
AN525-10R7	5-4	14
AN525-10R7	6-3	9
AN525-10R7	6-3	9
AN525-10R8	11-6	80
AN525-10R8	3-13	30
AN525-10R8	3-19	10
▌AN525-10R8	5-1	–
AN525-10R8	5-3	17
AN525-10R8	5-4	17
AN525-416R8	5-1	23
AN525-416R10	5-1	23
AN525-416R10	5-1	28
AN525-416R10	5-4	32
AN525-416R14	5-1	23A
AN525-416R6	5-3	13
AN525-416R6	5-4	13
AN525-632R10	3-8	27
AN525-832R10	3-2	31
AN525-832R10	3-3	–
AN525-832R10	5-11	80
AN525-832R16	11-1	47
AN525-832R6	3-8	42
AN525-832R7	10-38	70
AN525-832R7	11-6	70
AN525-832R7	3-8	42
AN525-832R7	5-2	440
AN525-832R7	6-6	28
AN525-832R7	6-8	22
AN525-832R8	10-33	7
AN525-832R8	10-38	30
AN525-832R8	11-5	300
AN525-832R8	3-3	16
AN525-832R8	3-8	42
AN525-832R8	5-3	16
AN525-832R8	5-4	16
AN525-8R7	11-1	23
AN525-8R7	4-5	13
AN525-8R7	5-11	220
AN525-8R7	5-5	40
AN525-8R7	6-9	50
AN525-8R8	6-1.1	230
AN526-1032R6	3-6	220
▌AN526-1032R6	3-6	260
AN526-1032R6	3-6	390
▌AN526-1032R6	3-6	490
AN526-1032R6	3-6	950
AN526-1032R6	5-2	470
AN526-1032R8	3-6	160
AN526-1032R8	3-6	260
▌AN526-1032R8	3-6	390
AN526-1032R8	3-6	450
AN526-1032R8	3-6	590
AN526-1032R8	3-6	640
AN526-1032R8	3-6	700
AN526-1032R8	3-6	740
AN526-1032R8	3-6	820
AN526-1032R8	3-6	870
AN526-1032R8	3-6	910
▌AN526-1032R8	3-6	950
AN526-1032R8	3-6.1	170
AN526-632R	10-29	140
AN526-632R10	10-30	6
AN526-632R12	11-5	250
AN526-632R4	6-7.1	2
AN526-632R6	10-1	–
AN526-632R6	10-35	4
AN526-632R6	3-21	–

PART NUMBER INDEX

Part Number	Figure	Item
AN526-632R6	3-4	30
AN526-632R6	3-4	230
AN526-632R7	10-18	12
AN526-632R7	10-18	35
AN526-632R7	10-19	–
AN526-632R7	10-19	6
AN526-632R7	10-29	10
AN526-632R7	11-4	5
AN526-632R8	10-28	7
AN526-632R8	10-29	100
AN526-632R8	3-4	90
AN526-632R8	3-4	260
AN526-6R6	10-24.1	7
AN526-832R7	9-14	63
AN526-832R8	10-28	16
AN526-832R8	10-29	90
AN526-832R8	3-13	27
AN526-832R8	3-18	9
AN526-832R8	3-18	18
▌AN526-832R8	3-21	310
▌AN526-832R8	3-23	120
AN526-832R8	6-12	9
AN526-832R8	9-1	39
AN526-832R8	9-14	63
AN526-832R-8	9-9	9
AN526-8R8	9-14	63
AN526C-1032R9	3-4	190
AN530-4-6	11-5	190
▌AN530-6R4	3-6	700
▌AN530-6R4	3-6	870
AN530-6R6	10-1	15
AN530-6R6	10-10	8
AN530-6R6	10-2	15
AN530-6R6	10-3	15
AN530-6R6	10-4	15
AN530-6R6	11-4	12
AN530-6R6	4-2	–
AN530-8R8	4-2	–
AN531-6R12	3-17	–
AN531-6R8	3-16	4
▌AN531-6R8	6-1.1	400
AN531-8R8	3-2	–
AN5-33A	7-6	3
AN5-33A	7-6	3
AN5-33A	7-6	3
AN5-33A	7-6.1	3
▌AN5-35A	4-1	26
AN5-35A	4-1	7
AN5-35A	4-6	5
AN5-37A	4-1	26
AN5-37A	4-1	33
AN5-37A	6-13	6
AN5-43A	8-1	5
AN5-43A	8-2	5
AN5-44A	8-1	5
AN5-44A	8-2	5
AN5-4A	4-6	9
AN5-4A	7-8.1	33
AN5534-2	10-21	2
AN5546-1	7-8	38
AN5546-1	7-8.1	34
AN5816-2	10-33	16
AN5H-45A	8-1	2
AN5H-45A	8-2	2
AN5H-46A	8-1	2
AN5H-46A	8-2	2
AN5H-6A	8-1	1
AN5H-6A	8-2	1
AN6-20A	4-3	2
AN6227-11	7-11	8
AN6227-3	7-11	12
AN6227-6	7-8	–
AN6227-6	7-9	–
AN6-23A	4-2	19

PART NUMBER INDEX

Part Number	Figure	Item
AN654-832A	11-2	14
AN654-832A	11-2	30
AN690-10	3-14	–
AN742F10	6-4	4
AN742F8	6-4	3
AN743-13	11-2	2
AN743-13	5-5	21
AN743-13	5-6	27
AN75-A12	8-3	54
AN75-A6	8-3	53
AN7H-7A	8-7	33
AN814-2D	8-2	32
AN814-2DL	5-8	52
AN814-2DL	7-1	13
AN814-2DL	7-1.1	200
AN814-2DL	7-11	7
AN814-2DL	7-5	10
AN814-2DL	8-5	26
AN814-4DL	6-9	24
AN814-5DL	7-8	2
AN814-5DL	7-8.1	2
AN814-6DL	6-9	13
AN814-8DL	6-9	11
AN814-8DL	7-5	7
AN815-6J	6-4	24
AN816-4D	5-12	110
AN816-4D	5-9	11
AN816-6D	7-8	9
AN816-6D	7-8.1	6
AN816-8D	11-2	8
AN816-8D	11-2	24
AN816-8J	11-2	7
AN816-8J	11-2	23
AN818-4D	10-33	–
AN818-4D	6-3	61
▌AN818-4J	6-3	61
AN824-6J	6-3	12
AN824-6J	6-4	36
AN824-8D	11-1	10
AN824-8D	11-3	7
AN824-8D	5-5	2
AN824-8J	11-1	7
AN832-4D	6-3	50
AN833-4	6-1	38
AN833-6J	6-3	14
AN833-6J	6-4	33
AN900-10	7-9	24
AN900-6	7-8	1
AN900-6	7-8.1	1
AN900-8	7-11	10
AN924-4	6-1	40
AN924-4D	5-2	430
AN924-4D	6-3	51
▌AN924-4W	5-2	430
▌AN924-4W	6-3	51
AN924-6D	5-7	10
AN924-6J	6-3	16
AN924-6J	6-4	34
AN929-4D	10-33	21
AN929A4J	6-1	68
AN929A4S	6-3	64
▌AN929L8J	6-4	–
AN931-10-20	10-13	30
AN931-3-5	10-1	–
AN931-3-5	10-2	–
AN931-3-5	10-3	–
AN931-3-5	10-4	41
AN931-3-5	6-9	5
AN931-3-9	6-1.1	270
AN931-4-12	7-7	7
AN931-4-7	5-8	–
AN931-5-12	3-2	–
AN931-5-12	3-2	–
AN931-8-13	7-7	7

PART NUMBER INDEX

Part Number	Figure	Item	Part Number	Figure	Item
AN931-8-20	7-7	6	AN960-10	3-6	580
AN932-3D	7-8	3	AN960-10	3-6	730
AN935-10	6-7.1	11	AN960-10	3-8	16
AN935-4	9-3	36	AN960-10	4-6	13
AN935-416L	7-8	21	AN960-10	5-11	270
AN935-416L	7-8.1	18	AN960-10	5-12	40
AN935-6	10-1	–	AN960-10	5-2	700
AN935-6	10-2	–	AN960-10	5-2	760
AN935-6	10-3	–	AN960-10	5-2	790
AN935-8	10-21	6	AN960-10	5-2	820
AN935-8	10-22	8	AN960-10	5-8	23
AN935-8	10-24	6	AN960-10	5-8	55
AN935-8	6-1	32	AN960-10	5-8	91
AN935-8	6-1	74	AN960-10	5-9	3
AN935-8	6-1	111	AN960-10	6-1	36
AN935B8	10-1	–	AN960-10	6-1	85
AN935B8	10-2	–	AN960-10	6-10	4
AN935B8	10-3	–	AN960-10	6-10	4
AN935B8	10-4	–	AN960-10	6-10	16
AN936-416	11-5	260	AN960-10	6-14	4
AN936A2	10-23	9	AN960-10	6-2	9
AN936A416	11-1	25	AN960-10	6-7.1	12
AN936-A416	4-5	15	AN960-10	6-9	4
AN936-A516	11-2	5	AN960-10	7-10	13
AN936-A516	11-2	21	AN960-10	7-11	25
AN936A716	6-6	2	AN960-10	7-4	19
AN936-B4	9-3	–	AN960-10	7-5	22
AN938-8	10-20	7	AN960-10	7-8	36
AN950-516L	4-3	9	AN960-10	8-3	–
AN960-10	10-12	5	AN960-10	8-3	30
AN960-10	10-12	11	AN960-10	8-7	23
AN960-10	10-13	15	AN960-10	9-14	41A
AN960-10	10-13	22	AN960-10	9-14	46
AN960-10	10-16	16	AN960-10	9-3	17
AN960-10	10-17	3	AN960-10L	10-12	15
AN960-10	3-12	14	AN960-10L	10-12	19
AN960-10	3-6	170	AN960-10L	10-13	19

PART NUMBER INDEX

Part Number	Figure	Item
AN960-10L	10-13	26
AN960-10L	10-14	6
AN960-10L	10-16	12
AN960-10L	10-17	11
AN960-10L	10-17	25
AN960-10L	10-18	19
AN960-10L	10-18	25
AN960-10L	10-19	2
AN960-10L	10-27	15
AN960-10L	11-1	30
AN960-10L	3-11	4
AN960-10L	3-12	13
AN960-10L	3-15	8
AN960-10L	3-19	15
AN960-10L	3-8	8
AN960-10L	4-2	28
AN960-10L	4-4	19
AN960-10L	5-2	100
AN960-10L	5-2	140
AN960-10L	5-2	180
AN960-10L	5-2	240
AN960-10L	5-5	7
AN960-10L	5-6	15
AN960-10L	5-9	3
AN960-10L	6-10	14
AN960-10L	6-10	16
AN960-10L	6-10	20
AN960-10L	6-11	7
AN960-10L	6-11	25
AN960-10L	6-12	7
AN960-10L	6-12	27
AN960-10L	6-6	10
AN960-10L	6-7	13
AN960-10L	6-7.1	5
AN960-10L	6-9	4
AN960-10L	7-11	27
AN960-10L	7-3	18
AN960-10L	7-9	5
AN960-10L	8-3	31
AN960-10L	8-7	23
AN960-10L	9-1	8
AN960-10L	9-10	8
AN960-10L	9-12	37
AN960-10L	9-14	26
AN960-10L	9-14	41
AN960-10L	9-15	5
AN960-10L	9-2	43
AN960-10L	9-2	53
AN960-10L	9-4	31
AN960-10L	9-6	36
AN960-10L	9-7.1	29
AN960-10L	9-8	2
AN960-10L	9-9	6
AN960-3	6-3	24
AN960-416	3-8	4
AN960-416	4-1	4
AN960-416	4-1	22
AN960-416	4-2	11
AN960-416	4-6	3
AN960-416	5-12	90
AN960-416	6-10	24
AN960-416	7-1	17
AN960-416	7-8	20
AN960-416	7-8.1	17
AN960-416	8-5	16
AN960-416	9-13	6
AN960-416	9-15	31
AN960-416L	10-18	28
AN960-416L	10-24.1	17
AN960-416L	3-12	4
AN960-416L	3-6	120
AN960-416L	3-6.1	130
AN960-416L	3-8	4
AN960-416L	3-9	3

PART NUMBER INDEX

Part Number	Figure	Item	Part Number	Figure	Item
AN960-416L	4-1	11	AN960-516L	4-6	10
AN960-416L	4-1	30	AN960-516L	5-8	13
AN960-416L	4-2	9	AN960-516L	6-1	92
AN960-416L	5-2	310	AN960-516L	6-1	94
AN960-416L	6-1	20	AN960-516L	7-2	12
AN960-416L	6-10	24	AN960-516L	7-3	31
AN960-416L	9-10	2	AN960-516L	7-4	26
AN960-416L	9-10	12	AN960-516L	7-5	29
AN960-416L	9-12	16	AN960-516L	8-1	6
AN960-416L	9-15	29	AN960-516L	8-2	6
AN960-416L	9-2	2	AN960-516L	9-13	16
AN960-416L	9-5	8	AN960-516L	9-15	20
AN960-416L	9-8	23	AN960-516L	9-5	24
AN960-4L	3-3	–	AN960-6	10-1	–
AN960-4L	3-3	24	AN960-6	10-1	–
AN960-4L	6-7.2	5	AN960-6	10-2	–
AN960-4L	7-8.2	70	AN960-6	10-3	–
AN960-4L	9-3	41	AN960-6	11-4	6
AN960-516	4-1	8	AN960-6	4-4	12
AN960-516	4-1	27	AN960-616	3-1	220
AN960-516	4-2	13	AN960-616	3-1	320
AN960-516	4-3	7	AN960-616	3-1	350
AN960-516	4-6	6	AN960-616	3-1	370
AN960-516	6-1	94	AN960-616	3-1	400
AN960-516	6-1	102	AN960-616	4-1	14
AN960-516	7-3	31	AN960-616	4-3	3
AN960-516	7-4	26	AN960-616	7-6	21
AN960-516	7-5	29	AN960-616	7-6.1	20
AN960-516	7-6	4	AN960-616	7-7	3
AN960-516	7-6	4	AN960-616	9-12	26
AN960-516	7-6	4	AN960-616L	4-2	20
AN960-516	7-6.1	4	AN960-616L	4-3	5
AN960-516	8-1	6	AN960-616L	6-7.2	15
AN960-516	8-2	6	AN960-616L	9-12	21
AN960-516	9-13	21	AN960-6L	10-18	13
AN960-516L	4-2	18	AN960-6L	10-18	36
AN960-516L	4-4	23	AN960-6L	10-19	–

PART NUMBER INDEX

Part Number	Figure	Item
AN960-6L	10-19	7
AN960-6L	10-28	10
AN960-6L	10-29	110
AN960-6L	10-29	150
AN960-6L	10-29	170
AN960-6L	10-4	–
AN960-6L	11-6	160
AN960-6L	3-4	40
AN960-6L	3-4	240
AN960-716	5-2	420
AN960-716	8-7	32
AN960-716L	9-11	8
AN960-8	10-20	6
AN960-8	10-33	8
AN960-8	11-1	38
AN960-8	11-2	13
AN960-8	11-2	29
AN960-8	5-12	270
AN960-8	5-12	320
AN960-8	5-8	15
AN960-8	6-1	75
AN960-8	6-1	110
AN960-8	6-2	9
AN960-8	6-3	31
AN960-8	6-4	17
AN960-816	5-9	8
AN960-816	6-1	39
AN960-816	8-6	6
AN9608L	6-7.2	10
AN960-8L	10-17	22
AN960-8L	10-18	16
AN960-8L	10-21	5
AN960-8L	10-22	7
AN960-8L	10-24	5
AN960-8L	10-30	3
AN960-8L	11-1	18
AN960-8L	11-5	280
AN960-8L	3-13	28
AN960-8L	3-2	–
AN960-8L	3-2	–
AN960-8L	3-2	–
AN960-8L	3-2	–
AN960-8L	3-2	–
AN960-8L	3-2	–
AN960-8L	3-3	17
AN960-8L	5-10	4
AN960-8L	5-11	210
AN960-8L	5-11	230
AN960-8L	5-2	450
AN960-8L	5-5	41
AN960-8L	5-6	23
AN960-8L	5-8	7
AN960-8l	5-8	33
AN960-8L	5-8	74
AN960-8L	6-1	33
AN960-8L	6-1.1	240
AN960-8L	6-12	10
AN960-8L	6-3	55
AN960-8L	6-4	6
AN960-8L	6-4	16
AN960-8L	6-9	51
AN960-8L	8-1	33
AN960-8L	8-2	38
AN960-8L	9-14	64
AN960-8L	9-3	10
AN960-8L	9-3	31
AN960-8L	9-9	10
AN960-916	6-3	15
AN960-916	6-4	32
AN960B8	10-1	–
AN960B8	10-2	–
AN960B8	10-3	–
AN960B8	10-4	–
AN960C10	10-16	3

PART NUMBER INDEX

Part Number	Figure	Item	Part Number	Figure	Item
AN960C10	10-16	10	AN960D10L	9-10	14
AN960C10	6-13	9	AN960D10L	9-4	7
AN960C10	6-14	7	AN960D10L	9-4	21
AN960C10	6-6	25	AN960D3L	10-28	14
AN960C10	6-8	6	AN960D3L	10-29	220
AN960C10L	6-1	80	AN960D416	11-5	230
AN960C10L	6-6	23	AN960D416	6-9	38
AN960C10L	6-8	6	AN960D416	9-14	15
AN960C1216	8-3	39	AN960D416	9-14	16
AN960C416	7-10	16	AN960D416	9-2	8
AN960C416L	10-17	6	AN960D416L	11-5	220
AN960C416L	10-17	16	AN960D416L	9-14	15
AN960C416L	10-18	–	AN960D416L	9-2	4
AN960C416L	6-8	20	AN960D516	8-1	3
AN960C416L	7-10	16	AN960D516	8-2	3
AN960C516	6-1	56	AN960D516	8-3	52
AN960C516L	10-17	30	AN960D516L	8-1	3
AN960D10	10-18	3	AN960D516L	8-2	3
AN960D10	10-19	–	AN960D516L	10-4	–
AN960D10	10-23	6	AN960D616	8-3	44
AN960D10	11-2	16	AN960D616	9-1	32
AN960D10	11-2	31	AN960D616L	9-1	33
AN960D10	11-6	90	AN960D8	3-2	23
AN960D10	6-8	18	AN960D8	8-1	18
AN960D10	6-9	30	AN960D8	8-2	18
AN960D10	8-7	23	AN960D8	8-3	36
AN960D10	9-1	21	AN960D8L	10-28	10
AN960D10L	10-17	28	AN960D8L	10-33	8
AN960D10L	10-18	31	AN960D8L	3-3	17
AN960D10L	10-25	7	AN960KD10L	9-4	21
AN960D10L	10-26	8	AN960PD10	10-16	22
AN960D10L	11-6	100	AN960PD10	7-3	3
AN960D10L	3-2	–	AN960PD10L	3-6.1	210
AN960D10L	3-2	25	AN960PD10L	3-6.1	240
AN960D10L	3-21	–	AN960PD10L	3-8	22
AN960D10L	6-8	18	AN960PD416	7-3	10
AN960D10L	8-7	23	AN960PD416	7-6	17

PART NUMBER INDEX

Part Number	Figure	Item
AN960PD416	7-6.1	16
AN960PD8L	7-3	28
AN964-6C	6-4	31
AN970-3	5-2	230
AN970-3	6-12	30
AN970-3	6-3	25
AN970-3	6-3	26
AN975-3	6-10	4
AN975-3	7-5	22
AN975-3	7-10	–
AN975-3	7-10	–
ANL100	App A	–
ANL-100	10-16	6
ANL-100	10-17	15
ANL-100	App A	–
ANL150	App A	–
ANL-150	10-17	15
ANL-150	App A	–
ANL35	App A	–
ANL-35	10-17	29
ANL-35	App A	–
AP-1-3-50-051	10-1	24
AP-1-3-50-051	10-2	24
AP-1-3-50-051	10-7	1
AP-1-3-50-051	10-8	1
AP-1-3-50-051	10-9	1
AP22-6	8-6	3
▌AS-N-345	10-23.1	–
AS3084-08	6-1	12
AS3209-113	6-1	54
AS3209-113	6-1	54
AS3209-113	6-1	54
AS3491-01	6-1	18
AS3492-01	6-1	55
AV-22	10-38	120
AV-22	10-39	110
B-00396-1	10-18	6
B1000-050-S	9-9	17
B1210	App A	–
B-1210	8-7	5
B-1210	App A	–
B-1GF2-B	5-9	5
B46-2 1/2	9-3	11
BPF 15/16	10-12	22
BPF 15/16	10-13	32
BPF 15/16	10-15	–
BPF-1/2	3-8	14
BPF-3/4	4-5	22
BPF-3/4	9-7	19
▌BPSPT-094-175W	10-23.1	–
C0455-039-0500M	9-6	20
C0480-035-0750-M	3-17	28
C0480-035-0750-M	3-17	34
C0480-045-0880-S	3-18	6
C0480-045-0880-S	3-18	15
▌C0480-045-0880-S	3-23	110
C0600-063-1250	3-17	22
C102780	3-16	15
C102780	3-18	25
C145712	6-7	17
C145712	6-7	18
C148740	7-4	22
C148740	7-5	25
C23-805	10-4	29
C23-805	10-4	29
C23-806	10-4	30
C23-806	10-4	30
C23-807	10-4	31
C23-807	10-4	31
C307PS	10-4	–
CA3106F10-6S	10-1	–
CA3106F10-6S	10-2	–
CA3106F10-6S	10-3	–
CA3106F12S3SF80	5-12	200

PART NUMBER INDEX

Part Number	Figure	Item
CA3106F14S-5SF80	10-1	–
CA3106F14S-5SF80	10-1	–
CA3106F14S-5SF80	10-2	–
CA3106F14S-5SF80	10-2	–
CA3106F14S-5SF80	10-2	–
CA3106F14S-5SF80	10-3	–
CA3106F14S-5SF80	10-3	–
CA3106F14S-5SF80	10-3	–
CA3106F14S-5SF80	10-3	–
CA3106F20-29SF80	10-18	–
▌CBR1M-M	10-23.1	–
CBR1M-M	10-24.1	–
CBR1M-M	10-24.2	–
CBR1M-M	10-36	–
CBR1M-M	10-39	50
▌CBR2M-M	10-23.1	–
CBR2M-M	10-24.1	–
CBR2M-M	10-24.2	–
CBR2M-M	10-36	–
CBR3I-M	10-24.1	–
CBR3I-M	10-24.2	–
CBR3I-M	10-36	–
CBR3S-M	10-24.1	–
CBR3S-M	10-24.2	–
CBR3S-M	10-36	–
CC-3251	3-3	11
CCH25-S10-C	10-38	60
CCR-264 SS-3-3	App A	–
CCR264-3-3	App A	–
▌CCR264SS-3-02	4-5	–
▌CCR264SS-3-02	4-5	–
▌CCR264SS-3-02	4-5	–
▌CCR264SS-3-02	4-5	–
▌CCR264SS-3-02	4-5	–
▌CCR264SS-3-02	4-5	–
CCR264SS-3-02	5-2	490
CCR264SS-3-02	5-2	530
CCR-264-SS-3-2	4-5	–
CCR-264-SS-3-2	4-5	–
CCR264SS-3-3	3-8	41
CCR264SS-3-3	5-8	25
CCR264SS-3-3	5-8	57
CCR264SS-3-3	5-8	93
CCR-264-SS-3-3	3-2	–
CCR-264-SS-3-3	3-2	19
CCR-264-SS-3-3	3-2	27
CCR274SS-3-02	3-20	–
CCS38-S8-C0	10-4	34
CL42498	7-1	25
CP25WB+	5-11	180
CP25WB+	6-4	30
CP8-TB	10-24.1	11
CP8-TB	10-24.2	8
CP8-TB	5-2	360
CR 17240	8-3	16
CR 17240	App A	–
CR20526	App A	–
CR2-M	10-24.1	–
CR2-M	10-24.2	10
CR2-M	10-25	4
CR2-M	10-26	4
CR2-M	10-36	13
CR2-M	10-39	60
CR3212-4-02	5-2	540
CR3212-4-02	9-6	6
CR3212-4-02	9-7	6
CR3212-4-02	App A	–
CR3212-4-03	4-4	21
CR3212-4-03	5-2	500
CR3212-4-03	5-2	510
CR3212-4-03	5-2	550
▌CR3212-4-04	3-6.2	–
▌CR3212-4-07	3-6.2	40
CR3212-4-2	App A	–

PART NUMBER INDEX

Part Number	Figure	Item
CR3213-4-02	10-19	–
CR3213-4-02	3-11	6
▌CR3213-4-02	3-6.1	160
CR3213-4-02	5-5	22
CR3213-4-02	5-6	28
CR3213-4-02	6-3	–
CR3213-4-02	9-4	15
▌CR3213-4-02	9-14	73
CR3213-4-02	App A	–
CR3213-4-03	3-10	18
CR3213-4-03	4-4	21
CR3213-4-03	6-3	–
CR3213-4-03	9-14	73
▌CR3213-4-04	3-6.2	10
CR3213-4-2	App A	–
CR3213-5-02	9-4	17
CR3213-5-03	5-2	720
CR3213-5-03	9-1	29
CR3213-5-04	9-4	–
CR3213-6-03	App A	–
CR3213-6-3	4-2	26
CR3213-6-3	App A	–
CR3214-4-02	5-3	–
CR3214-4-02	5-4	–
CR3523-6-05	9-1	7
CR3523-6-5	9-1	7
CR3523-6-5	9-1	7
CR3523-6-5	9-1	7
CR91484-4-( )	3-3	20
CRWI14809	7-1	2
CRWI14809	App A	–
CTJ122E25E	10-36	8
▌D-436-37	10-23.1	–
D110277	10-1	37
D110278	10-1	34
D1250	4-4	3
DE110963-1	10-1	35

Part Number	Figure	Item
DEU-9P	10-1	33
DEU-9S	10-1	36
DT-370-MOMF-5	7-9	26
DU08	App A	–
DU-08	App A	–
▌E-18STPA	3-6	410
▌E-18STPA	3-6	840
E9000-10	6-1	14
E9002-1	11-1	11
E9002-2	11-1	12
EA9309NA	3-10	–
EA9309NA	5-2	400
EA9359	5-11	300
▌EA9394	10-23.1	–
EA9394	5-2	850
EC-776	5-2	840
ECD001-11	8-7	13
ECD001-13	8-7	13
ECD001-15	8-7	13
ECD002-13	8-7	15
ECD009-11	9-11	3
ECD013-11	9-12	8
ECD014-11	7-6	9
ECD014-11	7-6.1	8
ECD015-11	7-10	7
ECD016-11	9-15	9
ECD030-11	9-12	–
ECD030-11	9-15	–
ECD034-11	9-3	13
ECD050-11	3-12	8
▌ECD050-11	3-16	15
▌ECD050-11	3-22	340
ECD050-11	9-15	34
ECD050-11	9-15	36
▌ECD050-15	9-12	23
ECD050-19	9-13	19
ECD066-1	9-3	3

PART NUMBER INDEX

Part Number	Figure	Item	Part Number	Figure	Item
ECD075-13	10-16	1	ECD4034-7	6-9	43
ECD075-13	10-18	9	ECD4034-9	6-9	47
ECD075-15	10-16	1	ECD4035-1	10-1	11
ECD075-15	10-18	9	ECD4035-1	10-2	11
ECD084-1	8-3	25	ECD4035-1	10-3	11
ECD091-1	8-5	20	ECD4035-5	10-4	11
ECD092-1	8-1	23	ECD4036-150	5-3	5
ECD092-1	8-1	36	ECD4036-150	5-4	5
ECD092-1	8-2	27	ECD4037-11	5-1	13
ECD092-3	8-2	40	ECD4037-11	5-4	22
ECD093-11	11-5	100	ECD4037-3	5-4	23
ECD093-11	5-11	280	ECD4038-3	10-2	9
ECD093-11	5-8	–	ECD4038-3	10-3	9
ECD093-11	6-5	–	ECD4038-4	10-2	9
ECD111-11	7-9	–	ECD4038-4	10-3	9
ECD4000-11	7-3	33	ECD4038-5	10-4	9
ECD4011-13	6-10	6	ECD4039-1	10-25	6
ECD4014-11	7-1	5	ECD4039-1	10-26	7
ECD4014-11	7-1.1	13	ECD4039-3	10-25	6
ECD4015-11	7-1	23	ECD4039-3	10-26	12
ECD4016-11	7-1	29	ECD4040-1	10-1	10
ECD4017-11	7-2	7	ECD4040-1	10-2	10
ECD4017-11	7-2	7	ECD4040-1	10-3	10
ECD4019-1	3-14	–	ECD4040-5	10-4	10
ECD4019-3	3-14	–	ECD4041-1	10-1	12
ECD4019-5	3-14	–	ECD4041-1	10-2	12
ECD4020-11	9-8	28	ECD4041-7	10-3	12
ECD4024-1	7-4	24	ECD4041-7	10-4	12
ECD4024-1	7-5	27	ECD4041-9	10-4	12
ECD4025-1	7-10	14	ECD4042-1	10-1	6
ECD4031-11	9-3	23	ECD4042-1	10-2	6
ECD4031-13	9-3	23	ECD4042-1	10-3	6
ECD4032-3	3-5	10	ECD4042-7	10-4	6
ECD4032-7	3-6.2	70	ECD4043-1	10-1	8
ECD4034-1	6-9	45	ECD4043-1	10-2	8
ECD4034-3	6-9	44	ECD4043-4	10-2	8
ECD4034-5	6-9	46	ECD4043-4	10-3	8

PART NUMBER INDEX

Part Number	Figure	Item
ECD4043-5	10-3	8
ECD4043-7	10-4	8
ECD4044-1	10-1	7
ECD4044-1	10-2	7
ECD4044-4	10-3	7
ECD4044-5	10-4	7
ECD4046-1	5-7	9
ECD4049-11	5-1	3
ECD4049-13	5-1	11
ECD4050-1	10-2	2
ECD4050-1	10-3	2
ECD4050-1	10-4	2
ECD4052-4	10-3	8
ECD4052-5	10-3	8
ECD4053-1	10-1	1
ECD4053-1	10-2	1
ECD4053-3	10-2	1
ECD4053-4	10-2	1
ECD4053-5	10-2	1
ECD4053-5	10-3	1
ECD4053-6	10-3	1
ECD4053-6	10-4	1
ECD4053-7	10-3	1
ECD4053-7	10-4	1
ECD4054-3	10-2	8
ECD4054-3	10-3	8
ECD4056-1	7-4	5
ECD4056-1	7-5	5
ECD4056-3	7-4	5
ECD4056-3	7-5	5
ECD4056-5	7-4	5
ECD4056-5	7-5	5
ECD4057-11	4-2	25
ECD4057-13	4-2	25
ECD4057-15	4-2	25
ECD4059-3	10-1	20
ECD4059-3	10-2	20
ECD4059-3	10-3	20
ECD4059-5	10-3	20
ECD4059-5	10-4	20
ECD4060-11	9-7.1	18
ECD4060-11	9-7.2	18
ECD4060-15	9-7.1	18
ECD4061-1	3-16	10
ECD4061-1	3-22	320
ECD4064-13	6-3	29
ECD4066-1	6-3	7
ECD4066-2	6-3	8
ECD4066-3	6-3	7
ECD4066-4	6-3	8
ECD4069-1	7-9	1
ECD4072-1	10-18	23
ECD4074-1	6-9	1
ECD4074-5	6-9	1
ECD4078-1	10-4	20
ECD4078-X	10-4	20
ECD4079-1	10-18	38
ECD4079-1	10-23.1	10
ECD4080-11	6-1	91
ECD4089-11	10-35	–
ECD4089-11	3-21	230
ECD4089-11	3-22	–
ECD4089-13	3-22	–
ECD4089-15	10-35	–
ECD4089-15	3-21	260
ECD4089-23	3-18	–
ECD4089-23	3-18	–
ECD4089-23	3-21	235
ECD4089-23	3-23	280
ECD4089-25	3-21	255
ECD4089-25	3-23	290
ECD4092-1	5-1	29
ECD4093-1	10-4	27
ECD4094-1	6-6	1

PART NUMBER INDEX

Part Number	Figure	Item
ELP30-28-03	11-6	220
ELP30-2803-281	11-6	220
ELR07-2800WB-2	11-6	200
ELR17-2800WB-2	11-6	200
ES49026-8	11-1	4
ESS-64204	3-21	290
F12NE4717-054	9-15	21
F12NE-4753-02	9-14	28
F12-NE-4753-048	9-13	7
F12-NE-4753-054	9-13	17
F12NE-4753-080	8-6	8
F22NA1-02	10-12	2
F22NA1-02	10-13	11
F22NA1-62	10-28	2
F22NA17A-02	11-2	18
F22NKM62	3-4	50
FIT-221V-1/8	6-9	58
FIT-221V-3/32	10-36	–
FLX200120003208	6-1	104
FN22M-624	7-7	4
FN22M-624	8-6	4
FN22M-624	App A	–
FN-22M-624	App A	–
G06DU	9-9	16
G08DU	6-6	6
G08DU	App A	–
G2-0032	9-1	36
G-641	10-14	1
GA4-250	3-2	–
GA4-250	3-2	–
GA4-250	3-2	–
GA4-250	3-2	–
GA4-250	3-2	–
GA4-250	3-2	–
GA4-250	6-11	22
GA4-250	6-12	24
GB-910	9-13	2
GCSG 501-2	App A	–
GCSG501-2	10-18	1
GCSG501-2	App A	–
GEE62FR-C	10-19	–
GF-5500-88	5-3	21
GF-5500-88	5-4	27
HD6158510090030	App A	–
HD6158-510-090-030	10-10	4
HD6158-510-090-030	App A	–
HD6158-510-090-030H	10-10	4
HFLVV3M	6-8	9
HFLVV3M	7-3	15
HFLVV3M	App A	–
HFLVV-3M	App A	–
HFVV3M	3-6	270
HFVV3M	3-6	560
HFVV3M	3-6	710
HFVV3M	7-3	13
HFVV3M	App A	–
HFVV-3M	App A	–
HGVV3M	App A	–
HGVV-3M	App A	–
HL18PB5-2	9-8	34
HL18PB5-3	9-5	12
HL18PB70-5-5	3-8	2
HL70-5	9-5	13
HL70-5	9-8	35
HM3M	6-7	1
HM3M	6-7	10
HM3M	App A	–
HM-3M	App A	–
HML3M	6-7	5
HML3M	6-7	6
HML3M	App A	–
HML-3M	App A	–
HMLVV3M	6-6	16
HMLVV3M	6-7	5

PART NUMBER INDEX

Part Number	Figure	Item
HMLVV3M	6-7	6
HMLVV3M	App A	–
HMLVV-3M	App A	–
HMLVV4M	9-14	7
HMLVV4M	9-14	12
HMLVV4M	9-2	22
HMLVV4M	9-5	4
HMLVV4M	9-5	20
HMLVV4M	App A	–
HMLVV-4M	App A	–
HMLVV5M	9-5	–
HMLVV5M	App A	–
HMLVV-5M	App A	–
HMVV3M	6-6	5
HMVV3M	6-6	18
HMVV3M	6-7	1
HMVV3M	6-7	10
HMVV3M	6-8	4
HMVV3M	App A	–
HMVV-3M	App A	–
HMVV4M	6-8	17
HMVV4M	9-14	4
HMVV4M	9-14	9
HMVV4M	9-2	20
HMVV4M	9-5	2
HMVV4M	9-5	18
HMVV4M	App A	–
HMVV-4M	App A	–
HMVV5M	9-5	–
HMVV5M	App A	–
HMVV-5M	App A	–
HP-1003	7-9	23
HPF1260-6-58	8-6	1
▌HS-99338	3-6	–525
▌HS-99338	3-6	–645
▌HS-99338	3-6	–775
HS-99417	3-6	530
HS-99417	3-6	650
HS-99417	3-6	780
HV79-13	5-8	12
ILT1.5IM	10-36	11
ILT1M-M	10-36	10
ILT2S-M	10-24.1	–
ILT2S-M	10-24.2	–
ILT2S-M	10-36	12
IPT-20RT1-1000	App A	–
IPT-20RT1-1000-150G	10-20	2
IPT-20RT1-1000-150G	App A	–
J-3459-8	9-3	7
JC-D4N-300L	6-7.1	7
JC-D4N-300L	6-7.3	10
J-D4N-300M	10-16	–
JE-1	10-23	8
JE-1	6-1	88
K010-0406	7-8	39
K010-0406	7-8.1	35
K010406	6-9	9
K10712	7-9	–
K1AN	App A	–
K1A-N	11-5	40
K1A-N	6-5	14
K203RA	7-9	25
K94RA	7-11	11
KA1-N	App A	–
KN500B1/8	10-1	30
KN500B1/8	10-2	30
KN500B1/8	10-7	11
KN500B1/8	10-8	11
KN500B1/8	10-9	12
KN500B1/8	10-9	12
KN500B1/8	App A	–
KN500B-1/8	App A	–
KN700B1/4	11-6	210
KUP-5D55-24	10-18	33

PART NUMBER INDEX

Part Number	Figure	Item
KXD-X9N	10-18	15
L-14X	8-4	–
L-18X	8-3	6
▌L47N-600-3	9-1	28
▌L47N-600-3	9-14	60
L58D-G24-W	10-4	25
L58D-Y24-W	10-3	23
L58D-Y24-W	10-4	25
L-7X	8-4	–
LCB	10-24.1	–
LCB	10-36	–
LDF-5-157	9-2	61
LDF-5-157	9-5	28
LED-41-11-HE-39062	10-4	19
LHMS-S5-D	10-27	17
LHMS-S5-D	10-36	16
LHSSE-5	9-12	–
LR3-40-17-HE-81041	10-4	18
LR3-40-17-HE-81042	10-4	17
LR3-40-17-HE-81043	10-4	16
LW12878-4S-260	5-5	29
LW12878-4S-260	5-6	35
LWB-22-6-58	8-6	1
M1270	7-5	8
M12883/41-14	10-16	–
▌M22759/16-22-9	10-23.1	–
M25988/1-906	7-1	12
M25988/1-906	7-1.1	170
M39029/22-192	10-1	–
M39029/22-192	10-2	–
M39029/22-192	10-3	–
M39029/22-192	10-4	–
M39029/22-192	10-4	–
M39029/22-192	10-4	–
M39029/22-192	10-4	–
M39029/89-498	10-26	–
M39029/89-501	10-26	–
M39029/92-536	6-7.3	30
M45913/2-4CG5C	3-5	20
M45913/2-4CG5C	3-6.2	50
M5594/1-3	10-1	25
M81934/1-08C012	9-12	30
M83248/1-008	7-11	12
M83248/1-011	7-8	–
M83248/1-011	7-9	–
M83248/1032	App A	–
M83248/1-032	8-2	45
M83248/1-032	App A	–
M83248/1-138	6-9	36
M83248/1-911	7-8	16
M83248/1-911	7-8.1	13
M83536/10-024M	10-16	–
M83536/2-024L	10-18	33
M83536/33-003L	10-18	34
MAC-VR	10-18	11
MB542DD	9-1	3
MB542DD	9-1	3
MB542DD	9-1	3
MCI-06-01	3-17	32
MM-46-70	7-9	–
MOBIL 1 75-90	App A	–
MOBIL 1 75W-90	App A	–
MOBIL 1 LS 75W-90	App A	–
MS1042-08	6-4	7
MS1083N08	7-3	29
MS14101-6	9-1	12
MS14103-4	9-12	–
MS14104-6	9-1	12
MS15001-1	8-1	28
MS16555-27	8-3	17
MS16562-196	6-7.2	14
MS16562-211	9-3	–
MS16562-213	9-3	40
MS16562-215	8-4	2

PART NUMBER INDEX

Part Number	Figure	Item
▌ MS16562-216	3-6	100
MS16562-218	3-19	5
MS16562-222	5-8	50
MS16562-232	5-8	44
MS16562-232	5-8	85
MS16998-10L	9-4	–
MS16998-46	3-8	13
MS171527	3-17	20
MS171531	3-17	18
MS171531	3-17	35
MS171535	3-17	5
▌ MS17825-3	9-14	28
MS17825-4	9-13	7
MS17825-4	9-15	32
MS17825-5	9-13	17
MS17826-3	6-6	11
MS17826-3	6-7	14
MS17826-3	6-7	19
MS17826-3	6-8	7
MS17826-3	9-6	37
MS17826-3	9-7.1	30
MS17826-4	6-8	21
MS17826-4	9-10	5
MS17826-4	9-14	17
MS17826-4	9-2	5
MS17826-4	9-5	9
MS17826-4	9-8	24
MS17826-5	9-5	25
MS17826-6	9-1	34
MS17987C409	9-14	59
MS18066-25	3-6	90
MS18066-69	6-7	21
MS18066-69	6-7.2	18
▌ MS18066-8	3-6	090
MS18066-8	3-6	300
MS20002C4	7-3	10
MS20002C4	App A	–
MS20002-C4	App A	–
MS20002C6	3-1	120
MS20002C6	3-1	200
MS20002-C6	3-7	3
▌ MS20006H12	3-1	190
▌ MS20006H12	3-7	4
▌ MS20006H14	3-1	110
▌ MS20006H14	3-7	2
MS20073-0304	App A	–
MS20073-03-04	App A	–
MS20074-03-04	9-10	15
MS20074-05-06	8-3	53
MS20074-05-12	8-3	54
MS20074-05-16	8-3	51
MS20074-05-17	8-3	50
MS20074-05-23	8-3	48
MS20253-P2	3-13	–
MS20253-P2	3-13	–
MS20253-P2	3-13	–
MS20253-P2	3-13	–
MS20253-P2	3-2	32
MS20364-1032A	9-9	7
MS20364-428	3-16	17
▌ MS20364-428	3-22	330
MS20392-1C11	6-7.2	4
MS20392-1C9	6-7.2	4
MS20392-2C17	3-6.1	80
MS20392-2C31	6-1	84
MS20426A3-3	6-3	–
MS20426A3-3	6-3	–
MS20426A3-3	6-3	–
MS20426A3-3	6-3	–
MS20426A3-3	6-3	–
MS20426A3-3	6-11	14
MS20426A3-3	6-12	15
▌ MS20426A3-4	11-5	150
MS20426A3-4	3-13	–

PART NUMBER INDEX

Part Number	Figure	Item
MS20426A3-4	3-13	–
MS20426A3-4	3-13	–
MS20426A3-5	10-29	240
MS20426A5-4	3-19	3
MS20426AD3-2	6-9	28
MS20426AD3-3	10-12	3
MS20426AD3-3	10-12	8
▌MS20426AD3-3	10-13	34
MS20426AD3-3	10-18	–
MS20426AD3-3	10-18	5
MS20426AD3-3	10-28	3
MS20426AD3-3	11-2	19
MS20426AD3-3	3-13	25
MS20426AD3-3	3-2	–
MS20426AD3-3	3-2	–
MS20426AD3-3	3-2	–
MS20426AD3-3	3-2	–
MS20426AD3-3	5-8	3
MS20426AD3-3	5-8	29
MS20426AD3-3	5-8	70
MS20426AD3-3	6-12	–
MS20426AD3-3	6-2	6
MS20426AD3-3.5	6-12	–
MS20426AD3-4	10-28	3
MS20426AD3-4	10-29	70
MS20426AD3-4	10-29	250
MS20426AD3-4	11-5	150
MS20426AD3-4	3-19	8
MS20426AD3-4	3-2	–
MS20426AD3-4	3-2	–
MS20426AD3-4	3-2	–
MS20426AD3-4	3-2	–
MS20426AD3-4	3-2	–
▌MS20426AD3-4	3-2	–
MS20426AD3-4	3-8	24
MS20426AD3-5	3-8	18
MS20426AD3-5	3-9	14
MS20426AD3-5	6-11	19
MS20426AD3-5	6-12	21
MS20426AD3-5	9-14	32
MS20426AD3-6	10-28	4
MS20426AD3-6	3-13	34
▌MS20426AD3-6	3-2	–
▌MS20426AD3-6	3-2	–
MS20426AD3-7	3-13	32
▌MS20426AD4-4	10-13	3
MS20426AD4-4	11-4	17
MS20426AD4-4	3-2	–
MS20426AD4-8	3-6.2	40
▌MS20427M3-3	6-1.1	–
▌MS20427M3-3	6-1.1	–
▌MS20427M3-3	6-1.1	–
▌MS20427M3-3	6-1.1	–
▌MS20427M3-3	6-1.1	–
▌MS20427M3-3	6-1.1	–
▌MS20427M3-3	6-1.1	–
▌MS20427M3-3	6-1.1	–
MS20470A3-3	3-2	–
MS20470A3-3	6-1.1	120
MS20470A3-3	6-1.1	320
MS20470A3-4	10-29	190
MS20470A3-4	3-2	–
MS20470A3-4	3-2	–
MS20470A3-4	6-2	6
▌MS20470A4-4	5-2	600
MS20470AD3-3	3-13	–
MS20470AD3-3	3-13	–
MS20470AD3-3	3-13	17
▌MS20470AD3-3	4-5	–
▌MS20470AD3-3	4-5	–
▌MS20470AD3-3	4-5	–
▌MS20470AD3-3	4-5	–
▌MS20470AD3-4	8-3	–
▌MS20470AD4-2	3-2	–

PART NUMBER INDEX

Part Number	Figure	Item
MS20470AD4-3	11-2	3
MS20470AD4-3	3-19	12
MS20470AD4-3	3-5	40
MS20470AD4-4	11-2	3
MS20470AD4-4	3-2	–
MS20470AD4-4	3-2	–
MS20470AD4-4	3-6.1	340
MS20470AD4-4	5-2	600
MS20470AD4-6	3-19	6
MS20470AD5-4	9-14	66
MS20470AD5-7	3-8	2
MS20500-428	3-12	9
MS20500-524	6-1	57
MS20500-524	6-1	95
MS20604AD4W( )	3-3	20
MS20615-3M2	6-1.1	–
MS20615-3M4	10-28	13
MS20615-3M4	10-29	210
MS20813-1	4-4	–
MS20819-4D	10-33	–
MS20819-4D	6-3	62
MS20822-4D	5-8	9
MS20822-4D	6-3	57
MS20822-4D	7-9	28
MS20822-4J	7-9	11
MS20822-6D	7-8	10
MS20822-6D	7-8.1	7
MS20823-4D	5-8	51
MS20823-4D	5-8	89
MS20913-1	5-12	210
MS20995C20	5-8	–
MS20995C25	5-1	–
MS20995C25	5-1	–
MS20995C25	5-12	170
MS20995C25	9-12	–
MS20995C25	9-2	–
MS20995-C25	6-7.1	6
MS20995-C25	7-1.1	–
MS20995C32	11-2	–
MS20995C32	11-2	–
MS20995C32	3-1	100
MS20995C32	3-1	180
MS20995C32	3-7	11
MS20995C32	5-7	–
MS20995C32	6-9	57
MS20995C32	7-10	–
MS20995C32	7-8	–
MS20995C32	7-8.1	–
MS20995C32	7-9	–
MS20995-C32	App A	–
MS20995C41	7-6	–
MS20995C41	7-6.1	–
MS20995C41	7-10	–
MS21042-08	10-24.1	5
MS21042-08	3-3	18
MS21042-08	5-12	260
MS21042-08	5-12	310
MS21042-08	5-5	18
MS21042-08	5-5	51
MS21042-08	6-1	82
MS21042-08	6-1	109
MS21042-08	6-3	32
MS21042-3	10-22	15
MS21042-3	11-1	31
MS21042-3	3-14	–
MS21042-3	3-6.1	220
MS21042-3	3-6.1	250
MS21042-3	6-1	35
MS21042-3	6-1.1	420
MS21042-3	6-13	10
MS21042-3	6-14	5
MS21042-3	6-3	27
MS21042-3	9-1	22
MS21042-3	9-10	9

PART NUMBER INDEX

Part Number	Figure	Item
MS21042-3	9-2	44
MS21042-3	9-2	54
MS21042-3	9-4	9
MS21042-3	9-4	22
MS21042-3	9-8	4
MS21042-4	10-24.1	18
MS21042-4	3-12	5
MS21042-4	7-1	18
MS21042-4	9-8	11
MS21042-6	3-1	230
MS21042-6	3-1	380
MS21042-6	4-1	18
MS21043-3	7-1.1	120
MS21043-4	10-18	–
MS21043-4	6-1	19
MS21044N06	10-4	–
▌MS21044N06	4-4	13
MS21044N08	9-14	62
▌MS21044N3	10-13	27
MS21044N3	3-10	9
▌MS21044N3	3-19	16
▌MS21044N3	3-8	9
MS21044N3	3-9	11
▌MS21044N3	4-4	20
MS21044N3	4-6	14
MS21044N3	5-12	50
MS21044N3	6-10	12
▌MS21044N3	6-10	17
▌MS21044N3	6-9	42
▌MS21044N3	6-9	6
MS21044N3	7-3	22
▌MS21044N3	9-2	48
▌MS21044N3	9-2	58
▌MS21044N4	3-6	110
▌MS21044N4	3-6.1	140
MS21044N4	3-9	4
▌MS21044N4	4-1	12
▌MS21044N4	4-1	31
MS21044N4	4-2	10
▌MS21044N4	6-10	26
▌MS21044N4	6-9	39
▌MS21044N5	4-1	28
▌MS21044N5	4-1	9
MS21044N5	4-2	14
MS21044N5	4-3	8
▌MS21044N5	4-4	25
MS21044N5	7-4	28
MS21044N5	7-5	31
MS21044N5	7-6	5
MS21044N5	7-6	5
MS21044N5	7-6	5
MS21044N5	7-6.1	5
MS21044N5	8-1	16
MS21044N5	8-2	16
MS21044N6	4-3	4
MS21044N6	7-6	22
MS21044N6	7-6.1	21
▌MS21044N6	8-3	57
MS21059-08	5-8	69
▌MS21061L3	5-1	–
MS21061L3	6-3	44
▌MS21075L3N	5-1	–
▌MS21075L3N	6-9	27
MS21075L4	9-14	31
MS21078-06	3-8	23
▌MS21078-08K	4-5	–
▌MS21078-08K	4-5	–
MS21078-3	3-13	24
MS21078-3	3-2	–
MS21080-06	3-8	23
MS21080-08	11-2	18
MS21080-08K	3-2	–
MS21080-3	10-13	12
▌MS21080-3	11-2	18

PART NUMBER INDEX

Part Number	Figure	Item
MS21080-3	3-9	13
MS21081-3	3-8	17
▌MS21083N06	3-22	290
▌MS21083N08	10-33	9
▌MS21083N08	11-1	19
▌MS21083N08	11-1	39
▌MS21083N08	11-5	290
▌MS21083N08	5-2	460
▌MS21083N08	6-1	76
▌MS21083N08	6-3	56
▌MS21083N08	6-4	18
▌MS21083N08	6-4	7
▌MS21083N08	6-9	52
▌MS21083N12	8-3	40
▌MS21083N3	10-13	16
▌MS21083N3	10-13	20
▌MS21083N3	10-13	23
MS21083N3	3-12	15
MS21083N3	3-17	12
MS21083N3	3-18	47
▌MS21083N3	3-23	570
▌MS21083N3	3-8	44
▌MS21083N3	5-2	110
▌MS21083N3	5-2	150
▌MS21083N3	5-2	190
▌MS21083N3	5-2	250
▌MS21083N3	5-2	710
▌MS21083N3	5-2	770
▌MS21083N3	5-2	800
▌MS21083N3	5-2	830
MS21083N3	6-1	79
▌MS21083N3	6-10	5
▌MS21083N3	6-10	5
▌MS21083N3	6-11	26
▌MS21083N3	6-12	28
MS21083N3	7-9	6
MS21083N3	8-3	–
MS21083N5	7-5	31
MS21083N4	3-10	13
MS21083N4	3-18	26
▌MS21083N4	3-23	410
▌MS21083N4	4-1	23
▌MS21083N4	4-1	5
▌MS21083N4	4-2	24
▌MS21083N4	5-2	300
▌MS21083N5	4-4	28
▌MS21083N6	3-1	330
MS21083N6	3-17	24
▌MS21083N6	4-1	35
MS21083N6	4-2	21
▌MS21083N6	8-3	45
MS21240-08C12	9-12	30
MS21240-08C12	App A	–
MS21240-08C-12	App A	–
MS21250-06-048	7-7	1
MS21251-B3L	9-14	33
MS21251-B3S	9-14	33
MS21255-3LS	9-14	35
MS21255-3RS	9-14	34
MS21256-1	9-14	36
MS21256-2	9-14	36
MS21299C6	8-6	2
MS21428-42	9-1	3
MS21428-42	9-1	3
MS21428-44	9-4	12
MS21571-2S	10-17	17
MS21919F14	5-9	13
MS21919F4	5-11	120
MS21919WCJ12	5-5	54
▌MS21919WCJ12	6-4	27
MS21919WCJ14	10-22	4
MS21919WCJ14	5-5	14
MS21919WCJ14	6-3	53
MS21919WCJ16	10-22	5

PART NUMBER INDEX

Part Number	Figure	Item
MS21919WCJ16	5-5	15
▌MS21919WCJ16	6-4	26
MS21919WCJ18	5-5	20
▌MS21919WCJ3	6-4	20
MS21919WCJ4	5-11	120
MS21919WCJ4	6-3	52
▌MS21919WCJ6	6-1.1	134
▌MS21919WCJ6	6-4	28
MS21919WCJ8	5-5	26
MS21919WCJ8	5-5	47
MS21919WCJ8	9-2	46
MS21919WCJ8	9-2	56
MS21919WDF14	5-6	14
MS21919WDG14	6-4	27
MS21919WDG16	6-4	26
MS21919WDG3	6-4	20
MS21919WDG3	7-1.1	90
▌MS21919WDG4	11-5	310
MS21919WDG6	6-4	28
MS21919WF10	5-5	30
MS21919WF10	5-6	36
MS21919WF12	10-22	10
MS21919WF12	10-24.1	2
MS21919WF12	11-1	15
MS21919WF-12	5-12	230
MS21919WF14	10-22	10
MS21919WF14	10-24	2
MS21919WF14	5-6	20
MS21919WF14	6-9	49
MS21919WF16	10-20	4
MS21919WF16	10-22	10
MS21919WF16	10-24	8
MS21919WF16	10-24.1	3
MS21919WF16	11-1	16
MS21919WF16	5-5	15
MS21919WF16	5-6	21
MS21919WF16	6-1	27
MS21919WF-16	5-12	280
MS21919WF18	5-6	26
MS21919WF18	6-9	48
MS21919WF-18	5-12	290
MS21919WF4	11-1	28
MS21919WF4	5-10	6
MS21919WF4	5-5	39
MS21919WF4	5-6	32
MS21919WF8	10-20	3
MS21919WF8	10-22	10
MS21919WF8	10-24	3
MS21919WF8	10-24.1	14
MS21919WF8	11-1	22
MS21919WF8	9-2	46
MS21919WF8	9-2	56
MS2191WCJ8	6-1	106
MS24523-21	10-1	26
MS24524-31	10-9	1
MS24524-31	10-9	1
MS24525-31	10-1	21
MS24525-31	10-2	21
MS24525-31	10-3	21
MS24525-31	10-4	21
MS24566-2B	9-14	39
MS24665-1010	6-7.2	6
MS24665-1013	6-3	65
MS24665-1013	9-13	8
▌MS24665-1013	9-14	18
MS24665-1013	9-15	33
MS24665-105	6-8	8
MS24665-151	10-33	4
MS24665-151	11-5	200
MS24665-151	3-2	–
MS24665-151	5-9	7
MS24665-151	6-1	86
▌MS24665-151	6-8	25
MS24665-151	9-13	27

PART NUMBER INDEX

Part Number	Figure	Item
MS24665-151	9-15	22
MS24665-151	9-8	25
▌MS24665-152	3-6.1	90
MS24665-153	5-9	7
MS24665-153	6-6	12
MS24665-153	6-7	15
MS24665-153	6-7	20
MS24665-153	9-11	10
MS24665-153	9-2	6
MS24665-153	9-5	10
MS24665-153	9-6	38
MS24665-153	9-7.1	31
▌MS24665-155	9-15	14
▌MS24665-300	9-1	35
▌MS24665-300	9-12	28
▌MS24665-300	9-14	43
MS24665-302	5-8	61
▌MS24665-302	9-12	34
MS24665-323	9-14	54
MS24665-357	9-14	67
MS24665-389	9-14	67
MS24665-88	6-8	8
MS24677-49	8-3	53
MS24677-52	8-3	49
MS24677-52	8-3	54
MS246935287FLTH	8-3	–
MS24693BB52	App A	–
MS24693-BB52	10-1	–
MS24693-BB52	10-1	–
MS24693-BB52	10-1	–
MS24693-BB52	10-1	–
MS24693-BB52	10-1	–
MS24693-BB52	10-1	–
MS24693-BB52	10-2	–
MS24693-BB52	10-2	–
MS24693-BB52	10-2	–
MS24693-BB52	10-2	–
MS24693-BB52	10-2	–
MS24693-BB52	10-2	–
MS24693-BB52	10-2	–
MS24693-BB52	10-2	–
MS24693-BB52	10-3	–
MS24693-BB52	10-3	–
MS24693-BB52	10-3	–
MS24693-BB52	10-3	–
MS24693-BB52	10-3	–
MS24693-BB52	10-3	–
MS24693-BB52	10-3	–
MS24693-BB52	10-3	–
MS24693-BB52	10-4	–
MS24693-BB52	10-4	–
MS24693-BB52	10-4	–
MS24693-BB52	10-4	–
MS24693-BB52	10-4	–
MS24693-BB52	10-4	–
MS24693-BB52	10-4	–
MS24693-BB52	App A	–
MS24693S24	App A	–
MS24693-S24	10-36	2
MS24693-S24	10-37	20
MS24693-S24	10-4	24
▌MS24693-S24	3-8	29
MS24693-S24	App A	–
▌MS24693-S27	3-22	310
▌MS24693-S27	3-8	28
▌MS24693-S272	3-19	14

PART NUMBER INDEX

Part Number	Figure	Item
▌ MS24693-S273	3-6.1	270
MS24693S275	App A	–
MS24693-S275	10-17	31
MS24693-S275	App A	–
MS24693-S287	8-3	–
MS24693-S294	5-1	9A
▌ MS24693-S48	6-5	5
▌ MS24693-S48	6-5	6
▌ MS24693-S49	4-5	19
MS24693-S50	9-7.1	8
MS24693-S50	9-7.1	10
MS24693-S50	9-7.2	8
MS24693-S50	9-7.2	10
▌ MS24693-S51	3-2	–
MS24694-47	3-6	490
MS24694-51	3-21	–
MS24694-51	3-6	250
MS24694-51	3-6	440
MS24694-51	3-6	520
MS24694-51	3-6	900
▌ MS24694-S11	6-5	16
▌ MS24694-S13	11-1	46
MS24694-S301	5-2	290
▌ MS24694-S49	10-13	18
▌ MS24694-S52	3-6.1	230
▌ MS24694S51	5-1	–
MS24694S51	App A	–
MS24694-S51	3-15	11
▌ MS24694-S51	3-6	250
▌ MS24694-S51	3-6	900
MS24694-S51	App A	–
MS24694S54	App A	–
MS24694-S54	10-12	10
MS24694-S54	10-13	14
MS24694-S54	App A	–
MS24694S55	App A	–
MS24694-S55	10-16	5
MS24694-S55	App A	–
MS24694S56	App A	–
MS24694-S56	10-16	15
MS24694-S56	5-2	90
MS24694-S56	App A	–
MS24694S58	App A	–
MS24694-S58	3-15	10
MS24694-S58	5-2	755
MS24694-S58	10-13	14
MS24694-S58	App A	–
▌ MS24694-S7	11-5	110
▌ MS24694-S7	6-5	12
MS24694S94	App A	–
MS24694-S94	5-1	9
MS24694-S94	App A	–
MS24694S95	App A	–
MS24694-S95	5-4	21
MS24694-S95	App A	–
MS25182-2	10-12	21
MS25182-2	10-13	31
MS25182-2	10-15	4
MS25226-6-4	10-18	–
MS26574-1	10-16	18
MS26574-1	10-16	19
MS26574-10	10-2	28
MS26574-10	10-5	4
MS26574-10	10-6	4
MS26574-2	10-16	18
MS26574-2	10-16	18
MS26574-2	10-5	1
MS26574-2	10-6	1
MS26574-3	10-5	2
MS26574-3	10-6	2
MS26574-5	10-16	19
MS26574-5	10-5	3
MS26574-5	10-6	3
MS27039-0806	10-18	39

PART NUMBER INDEX

Part Number	Figure	Item
MS27039-0806	10-23.1	20
MS27039-0806	6-2	8
MS27039-0807	6-2	3
▌MS27039-0807	6-8	22
▌MS27039-0808	11-5	300
MS27039-0808	3-2	22
▌MS27039-1-06	6-3	6
MS27039-1-07	10-17	24
MS27039-1-07	6-2	8
▌MS27039-1-07	6-3	3
▌MS27039-1-07	6-3	9
▌MS27039-1-07	6-3	9
MS27039-1-08	10-17	2
MS27039-1-08	11-6	20
▌MS27039-1-08	3-19	10
MS27039-1-08	3-2	24
MS27039-1-08	3-21	–
MS27039-1-08	3-6.1	200
MS27039-1-08	5-11	260
MS27039-1-08	5-8	22
MS27039-1-08	5-8	54
MS27039-1-08	5-8	90
MS27039-1-08	6-11	6
MS27039-1-08	6-12	6
MS27039-1-09	10-16	13
MS27039-1-09	10-16	21
MS27039-1-09	10-33	14
MS27039-1-09	3-17	13
MS27039-1-09	3-6.1	270
MS27039-1-09	5-2	780
MS27039-1-09	5-2	810
▌MS27039-1-10	6-3	2
▌MS27039-1-10	6-3	37
▌MS27039-1-10	6-3	39
MS27039-1-11	10-16	2
MS27039-1-11	10-16	9
MS27039-1-11	10-17	10
MS27039-1-11	10-18	24
MS27039-1-11	3-12	12
MS27039-1-11	3-17	14
MS27039-1-11	5-2	690
▌MS27039-1-12	6-3	42
MS27039-1-14	6-11	8
MS27039-1-14	6-12	8
MS27039-1-16	3-15	7
MS27039-1-16	5-2	750
MS27039-1-17	3-14	–
MS27212-3-4	10-18	–
MS27473E14B15S	10-4	–
MS27473E14B15SB	10-4	–
MS27473E14B18S	10-26	–
MS27473E14B18SA	10-4	–
MS27473E16B99S	10-4	–
MS27473E16B99SA	10-4	–
MS27473E16B99SB	10-4	–
MS27473E16B99SC	10-4	–
MS27488-16	10-4	–
MS27488-16	10-4	–
MS27488-16	10-4	–
MS27488-16	10-4	–
MS27488-16	10-4	–
MS27488-20	10-26	–
MS27488-20	10-4	–
MS27488-20	10-4	–
MS27488-20	10-4	–
MS27488-20	10-4	–
MS27488-20	10-4	–
MS27488-20	10-4	–
MS27488-20	10-4	–
MS27506B14-2	10-26	–
MS27506B14-2	10-4	–
MS27506B14-2	10-4	–
MS27506B14-2	10-4	–
MS27506B16-2	10-4	–

PART NUMBER INDEX

Part Number	Figure	Item
MS27506B16-2	10-4	–
MS27506B16-2	10-4	–
MS27506B16-2	10-4	–
MS27641-6	9-1	12
MS27641-6	9-1	12
MS27641-6	9-1	12
MS27718-22-1	9-6	27
MS27718-22-1	9-7.1	12
MS27718-22-1	9-7.2	12
MS28034-3	6-9	7
MS28042-1A	10-1	–
MS28042-1A	10-1	–
MS28042-1A	10-1	–
MS28042-1A	10-1	–
MS28042-1A	10-1	–
MS28042-1A	10-2	–
MS28042-1A	10-2	–
MS28042-1A	10-2	–
MS28042-1A	10-2	–
MS28042-1A	10-2	–
MS28042-1A	10-2	–
MS28042-1A	10-2	–
MS28042-1A	10-2	–
MS28042-1A	10-26	–
MS28042-1A	10-3	–
MS28042-1A	10-3	–
MS28042-1A	10-3	–
MS28042-1A	10-3	–
MS28042-1A	10-3	–
MS28042-1A	10-3	–
MS28042-1A	10-3	–
MS28042-1A	10-4	–
MS28042-1A	10-4	–
MS28042-1A	10-4	–
MS28042-1A	10-4	–
MS28042-1A	10-4	–
MS28042-1A	10-4	–
MS28042-1A	10-4	–
MS28042-2A	10-2	–
MS28042-2A	10-2	–
MS28042-2A	10-2	–
MS28042-2A	10-3	–
MS28042-2A	10-3	–
MS28042-2A	10-3	–
MS28042-2A	10-4	–
MS28775-008	7-11	12
MS28775-013	7-9	–
MS28775-014	5-8	20
MS28775-015	4-4	30
MS28775-018	7-11	4
MS28775-020	5-8	10
MS28775-024	8-2	21
MS28775-029	7-9	21
MS28775-111	9-15	37
MS28775-113	5-8	11
MS28775-113	7-11	8
MS28775-131	4-4	15
MS28775-218	4-4	5
MS28775-233	5-1	32
MS28778-10	6-1	6
MS28778-10	6-9	20
MS28778-10	7-8	–
MS28778-10	7-8.1	–
MS28778-12	5-12	340
MS28778-12	5-7	13
MS28778-12	6-1	44
MS28778-12	6-9	16
MS28778-12	6-9	22
MS28778-2	7-11	6
MS28778-3	7-11	2
MS28778-3	7-8	33

PART NUMBER INDEX

Part Number	Figure	Item
MS28778-4	6-9	8
MS28778-4	6-9	25
MS28778-4	7-8	23
MS28778-4	7-8	33
MS28778-4	7-8.1	20
MS28778-4	7-8.1	30
MS28778-4	7-9	13
MS28778-6	6-4	–
MS28778-6	6-9	14
MS28778-6	7-9	27
MS28778-8	6-1	2
MS28778-8	6-1	4
MS28778-8	6-1	12
MS28778-8	6-9	12
MS28778-8	6-9	18
MS28778-8	7-8	16
MS28778-8	7-8.1	13
MS28778-8	7-9	–
MS28889-2	4-4	29
MS29512-04	5-12	–
MS29512-4	6-1	26
MS29513-010	5-8	53
MS29513-012	5-7	2
MS29513-017	5-7	8
MS29513-020	5-8	35
MS29513-020	5-8	76
MS29513-110	5-7	2
MS29513-116	5-7	6
MS29561-226	6-9	–
MS29561-232	5-1	–
MS3106F12-10S	10-1	–
MS3106F12-10S	10-2	–
MS3106F12-10S	10-3	–
MS3106F12-10S	10-3	–
MS3106F12-10SW	10-1	–
MS3106F12-10SW	10-2	–
MS3106F12-10SW	10-3	–
MS3115-10A	10-12	7
MS3115-10A	10-13	4
MS3116F8-33S	10-27	16
MS3126F10-6S	10-12	23
MS3126F10-6S	10-13	33
MS3126F10-6S	10-15	3
MS3126F10-6S	10-2	–
MS3126F10-6S	10-2	–
MS3126F10-6S	10-3	–
MS3126F12-10S	10-1	–
MS3126F12-10S	10-18	40
MS3126F12-10S	10-2	–
MS3126F12-10S	10-2	–
MS3126F12-10S	10-2	–
MS3126F12-10S	10-2	–
▌ MS3126F12-10S	10-23.1	–
MS3126F12-10S	10-3	–
MS3126F12-10S	10-3	–
MS3126F12-10S	10-4	–
MS3126F14-15S	10-25	9
MS3126F14-15S	10-26	10
▌ MS3187A20	10-23.1	–
MS33737-16C	10-3	–
MS33737-16C	10-3	–
MS33737-16C	10-4	–
MS33737-16C	10-4	–
MS3417-14C	10-22	3
MS3420-4	5-12	180
MS3456KT14S-5S	10-22	2
MS3476L20-16S	10-18	–
MS35206-203	11-4	3
MS35206-211	9-3	–
MS35206-225	9-6	18
MS35206-225	9-6	32
MS35206-225	9-7	18
MS35206-225	9-7	26
MS35206-225	9-7.1	24

PART NUMBER INDEX

Part Number	Figure	Item
MS35206-225	9-7.2	24
MS35206-227	10-4	–
MS35206-228	11-6	150
▌MS35206-230	11-5	210
▌MS35206-230	3-22	210
▌MS35206-232	11-5	250
▌MS35206-243	11-1	42
▌MS35206-243	6-1.1	–
MS35206-244	10-30	2
▌MS35206-244	11-1	37
▌MS35206-244	11-2	10
▌MS35206-244	11-2	26
MS35206-244	5-5	48
MS35206-244	9-7.1	23
MS35206-244	9-7.2	23
▌MS35206-245	11-1	17
MS35206-245	3-2	–
MS35206-245	3-2	–
MS35206-245	3-2	–
MS35206-245	5-11	200
MS35206-245	5-8	88
MS35206-245	6-1	81
MS35206-245	6-1	108
MS35206-245	6-12	9
MS35206-245	6-3	54
▌MS35206-245	6-4	19
▌MS35206-245	6-4	5
▌MS35206-246	10-24.1	4
▌MS35206-246	3-2	–
▌MS35206-246	3-2	–
▌MS35206-246	3-2	–
MS35206-246	3-2	–
MS35206-246	5-11	30
MS35206-246	5-12	250
MS35206-246	5-5	16
MS35206-246	5-5	52
▌MS35206-246	6-3	30
▌MS35206-246	6-4	14
MS35206-247	5-12	300
▌MS35206-247	6-1	29
MS35206-248	7-3	27
MS35206-321	10-23	11
MS35206-325	6-8	15
MS35207-225	10-33	17
MS35207-245	6-1	63
MS35207-263	10-19	3
MS35207-263	10-23	5
MS35207-263	10-25	8
MS35207-263	10-26	9
MS35207-263	6-12	6
MS35207-265	5-4	28
MS35214-15	9-7.1	19
MS35214-15	9-7.2	19
MS35214-15	10-4	–
MS35214-40	10-4	40
MS35214-41	10-4	36
MS35214-44	10-26	14
MS35215-58	10-1	–
MS35215-58	10-1	–
MS35215-58	10-1	–
MS35215-58	10-1	–
MS35215-58	10-1	–
MS35215-58	10-1	–
MS35215-58	10-2	–
MS35215-58	10-2	–
MS35215-58	10-2	–
MS35215-58	10-2	–
MS35215-58	10-2	–
MS35215-58	10-2	–
MS35215-58	10-2	–
MS35215-58	10-2	–
MS35215-58	10-2	–
MS35215-58	10-2	–

PART NUMBER INDEX

Part Number	Figure	Item
MS35215-58	10-2	–
MS35215-58	10-26	13
MS35215-58	10-3	–
MS35215-58	10-3	–
MS35215-58	10-3	–
MS35215-58	10-3	–
MS35215-58	10-3	–
MS35215-58	10-3	–
MS35215-58	10-3	–
MS35215-58	10-3	–
MS35215-58	10-3	–
MS35215-58	10-3	–
MS35215-58	10-3	–
MS35215-58	10-4	–
MS35215-58	10-4	–
MS35215-58	10-4	–
MS35215-58	10-4	–
MS35215-58	10-4	–
MS35215-58	10-4	–
MS35215-58	10-4	–
MS35215-58	10-4	–
MS35265-15	7-9	–
MS35333-40	10-33	–
MS35333-40	10-38	50
▌MS35333-40	11-1	25
▌MS35333-40	11-3	–
▌MS35333-40	11-5	260
▌MS35333-40	3-2	–
▌MS35333-40	3-2	–
▌MS35333-40	4-5	15
MS35333-40	5-5	53
▌MS35333-41	10-33	–
MS35333-42	3-6.2	–
MS35333-44	5-9	9
MS35333-75	6-4	11
MS35338-136	10-33	–
MS35338-139	10-17	7
MS35338-244	5-5	50
MS35338-41	10-24.1	10
MS35338-42	10-38	90
MS35338-42	5-11	40
MS35338-42	5-11	90
MS35338-42	5-11	140
▌MS35338-42	6-1	32
MS35338-42	6-1	74
▌MS35338-42	6-1.1	–
MS35338-99	10-4	38
MS35489-10	3-2	–
MS35489-10	3-2	–
MS35489-10	3-2	–
MS35489-10	5-12	140
MS35489-14	3-2	–
MS35489-14	3-2	–
MS35489-14	5-5	11
MS35489-14	5-5	36
MS35489-14	5-6	17
MS35489-14	7-7	7
MS35489-15	7-7	6
MS35489-17	3-2	–
MS35489-17	3-2	–
▌MS35489-18	10-13	30
MS35489-20	3-2	–
MS35489-20	3-8	35
MS35489-20	5-5	37
MS35489-20	5-6	43
MS35489-4	10-24.2	7
MS35489-6	10-21	3
MS35489-7	5-6	42
MS35489-7	7-7	7
MS35490-1	10-4	42
MS35649-2314	6-4	12
MS35649-262	10-24.1	8
MS35649-282	10-24.1	5
MS35649-282	10-38	100

PART NUMBER INDEX

Part Number	Figure	Item
MS35649-282	5-11	60
MS35649-282	5-11	110
MS35649-282	5-11	160
▌MS35649-282	6-1	31
MS35649-282	6-1	82
▌MS35649-282	6-1.1	–
▌MS35649-282	6-4	15
MS35649-282	9-12	39
MS35649-286	10-4	39
MS35769-11	7-8	4
MS35769-11	7-9	24
MS35769-6	7-8	6
MS35769-6	7-8.1	3
MS35769-9	7-11	10
MS35842-13	7-9	–
MS51521B8S	11-1	5
MS51521B8S	6-1	–
MS51525-6-4	7-9	11
MS51525B3S	7-1.1	220
MS51525B4S	7-8	24
MS51525B4S	7-8.1	21
MS51525B4S	7-9	16
MS51527A65	6-4	38
MS51527A6S	6-4	1
MS51527A-6S	6-3	10
MS51527B3S	7-1.1	240
MS51527B4S	7-9	16
▌MS51861-14	11-5	190
▌MS51861-24	4-2	–
▌MS51861-35	4-2	–
▌MS51862-14	3-22	270
▌MS51862-14	6-1.1	400
MS51922-1	3-5	20
MS51922-1	3-6.2	50
MS51957-26	10-36	5
MS51957-26	10-37	40
MS51957-26	11-6	–
MS51957-26	11-6	–
MS51957-26	11-6	–
MS51958-26	10-33	17
MS5198-26	10-33	14
MS9101-03	6-1	28
▌MS9101-03	6-1.1	136
MS9135-01	6-1	55
MS995C32	App A	–
MTP5S-E6-C	5-12	240
MTP-J-F	10-25	–
MTP-J-F	10-25	–
MTP-J-F	10-26	–
MTP-J-F	10-26	–
MTP-J-M	10-25	10
MTP-J-M	10-26	11
N5000-175-PP	7-11	20
N5000-187-S-PP	7-10	8
N5000-187-S-PP	7-2	8
N5000-187-S-PP	7-2	8
N5000-206-PP	7-11	15
N5000-62-PP	9-3	6
N5000-87-PP	9-3	14
N5002-100	8-7	10
N5002-125-PP	9-11	4
N5002-268-PP	9-15	10
N5002-354-S-PP	7-6	13
N5002-354-S-PP	7-6.1	12
N500-268-S-PP	7-1	30
N5100-118	6-10	7
N5100-137-S-PP	7-1	7
N5100-137-S-PP	7-1.1	18
N5100-78-S-PP	7-1	21
N5100-98-S-PP	7-2	9
N5100-98-S-PP	7-2	9
N5108-56-PP	9-3	20
NAJ1-02BC	3-13	24
NAJ1-02BC	3-2	–

PART NUMBER INDEX

Part Number	Figure	Item
NAJ1-62	3-8	23
NAJ1-82	5-8	2
NAJ1-82	5-8	28
NAJ1-82	5-8	69
NAJ1-82	6-12	–
NAJ1-82-BC	10-28	17
NAS 6203-17H	9-10	7
NAS1024N08K	4-5	–
NAS1024N08K	4-5	–
NAS1033A3	10-13	5
NAS1068-4	9-14	31
NAS1068A3	10-18	4
NAS1068A3	3-2	26
NAS1068A3	5-2	480
NAS1068A3	5-2	520
NAS1068A3	6-3	43
NAS1068A3	6-3	48
NAS1068-A3	5-8	24
NAS1068-A3	5-8	56
NAS1068-A3	5-8	92
NAS1068-A3	6-9	27
NAS1068A4	10-18	–
NAS1096-2-10	5-8	5
NAS1096-2-10	5-8	31
NAS1096-2-10	5-8	72
NAS1096-2-8	5-8	72
NAS1097AD3-3	6-9	28
NAS1097AD3-4	11-2	19
NAS1097AD3-5	3-18	–
NAS1101-08-6	6-11	5
NAS1101-08-6	6-12	5
NAS1103-11	3-17	8
NAS1104-9D	9-2	7
NAS1149BN832H	10-4	37
NAS1149C0332R	6-1	80
NAS1149C0332R	6-6	23
NAS1149C0332R	6-8	6
NAS1149C0363R	3-4	140
NAS1149C0363R	3-4	200
NAS1149C0363R	6-8	24
NAS1149C0432R	3-18	34
NAS1149C0432R	3-23	490
NAS1149C0432R	6-1	20
NAS1149C0432R	6-8	20
NAS1149C0432R	7-1	17
NAS1149C0432R	9-15	36
NAS1149C0463R	5-1	–
NAS1149C0463R	9-15	36
NAS1149C0463R	9-15	40
NAS1149C0563R	6-1	56
NAS1149C0563R	7-5	29
NAS1149C0632R	3-17	27
NAS1149C0632R	3-17	33
NAS1149C1290R	8-3	39
NAS1149D0316H	10-33	–
NAS1149D0316H	3-2	–
NAS1149D0316H	3-2	25
NAS1149D0316H	3-21	–
NAS1149D0316H	3-9	10A
NAS1149D0316H	6-8	18
NAS1149D0316H	9-4	21
NAS1149D0316H	9-4	7
NAS1149D0316J	3-17	9
NAS1149D0316J	3-6.1	210
NAS1149D0316J	3-6.1	240
NAS1149D0316J	3-8	22
NAS1149D0363H	10-33	–
NAS1149D0363H	10-33	–
NAS1149D0363H	11-2	16
NAS1149D0363H	11-2	31
NAS1149D0363H	6-8	18
NAS1149D0363H	6-9	30
NAS1149D0363H	9-1	21
NAS1149D0363J	10-13	15

PART NUMBER INDEX

Part Number	Figure	Item
NAS1149D0363J	6-1.1	415
NAS1149D0363J	7-3	3
NAS1149D0416H	11-5	220
NAS1149D0416H	5-1	5
NAS1149D0416H	9-14	15
NAS1149D0416H	9-2	4
NAS1149D0463H	11-5	16
NAS1149D0463H	11-5	230
NAS1149D0463H	6-9	38
NAS1149D0463H	9-14	15
NAS1149D0463H	9-14	16
NAS1149D0463H	9-2	8
NAS1149D0463J	3-16	12
NAS1149D0463J	3-22	–
NAS1149D0463J	7-6	17
NAS1149D0463J	7-6.1	16
NAS1149D0563H	8-1	3
NAS1149D0563H	8-2	3
NAS1149D0563H	8-3	52
NAS1149D0616H	9-1	33
NAS1149D0663H	8-3	44
NAS1149D0663H	9-1	32
NAS1149DN816H	10-33	8
NAS1149DN816J	7-3	28
NAS1149DN816J	8-1	18
NAS1149DN816J	8-2	18
NAS1149DN832H	3-2	23
NAS1149DN832H	8-3	36
NAS1149DN832H	8-3	4
NAS1149F0332P	10-13	19
NAS1149F0332P	10-22	14
NAS1149F0332P	11-1	30
NAS1149F0332P	3-12	13
NAS1149F0332P	3-19	15
NAS1149F0332P	3-8	8
NAS1149F0332P	3-9	10
NAS1149F0332P	4-2	28
NAS1149F0332P	4-4	19
NAS1149F0332P	5-2	100
NAS1149F0332P	5-2	140
NAS1149F0332P	5-2	180
NAS1149F0332P	5-2	240
NAS1149F0332P	5-5	57
NAS1149F0332P	6-10	10
NAS1149F0332P	6-10	14
NAS1149F0332P	6-10	16
NAS1149F0332P	6-10	20
NAS1149F0332P	6-11	25
NAS1149F0332P	6-11	7
NAS1149F0332P	6-12	7
NAS1149F0332P	6-6	10
NAS1149F0332P	6-9	4
NAS1149F0332P	6-9	32
NAS1149F0332P	7-1.1	110
NAS1149F0332P	7-3	18
NAS1149F0332P	7-9	5
NAS1149F0332P	8-3	31
NAS1149F0332P	9-12	37
NAS1149F0332P	9-14	26
NAS1149F0332P	9-14	41
NAS1149F0332P	9-15	5
NAS1149F0332P	9-2	43
NAS1149F0332P	9-2	53
NAS1149F0332P	9-4	31
NAS1149F0332P	9-7.1	29
NAS1149F0363P	10-13	22
NAS1149F0363P	10-13	26
NAS1149F0363P	3-10	7
NAS1149F0363P	3-12	14
NAS1149F0363P	3-18	23
NAS1149F0363P	3-18	46
NAS1149F0363P	3-23	430
NAS1149F0363P	3-8	16
NAS1149F0363P	4-6	13

PART NUMBER INDEX

Part Number	Figure	Item
NAS1149F0363P	5-12	40
▌NAS1149F0363P	5-2	700
▌NAS1149F0363P	5-2	760
▌NAS1149F0363P	5-2	790
▌NAS1149F0363P	5-2	820
NAS1149F0363P	5-8	91
NAS1149F0363P	6-1	36
NAS1149F0363P	6-1	85
▌NAS1149F0363P	6-10	16
▌NAS1149F0363P	6-10	4
▌NAS1149F0363P	6-10	4
NAS1149F0363P	6-1.1	430
▌NAS1149F0363P	6-2	9
▌NAS1149F0363P	6-9	4
NAS1149F0363P	7-3	34
NAS1149F0363P	7-9	5
▌NAS1149F0363P	8-3	30
▌NAS1149F0363P	9-14	41A
▌NAS1149F0363P	9-14	46
NAS1149F0432P	3-8	4
NAS1149F0432P	3-8	12
NAS1149F0432P	3-10	11
NAS1149F0432P	3-12	4
NAS1149F0432P	3-16	16
▌NAS1149F0432P	3-22	250
▌NAS1149F0432P	3-6.1	130
NAS1149F0432P	3-9	3
▌NAS1149F0432P	4-1	11
▌NAS1149F0432P	4-1	30
NAS1149F0432P	4-2	9
NAS1149F0432P	5-1	35
▌NAS1149F0432P	5-2	310
NAS1149F0432P	6-1	20
▌NAS1149F0432P	6-10	24
NAS1149F0432P	7-8.2	75
▌NAS1149F0432P	9-12	16
NAS1149F0432P	9-13	6
▌NAS1149F0432P	9-15	29
▌NAS1149F0432P	9-2	2
NAS1149F0463P	3-8	4
NAS1149F0463P	3-18	32
NAS1149F0463P	3-18	42
▌NAS1149F0463P	3-23	370
▌NAS1149F0463P	4-1	22
▌NAS1149F0463P	4-1	4
NAS1149F0463P	4-2	11
NAS1149F0463P	4-6	3
NAS1149F0463P	5-12	90
▌NAS1149F0463P	6-10	24
NAS1149F0463P	8-5	16
NAS1149F0463P	9-13	25
▌NAS1149F0463P	9-15	31
NAS1149F0532P	4-3	7
▌NAS1149F0532P	4-4	23
NAS1149F0532P	4-3	9
NAS1149F0532P	6-1	92
NAS1149F0532P	6-1	94
NAS1149F0532P	7-2	12
NAS1149F0532P	8-1	6
NAS1149F0532P	8-2	6
NAS1149F0532P	9-13	26
▌NAS1149F0532P	9-15	20
NAS1149F0563	9-13	21
NAS1149F0563P	3-10	19
▌NAS1149F0563P	4-1	27
▌NAS1149F0563P	4-1	8
NAS1149F0563P	4-2	13
NAS1149F0563P	4-2	18
NAS1149F0563P	4-6	6
NAS1149F0563P	6-1	94
NAS1149F0563P	6-1	102
NAS1149F0563P	7-6	4
NAS1149F0563P	7-6	4
NAS1149F0563P	7-6	4

PART NUMBER INDEX

Part Number	Figure	Item
NAS1149F0563P	7-6.1	4
NAS1149F0563P	8-1	6
NAS1149F0563P	8-2	6
NAS1149F0632P	4-3	5
NAS1149F0632P	9-12	21
NAS1149F0663P	3-1	220
NAS1149F0663P	3-1	320
NAS1149F0663P	3-1	350
NAS1149F0663P	3-1	370
NAS1149F0663P	3-1	400
NAS1149F0663P	3-18	5
NAS1149F0663P	3-18	14
NAS1149F0663P	3-23	100
NAS1149F0663P	4-1	14
NAS1149F0663P	4-2	20
NAS1149F0663P	4-3	3
NAS1149F0663P	7-6	21
NAS1149F0663P	7-6.1	20
NAS1149F0663P	9-12	26
NAS1149F0732P	9-11	8
NAS1149F0763P	5-2	420
NAS1149F0863P	6-1	39
NAS1149F0963P	6-3	15
NAS1149F0963P	6-4	32
NAS1149FN316P	3-2	–
NAS1149FN616P	10-24.1	9
NAS1149FN616P	10-4	–
NAS1149FN616P	3-22	280
NAS1149FN632P	4-4	12
NAS1149FN816P	10-24.1	6
NAS1149FN816P	10-38	80
NAS1149FN816P	11-1	18
NAS1149FN816P	11-5	280
NAS1149FN816P	3-2	–
NAS1149FN816P	3-2	–
NAS1149FN816P	3-2	–
NAS1149FN816P	3-2	–
NAS1149FN816P	3-2	–
NAS1149FN816P	3-2	–
NAS1149FN816P	5-2	450
NAS1149FN816P	5-5	17
NAS1149FN816P	5-5	49
NAS1149FN816P	5-8	74
NAS1149FN816P	6-1	33
NAS1149FN816P	6-1.1	–
NAS1149FN816P	6-1.1	240
NAS1149FN816P	6-12	10
NAS1149FN816P	6-3	55
NAS1149FN816P	6-4	16
NAS1149FN816P	6-4	6
NAS1149FN816P	6-9	51
NAS1149FN816P	9-14	64
NAS1149FN832P	11-1	38
NAS1149FN832P	11-2	13
NAS1149FN832P	11-2	29
NAS1149FN832P	5-11	50
NAS1149FN832P	5-11	100
NAS1149FN832P	5-11	150
NAS1149FN832P	5-12	320
NAS1149FN832P	6-1	75
NAS1149FN832P	6-1	110
NAS1149FN832P	6-2	9
NAS1149FN832P	6-3	31
NAS1149FN832P	6-4	17
NAS1149FN832P	8-1	33
NAS1149FN832P	8-2	38
NAS1204-40D	9-2	13
NAS1306-8	3-1	210
NAS1351-3H32	7-9	22
NAS1351-4-20P	3-8	13
NAS1351C3H8	10-18	2
NAS1351C3H8	10-19	–
NAS1352-08H6	5-8	79
NAS144DH-10	7-3	8

PART NUMBER INDEX

Part Number	Figure	Item
NAS144DH-12	7-3	9
NAS146DH-22	3-1	190
NAS146DH-22	3-7	4
NAS146DH-24	3-1	110
NAS146DH-24	3-7	2
NAS1474-A3	6-3	45
NAS1474-A3	6-3	47
NAS1523-4E	7-8.2	60
NAS1611-025	8-5	4
NAS1611-025	8-5	11
NAS1611-029	8-3	14
NAS1611-133	8-3	15
NAS1611-137	8-5	15
NAS1612-10	8-5	24
NAS1612-2	7-5	9
NAS1612-2	8-5	25
NAS1612-2	App A	–
NAS1612-2A	7-1	14
NAS1612-2A	7-5	9
NAS1612-2A	8-2	33
NAS1612-2A	8-5	25
NAS1612-2A	App A	–
NAS1612-8	7-5	6
NAS1612-8	App A	–
NAS1612-8A	7-5	6
NAS1612-8A	App A	–
▌NAS1833-08-500	10-23.1	30
NAS1833-3-500	5-2	120
NAS1833-3-500	5-2	210
NAS1833-3-500	5-2	280
NAS1833-3-500	5-2	370
NAS1834A3-500	5-2	730
NAS1834A3K500	5-3	735
NAS1922-0100-3	5-5	4
NAS1922-0150-3	4-5	–
NAS1922-0150-3	4-5	–
NAS1922-0150-3	4-5	–
NAS1922-0150-3	4-5	–
NAS1922-0150-3	4-5	–
▌NAS1922-0175-3	4-5	–
▌NAS1922-0175-3	4-5	–
▌NAS1922-0175-3	4-5	–
▌NAS1922-0175-3	4-5	–
▌NAS1922-0175-3	4-5	–
▌NAS1922-0175-3	4-5	–
NAS1922-0225-3	5-5	10
NAS1922-0275-3	7-1.1	60
NAS1922-0350-3	6-2	11
NAS1922-0700-3	6-3	20
NAS1922-0925-3	6-3	21
NAS1922-100-3	6-1	47
NAS428K4-10	9-14	29
▌NAS428K4A10	9-14	29
NAS509-12	6-1	103
NAS509-12	7-4	23
NAS509-12	7-5	26
NAS509-8	8-5	19
NAS559-3	8-5	18
NAS617-2	10-26	–
NAS617-3	6-1	10
NAS617-5	6-1	8
NAS620-10	6-12	27
NAS620-10	6-9	32
NAS6203-10D	6-6	21
NAS6203-13D	6-7	16
NAS6203-14D	6-6	9
NAS6203-14D	6-7	11
NAS6203-14D	9-7.1	28
NAS6203-2	9-1	20
NAS6203-27	9-8	1
NAS6203-38	9-8	12
NAS6203-6	9-2	42
NAS6203-6	9-2	52

PART NUMBER INDEX

Part Number	Figure	Item
NAS6203-6	9-4	6
NAS6203-7D	6-8	5
NAS6203-8D	6-8	23
NAS6203-9D	6-6	13
NAS6203-9D	9-6	39
NAS6203-9D	9-7.1	32
NAS6204-11D	6-8	19
NAS6204-11D	9-2	1
NAS6204-11D	9-2	59
NAS6204-11D	9-8	22
NAS6204-12D	9-5	6
NAS6204-14D	9-2	38
NAS6204-16D	9-14	20
NAS6204-16D	9-2	30
NAS6204-21D	9-2	10
NAS6204-22	3-16	13
NAS6204-26D	9-14	19
NAS6204-26D	9-2	31
NAS6204-46D	9-5	16
NAS6204-5	3-16	11
NAS6204-5	3-22	–
NAS6204-9	3-12	3
NAS6204-9D	9-14	14
NAS6205-12D	9-5	23
NAS6205-4H	6-1	101
NAS6206-23D	9-1	30
NAS6206-24D	9-1	30
NAS6206-32D	9-12	20
NAS6206-58	3-1	390
NAS6206-58	4-1	13
NAS620-6L	9-4	–
NAS626-58	8-6	1
NAS6603-1	10-13	21
NAS6603-1	6-3	33
NAS6603-1	9-2	47
NAS6603-1	9-2	57
NAS6603-10	6-1.1	410
NAS6603-12	10-13	25
NAS6603-12	4-4	18
NAS6603-12	6-10	19B
NAS6603-12	9-4	30
NAS6603-14	8-3	29
NAS6603-2	3-8	15
NAS6603-4	3-23	560
NAS6603-4	4-2	26
NAS6603-4	6-10	19A
NAS6603-4	6-3	23
NAS6603-4	6-9	33
NAS6603-4	7-9	7
NAS6603-6	6-9	3
NAS6603-6	7-9	4
NAS6603-8	6-10	13
NAS6603-8	6-9	29
NAS6603-8	7-9	4
NAS66032	3-23	440
NAS66032	6-11	24
NAS66032	6-12	26
NAS66032	6-9	3
NAS66032	6-9	31
NAS66032	9-4	32
NAS6603D14	9-14	25
NAS6603D4	6-10	9
NAS6603D4	9-14	45
NAS6603D6	9-14	40
NAS6603H2	9-12	36
NAS6604-13	3-16	9
NAS6604-13	3-22	240
NAS6604-17	3-22	350
NAS6604-17	4-1	10
NAS6604-17	4-1	29
NAS6604-23	3-12	7
NAS6604-23	3-16	13
NAS6604-23	3-23	510
NAS6604-25	3-12	7

PART NUMBER INDEX

Part Number	Figure	Item
NAS6604-27	6-9	37
NAS6604-29	6-9	41
NAS6604-3	3-23	450
NAS6604-48	4-2	8
NAS6604-5	3-23	520
NAS6604-50	4-1	24
NAS6604-50	4-1	3
NAS6604-56	4-1	21
NAS6604-56	4-2	22
NAS6604-7	6-10	23
NAS6604-9	3-23	390
NAS6604-9	3-8	3
NAS6604D15	9-15	28
NAS6604D15	9-15	38
NAS6604H1	9-12	17
NAS6604H19	8-5	28
NAS6604H2	5-1	31
NAS6604H9	8-5	17
NAS6605-15	6-1	93
NAS6605-19	4-2	12
NAS6605-21	4-4	24
NAS6605-52	4-1	26
NAS6605-52	4-1	7
NAS6605-56	4-1	33
NAS6606-29	4-2	19
NAS6606-8	3-1	210
NAS686A06K	10-28	2
NAS686A06K	10-29	60
NAS686A06K	10-29	260
NAS686A08K	10-28	17
NAS686A08K	3-2	–
NAS686A08K	3-2	–
NAS686A08K	6-12	–
NAS686A08K	6-2	5
NAS686A3K	3-13	24
NAS686-A08K	6-1.1	–
NAS73-3E108	3-10	8
NAS73-4E002	9-14	24
NAS73-4E003	9-2	3
NAS73-4E004	9-14	27
NAS73-4E004	9-5	7
NAS73-5E003	9-5	26
NAS75-4-006	9-2	60
NAS75-6-010	4-1	16
NAS77-6-012	4-1	15
NAS77A6–007	3-10	3
NK500-8-5	9-3	30
NK-500-8R5	8-1	17
NK-500-8R5	8-2	48
NK500-8R6	App A	–
NK-500-8R6	5-8	16
NK-500-8R6	8-1	17
NK-500-8R6	8-3	35
NK-500-8R6	App A	–
NK500-8R8	App A	–
NK-500-8R8	8-2	17
NK-500-8R8	App A	–
NK-510-10R10	8-1	27
NK-510-10R10	8-2	31
NP500-8R6	App A	–
NP-500-8R6	App A	–
NP500-8R8	8-3	3
NP500-8R8	App A	–
NP-500-8R8	App A	–
NP5-4A	3-10	5
NP5-6A	3-10	5
NPN	3-6.2	60
NPN	5-9	6
NPS24694S5	9-6	13
NPS24694S5	9-6	16
NPS24694S5	9-7	13
NPS24694S5	9-7	16
NPS24694S5	9-7.1	2
NPS24694S5	9-7.2	2

PART NUMBER INDEX

Part Number	Figure	Item
P1-112	9-1	–
P1-90254	9-7.1	15
P1-90254	9-7.2	15
▌P261P-S1AS3CB1K	10-8	10
▌P261P-S1AS3CB1K	10-9	11
P4-900054	9-6	28
P4-900054	9-7.1	13
P4-900054	9-7.2	13
PACMO-APZ21N	10-4	28
PACMO-APZ21N	10-4	28
PAI700	10-1	13
PAI700	10-2	13
PAI700	10-3	13
PAI700	10-4	13
PCS111A	App A	–
PCS-111A	10-24	1
PCS-111A	10-24.1	1
PCS-111A	10-24.2	3
PCS-111A	App A	–
PGZF0A0180	8-5	9
PK 86XZ-8-8	6-1	22
PLB2S-CO	7-8	40
PLB2S-CO	7-8.1	36
PLB3S-CO	9-7.1	35
PLB3S-CO	9-7.2	28
PLT.7M-MO	10-24.2	9
▌PLT1M-C71	6-1.1	145
▌PLT2S	9-2	–
PLT2S-CO	10-24.2	11
PLT4S-CO	11-4	11
PLT4S-CO	11-5	320
PR1425B1/2	3-3	19
PR1425B1/2	3-3	23
PR1425B1/2	3-3	25
PR1425B2	3-3	–
PR1440B1/2QT	5-2	30
PR1440B2	5-2	30
PR1440B2	5-7	–
PWMS-H25-C	10-27	7
QS200-M10S	5-3	23
QS200-M10S	5-6	7
QS200-M12S	5-4	26
QS200-M24S	10-23	13
QS200-M28S	5-3	–
QS200-M32S	5-6	12
RST-200	8-3	12
RV8-4416	10-10	7
S10P175	10-33	15
S25P280	3-6.2	80
S4-200	App A	–
S500-12	10-24.1	2
S500-12	5-12	230
S500-12	6-4	4
S500-14	6-4	27
S500-16	10-24.1	3
S500-16	5-12	280
S500-18	5-12	290
S500-3	6-1	107
S500-6	6-4	28
S500-8	10-24.1	14
S500-8	6-1	106
S500-8	6-4	3
S-6424EC-1	11-3	1
S6P150	11-5	270
S83BZ-2	7-1	11
S83BZ-2	7-1.1	180
S83BZ-2	7-11	9
S8P150	10-38	40
S8P150	11-3	4
S8P150	3-2	–
S8P150	3-2	–
S8P150	3-2	–
S8P150	3-2	–
S8P150	3-3	22

PART NUMBER INDEX

Part Number	Figure	Item
S8P150	5-5	18A
S8P-150	11-1	24
S8P-150	4-5	14
S8P-270	3-6.1	160
S-9213EC-2	11-1	1
S-9216EC-1	6-1	11
S-9230EC-1	11-1	3
▌S-9704EC-1	11-3	2
SC628ANP	10-10	–
SC628ANP	App A	–
SC628ANPR	10-10	–
SC628ANPR	App A	–
SC628D	10-10	2
SC628DR	10-10	2
SC628W	10-10	3
SC628W	App A	–
SC628WR	10-10	3
SC628WR	App A	–
▌SCAT12	6-2	10
SCEET12	6-2	10
SD15F10JVL0	10-1	–
SD15F10JVL0	10-2	–
SD15F10JVL0	10-3	–
SD15F10JVL0	10-3	–
SD15F10JVL0	10-4	–
SD15M10JVL0	10-1	–
SD15M10JVL0	10-2	–
SD15M10JVL0	10-3	–
SD15M10JVL0	10-3	–
SD15M10JVL0	10-4	–
SE25PFR-MR0	6-7.3	50
SF96-20	App A	–
SF96-20-PT	App A	–
SJ-3526	10-35	–
SJ-3526	7-7	9
SJ-3527	10-35	–
SJ-3527	7-7	8
SK3500	10-18	18
SL61N5F	8-7	16
SL61N5P	8-7	16
SL61N5P	App A	–
SL61N-5P	App A	–
SL61W5P	8-7	17
SL61W5P	App A	–
SL61W-5P	App A	–
SM21919F8	5-5	6
SO-0163-9033	6-7.1	8
SO-0163-9033	6-7.3	20
SPDD2315	6-1	24
SPDD2405	10-27	13
SPDD2415	10-27	13
SS-094-0625	8-4	2
SS-200-1-2SBT	10-26	6
SS-44F	10-27	18
SS-44F	10-36	17
SSR-0075-S17	9-6	19
SST1.5I-M	10-24.2	6
SST1.5IMP	10-36	–
SST1.5I-MP	10-15	–
SST1.5I-MP	10-24.2	6
SST1.5I-MP	10-25	3
SST1.5I-MP	10-26	3
SST1.5I-MP	10-33	11
SST1.5I-MP	10-33	20
SST1.5I-MP	10-39	70
SST1.5I-MP	6-9	10
SST1M-MP	5-5	13
SST1M-MP	10-24	9
SST1M-MP	10-24.1	–
SST1M-MP	10-24.2	2
SST1M-MP	10-25	5
SST1M-MP	10-26	5
SST1M-MP	10-27	8
SST1M-MP	10-36	–

PART NUMBER INDEX

Part Number	Figure	Item
SST1M-MP	6-7.3	60
SST2S-MP	10-24.1	–
SST2S-MP	10-24.2	–
SST2S-MP	10-33	11
SST2S-MP	10-33	20
SST2S-MP	10-36	–
SST2S-MP	10-39	80
SST2S-MP	5-6	19
SW44	11-6	130
T14BH517BC	10-10	5
T2-0055	9-6	29
T2-0055	9-7	23
T2-0055	9-7.1	16
T2-0055	9-7.2	16
T3-120-1	10-28	9
T3-120-1	10-29	130
T4-0198	9-1	–
TF3056FR	5-2	860
TS-023	9-15	8
TS-023	9-15	15
TSP-1728	10-14	11
U2-025	9-1	–
V3-1	9-3	33
VC1019	6-1	50
VC-3	11-6	190
VH-175-S02	9-1	4
VH-218	7-1	6
VH-218	7-1.1	19
VH-225-S02	9-4	13
VH-325	7-4	4
VH-325	7-5	12
VH-337	7-1	15
VH-375	7-8	28
VH-375	7-8.1	25
VH-400	7-4	7
VH-400	7-5	4
VH-75	8-3	33
VH-87-S02	9-1	13
VH-87-S02	9-1	13
VH-87-S02	9-1	13
VI-P4T-K2	5-8	47
VI-P6T-K2	5-8	40
VI-P6T-K2	5-8	81
VR1528-11B	10-18	1
VR1528-11B	10-19	1
VTB11350	9-11	–
W-09	8-1	21
W-09	8-2	25
W-09	8-4	5
W1283	10-31	5
W1283	App A	–
W1284G	App A	–
W1284-G	10-31	6
W1284-G	App A	–
W1284R	App A	–
W1284-R	10-31	6
W1284-R	App A	–
W129028	App A	–
W1290-28	10-31	2
W1290-28	App A	–
W389CX-13	10-18	34
W-47	9-15	11
W97CSX-2	10-18	15
W97CSX-2	App A	–
WC-22-6	8-6	2
WC400-00	4-2	25
Weld-On 45	10-33	–
WP-22-6	8-6	3
X109HT	3-6.1	10
X1333HT	11-5	170
X1333HT	3-6.1	40
X-142	8-3	–
X-142	8-3	–
Y9485	4-5	24

PART NUMBER INDEX

Part Number	Figure	Item	Part Number	Figure	Item
Y9485	6-5	–			
Z1200J-02	6-1	–			
ZFD10940732	App A	–			
ZFD-1094-0-7-32	9-1	37			
ZFD-1094-0-7-32	App A	–			

PART NUMBER INDEX

Part Number	Figure	Item	Part Number	Figure	Item

INTENTIONALLY LEFT BLANK

SECTION 3 – TABLE OF CONTENTS

	Cover	3-1
	Table of Contents	3-1.2
3-1	Structural Assembly	3-2
3-2	Cowling and Access Panels	3-8
3-3	Windshield and Window Installation	3-16
3-4	Sliding Window Installation	3-22
3-5	Engine Cowl Door Opener	3-24
3-6	Cabin Door Assembly	3-25.1
3-6.1	Cabin Door Installation	3-25.7
3-6.2	Cabin Door Opener	3-26
3-7	Tailcone Installation	3-30
3-8	Horizontal and Vertical Stabilizer Installation	3-32
3-9	Tail Rotor Guard and Extension Tube Installation	3-36
3-10	Tail Rotor Guard Installation (4172000-101)	3-38
3-11	Tail Rotor Guard Installation (4172000-9)	3-40
3-12	Tailcone Vibration Absorber Installation	3-42
3-13	Tail Rotor Drive Shaft Cover Installation	3-46
3-14	Seat Installation - TH-28	3-52
3-15	Seat Installation - 480/480B	3-54
3-16	Seat Assembly	3-56
3-17	Seat Base Assembly	3-58
3-18	Bench Seat Installation	3-62
3-19	Passenger Footrest Installation	3-70
3-20	Exterior Markings	3-72
3-21	Interiors	3-76
3-22	Pilot and Co-Pilot Seat Assembly	3-81
3-23	Cushion Collection and Armrest Assembly	3-85

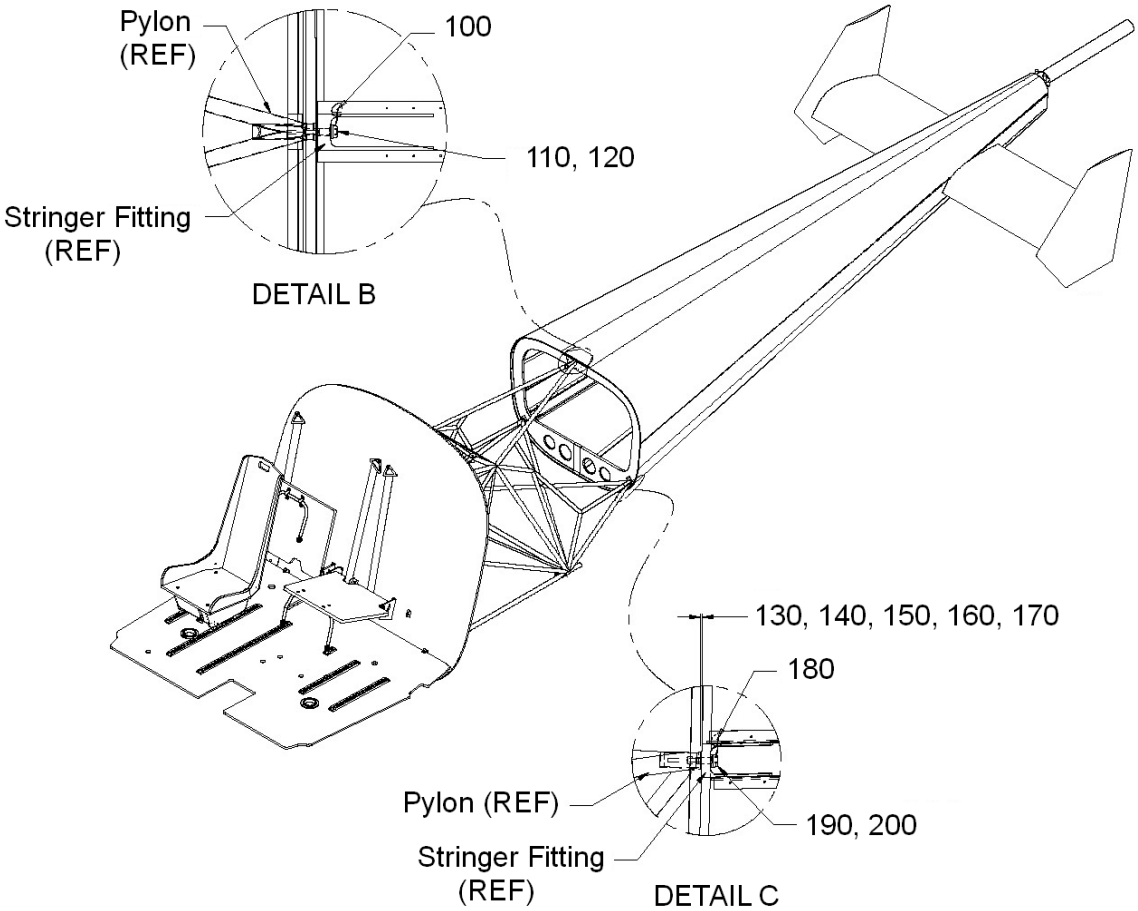

Sheet 1 of 3

FIGURE 3-1. STRUCTURAL ASSEMBLY

FIGURE 3-1. STRUCTURAL ASSEMBLY

ITEM NUMBER	PART NUMBER	DESCRIPTION	QTY PER ASSY	EFFECTIVITY		
				TH-28	480	480B
–	4101501-3	Structural Assembly Complete	REF		X	X
10	4114023-901	. Cabin Installation	1	X	X	X
20	4119760-903	. Forward Seat Installation Copilot	1		X	X
30	4114030-3	. Closure Installation	1		X	X
40	4174000-9	. Fairing Installation	1	X	X	X
50	4174000-7	. . Skid Gear Installation	2		X	X
60	4174018-1	. . Landing Gear Fairing Installation	2	X	X	X
70	4119760-905	. Forward Seat Installation Pilot	1		X	X
80	4119775-103	. Bench Seat Installation	1		X	X
90	4119759-3	. Floor Track Installation	1		X	X
100	MS20995C32	. Safety Wire	A/R		X	X
110	MS20006H14	. Bolt	1		X	X
110	NAS146DH-24	. Bolt (Superseded by MS20006H14)	1		X	X
120	MS20002C6	. Washer	1		X	X
130	4112025-11	. Shim Tailcone	A/R		X	X
140	4112025-13	. Shim Tailcone	A/R		X	X
150	4112025-15	. Shim Tailcone	A/R		X	X
160	4112025-17	. Shim Tailcone	A/R		X	X
170	4112025-19	. Shim Tailcone	A/R		X	X
180	MS20995C32	. Safety Wire	A/R		X	X
190	MS20006H12	. Bolt	2		X	X
190	NAS146DH-22	. Bolt (Superseded by MS20006H12)	2		X	X
200	MS20002C6	. Washer	2		X	X
210	NAS6606-8	. Bolt	4		X	X
210	NAS1306-8	. Bolt (Superseded by NAS6606-8)	4		X	X
220	NAS1149F0663P	. Washer	12		X	X
220	AN960-616	. Washer (Alternate)	12		X	X
230	MS21042-6	. Nut	6		X	X
240	4119350-902	. Cowl Installation	1	X	X	X
250	4118310-905	. Door Installation L/H	1		X	X
–	4118310-906	. Door Installation R/H	1		X	X
260	4182127-5	. Instrument Console Installation	1		X	X
270	4114020-1	. Floor Installation	1		X	X
280	4122061-5	. Fuel Bladder Structure Installation	1			X
290	4114018-1	. Cabin Bulkhead Installation	1	X	X	X
300	4110040-201	. Pylon Structure, 480B	1		X	X
310	4112000-903	. Tailcone Structure	1		X	X

FIGURE 3-1. STRUCTURAL ASSEMBLY

ITEM NUMBER	PART NUMBER	DESCRIPTION	QTY PER ASSY	EFFECTIVITY		
				TH-28	480	480B
320	NAS1149F0663P	. Washer	12			X
320	AN960-616	. Washer (Alternate)	12			X
330	MS21083N6	. Nut	2			X
330	AN364-624A	. Nut (Superseded by MS21083N6)	2			X
340	28-17150-1	. Bolt Attach Frame Gear Landing	2			X
350	NAS1149F0663P	. Washer	12			X
350	AN960-616	. Washer (Alternate)	12			X
360	4118850-900	. Keel Assembly	1			X
370	NAS1149F0663P	. Washer	12			X
370	AN960-616	. Washer (Alternate)	12			X
380	MS21042-6	. Nut	6			X
390	NAS6206-58	. Bolt	2			X
400	NAS1149F0663P	. Washer	12			X
400	AN960-616	. Washer (Alternate)	12			X
–	9080221	. Lubricant, Spray	A/R			X
–	9080331	. Anti-Seize Thread Compound	A/R			X
–	9080443	. Lubricant, Film, Solid	A/R			X

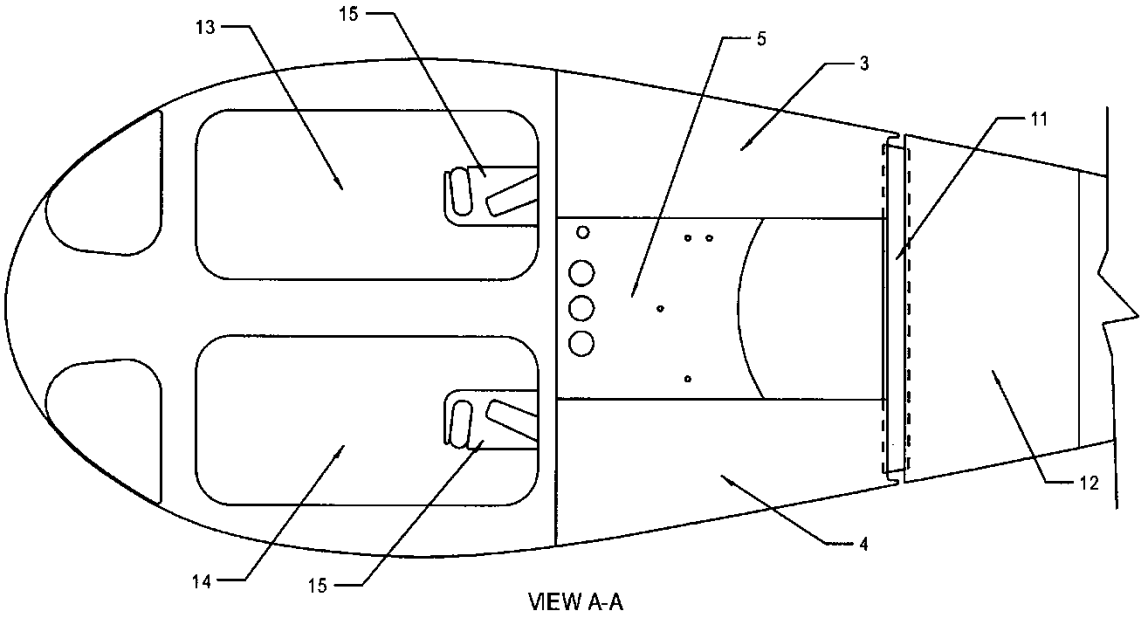

VIEW A-A

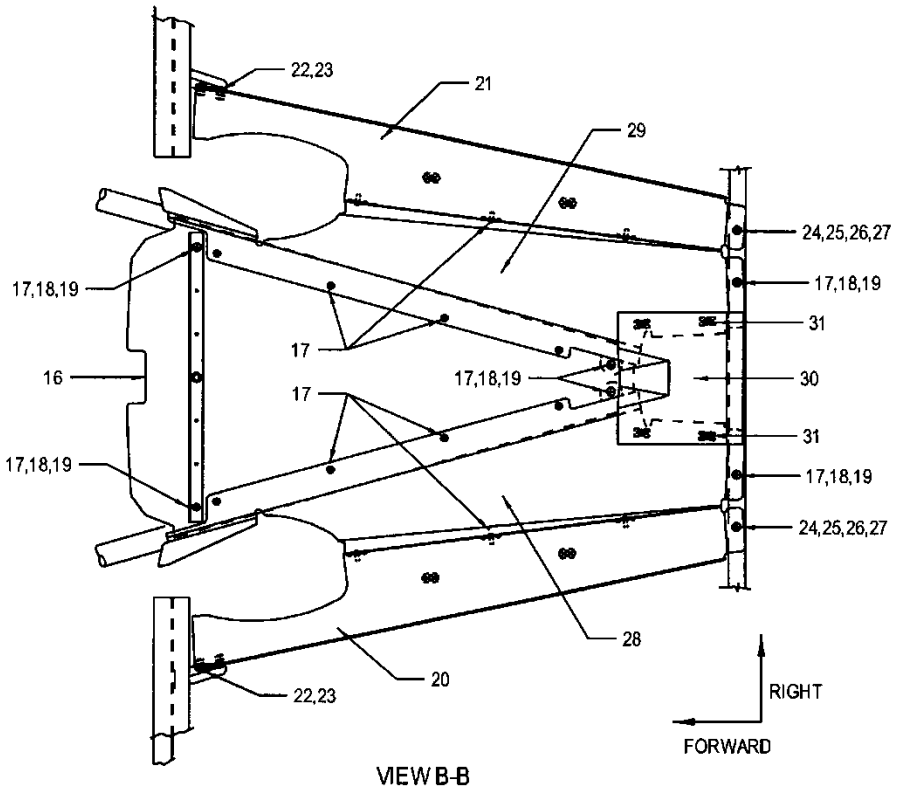

VIEW B-B

Sheet 2 of 2

FIGURE 3-2. COWLING AND ACCESS PANELS

FIGURE 3-2. COWLING AND ACCESS PANELS

ITEM NUMBER	PART NUMBER	DESCRIPTION	QTY PER ASSY	EFFECTIVITY		
				TH-28	480	480B
–	4220150-1	Cowl Door Installation, L/H	REF			X
–∞	4119334-1	Cowl Door installation, L/H (Superseded by 4220150-1)	REF		X	X
1♦♦	4220150-5	. Cowling Door Assembly, L/H	1			X
1**	4220150-3	. Cowling Door, L/H (Superseded by 4220150-5)	1			X
–±	4119334-23	. Cowl Door L/H Hinge Assembly	1			X
1	4119334-3	. Cowling Door, L/H (Superseded by 4220150-5)	1	X	X	X
–	85-12-140-16	. Wing Stud Fastener	3	X	X	X
–♦	85-12-140-20	. Wing Stud Fastener (Acceptable Alternate)	3	X	X	X
–	85-46-101-39	. Washer, Nylon	3	X	X	X
–	85-34-101-20	. Split Ring	3	X	X	X
–	4220150-2	Cowl Door Installation, R/H	REF			X
–∞	4119334-2	Cowl Door Installation, R/H (Superseded by 4220150-2)	REF		X	X
2♦♦	4220150-6	. Cowl Door Assembly, R/H	1			X
2**	4220150-4	. Cowling Door, R/H (Superseded by 4220150-6)	1			X
–	4119334-24	. Cowl Door R/H Hinge Assembly	1			X
2	4119334-4	. Cowl Door Assembly, R/H (Superseded by 4220150-6)	1	X	X	X
–	85-12-140-16	. Wing Stud Fastener	3			X
–♦	85-12-140-20	. Wing Stud Fastener (Acceptable Alternate)	3			X
–	85-46-101-39	. Washer, Nylon	3			X
–	85-34-101-20	. Split Ring	3			X
–	4119329-1	Lower Cowl Forward Installation	REF	X	X	X
3●	4119356-3	. Quarter Panel Cowling, L/H	1			X
3†	4119329-3	. Quarter Panel Cowling, L/H (Alternate to 4119356-3)	1	X	X	X
–††	MS35489-14	. Grommet	1			X
–††	MS35489-17	. Grommet	3			X
–††	MS35489-20	. Grommet	1			X
–††	MS35489-10	. Grommet	2	X	X	X
–††	AN931-5-12	. Grommet (Superseded by MS35489-10)	2	X	X	X
–	85-35-295-15	. Spring Leaf Receptacle	3	X	X	X
–	MS20426AD3-6	. Rivet	6	X	X	X
–●	S8P150	. PlusNut	4			X
–	A06195-8Z-1D	. Nut, Tinnerman (Superseded by S8P150)	4	X	X	X

FIGURE 3-2. COWLING AND ACCESS PANELS

ITEM NUMBER	PART NUMBER	DESCRIPTION	QTY PER ASSY	EFFECTIVITY		
				TH-28	480	480B
–●	MS35206-246	. Screw	4			X
–●	AN515-8R10	. Screw (Superseded by MS35206-246)	4			X
–●	NAS1149FN816P	. Washer	4			X
–●	AN960-8L	. Washer (Alternate)	4			X
–●	4119328-13	. Bracket Attach LH Quarter Panel	1			X
–●	4119328-15	. Bracket Attach LH Quarter Panel	1			X
4●	4119356-4	. Quarter Panel Cowling, R/H	1			X
4†	4119329-4	. Quarter Panel Cowling, R/H (Superseded by 4119356-4)	1	X	X	X
–●	MS35489-14	. Grommet	1			X
–●	MS35489-17	. Grommet	2			X
–	85-35-295-15	. Spring Leaf Receptacle	3	X	X	X
–	MS20426AD3-6	. Rivet	6	X	X	X
–●	S8P150	. PlusNut	4			X
–	A06195-8Z-1D	. Nut, Tinnerman (Superseded by S8P150)	4	X	X	X
–	MS35333-40	. Lock Washer	4		X	X
–●	MS35206-246	. Screw	4			X
–●	AN515-8R10	. Screw (Superseded by MS35206-246)	4			X
–●	NAS1149FN816P	. Washer	4			X
–●	AN960-8L	. Washer (Alternate)	4			X
–●	4119328-14	. Bracket Attach RH Quarter Panel	1			X
–●	4119328-16	. Bracket Attach RH Quarter Panel	1			X
5	4119329-5	. Panel Cowling, Lower Center (Replaced by 4119327-3)	1	X	X	X
–	S8P150	. PlusNut, Flathead, 8-32 X 0.656"	10	X	X	X
–	A06195-8Z-1D	. Nut, Tinnerman (Superseded By S8P150)	10	X	X	X
–	MS20426AD3-3	. Rivet, Solid, 3/32" X 3/16"	20	X	X	X
–	MS35489-10	. Grommet, Rubber, .312" (.750")	4	X	X	X
–	MS35206-246	. Screw, Machine (Rh), 8-32 X 0.625"	2		X	X
–	4119327-1	. Skin Assembly	1		X	X
–	4119327-13	. Doubler	1		X	X
–	4119327-14	. Doubler	1		X	X
–	4119355-11	. Stiffener Lower Cowl	1		X	X
5‡	4119327-3	. Panel Cowling, Lower Center	1			X
–●	S8P150	. PlusNut	11			X
–	A06195-8Z-1D	. Nut, Tinnerman (Superseded by S8P150)	8			X

FIGURE 3-2. COWLING AND ACCESS PANELS

ITEM NUMBER	PART NUMBER	DESCRIPTION	QTY PER ASSY	EFFECTIVITY		
				TH-28	480	480B
–	MS35333-40	. Lock Washer	11		X	X
–●	MS35206-246	. Screw	11			X
–●	AN515-8R10	. Screw (Superseded by MS35206-246)	11			X
–●	NAS1149FN816P	. Washer	11			X
–●	AN960-8L	. Washer (Alternate)	11			X
–●	MS35489-10	. Grommet	1			X
–	AN931-5-12	. Grommet (Superseded by MS35489-10)	1			X
–●	8X1/2	. Screw	8			X
–	4516-1	. Vinyl Foam Tape	A/R			X
–	4119344-3	Cowl Installation, L/H	REF		X	X
6	4119344-901	. Panel Assembly, Oil Cooler Inlet	1	X	X	X
–	AJ4-35	. Dzus Fastener	5	X	X	X
–	GA4-250	. Fastener Collar	8	X	X	X
7	4119366-1	. Baggage Door Assembly (Used with 4119344-905)	1	X	X	X
7	4119358-3	. Baggage Door Assembly (Used with 4119344-903)	1	X	X	X
–	AN393-9	. Pin	2	X	X	X
–	NAS1149D0316H	. Washer	2	X	X	X
–	AN960D10L	. Washer (Alternate)	2	X	X	X
–	MS24665-151	. Cotter Pin	2	X	X	X
8	4119344-905	. Quarter Panel, Top Left (Used with 4119358-5)	1	X	X	X
– ‡‡	4119351-19	. Hand Hold, Cowl	1		X	X
– ‡‡	4119351-13	. Hand Hold, Cowl (Superseded by 4119351-19)	1		X	X
– ≡	1219-4200-Z3Y	. Spring, Stud Fastener	2	X	X	X
– ≡Δ	MS20426AD3-4	. Rivet	4	X	X	X
–	AJ4-35	. Dzus Fastener,1/4 Turn	2	X	X	X
–	GA4-250	. Fastener Collar	2	X	X	X
–	82-19-160-16	. Stud	1	X	X	X
–	82-46-101-39	. Washer, Nylon	1	X	X	X
–	82-32-101-20	. Retainer, Ring, Split	1	X	X	X
8	4119344-903	. Quarter Panel, Top Left (Used with 4119366-1)	1	X	X	X
– ‡‡	4119351-19	. Hand Hold, Cowl	1		X	X
– ‡‡	4119351-13	. Hand Hold, Cowl (Superseded by 4119351-19)	1		X	X

FIGURE 3-2. COWLING AND ACCESS PANELS

ITEM NUMBER	PART NUMBER	DESCRIPTION	QTY PER ASSY	EFFECTIVITY		
				TH-28	480	480B
– ≡	1219-4200-Z3Y	. Spring, Stud Fastener	2	X	X	X
– ≡Δ	MS20426AD3-4	. Rivet	4	X	X	X
–	AJ4-35	. Dzus Fastener,1/4 Turn	2	X	X	X
–	GA4-250	. Fastener Collar	2	X	X	X
–	82-19-160-16	. Stud	1	X	X	X
–	82-46-101-39	. Washer, Nylon	1	X	X	X
–	82-32-101-20	. Retainer, Ring, Split	1	X	X	X
–	MS35206-245	. Screw	2	X	X	X
–	NAS1149FN816P	. Washer	2	X	X	X
–	AN960-8L	. Washer (Superseded by NAS1149FN816P)	2	X	X	X
9*	4119357-902	. Step Cowl Assembly	1	X	X	X
–	AJ4-30	. Dzus Fastener	2	X	X	X
–	AJ4-35	. Dzus Fastener	13	X	X	X
–	AJ4-40	. Dzus Fastener	4	X	X	X
–	GA4-250	. Fastener Collar	19	X	X	X
–	4119319-3	. Step Door Assembly (Upper)	1	X	X	X
–	4119319-7	. Step Door Assembly (Lower)	1	X	X	X
–	MS20470AD4-4	. Rivet	12	X	X	X
–	4119343-11	. Louver	3	X	X	X
–	4119343-13	. Louver	1	X	X	X
– ●●	MS20470A3-4	. Rivet	20	X	X	X
–	MS20470A3-3	. Rivet (Superseded by MS20470A3-4)	20	X	X	X
–	4119345-3	Cowl Installation R/H Side	REF			X
9‡	4119357-1	. Step Cowl Assembly	1			X
–	AJ4-35	. Dzus Fastener	18			X
–	AJ4-40	. Dzus Fastener	3			X
–	GA4-250	. Fastener Collar	21			X
–	4119319-3	. Step Door Assembly (Upper)	1			X
–	4119319-13	. . Door Panel - Top	1			X
–	4119319-5	. . Hinge Assembly	1			X
–	4119345-5	. . Hinge Assembly (Superseded by 4119319-5)	1			X
–	4119319-15	. . Hinge Leaf	1			X
–	4119345-15	. . . Hinge	1			X
–	4119319-21	. . . Spring	2			X
–	28-12319-1	. . . Spring (Superseded by 4119319-21)	2			X
–	5451	. . Teflon Tape	A/R			X

FIGURE 3-2. COWLING AND ACCESS PANELS

ITEM NUMBER	PART NUMBER	DESCRIPTION	QTY PER ASSY	EFFECTIVITY		
				TH-28	480	480B
–	MS20426AD4-4	. . Rivet	6			X
–	4119319-19	. Shim	2			X
–	4119319-7	. Step Door Assembly (Lower)	1			X
–	4119319-17	. . Door - Lower	1			X
–	4119319-5	. . Hinge Assembly	1			X
–	4119345-5	. . Hinge Assembly (Superseded by 4119319-5)	1			X
–	4119319-15	. . . Hinge Leaf	1			X
–	4119345-15	. . . Hinge Leaf (Superseded by 4119319-15)	1			X
–	4119319-21	. . . Spring	2			X
–	28-12319-1	. . . Spring (Superseded by 4119319-21)	2			X
–	5451	. . Teflon Tape	A/R			X
–	4119357-13	. . Bezel	1			X
–	MS20470A3-4	. . Rivet	14			X
–	NAS1149FN316P	. . Washer	A/R			X
10	4119345-902	. Quarter Panel, Top Right	1	X	X	X
– ‡‡	4119351-19	. . Hand Hold, Cowl	1		X	X
– ‡‡	4119351-13	. . Hand Hold, Cowl (Superseded by 4119351-19)	1		X	X
–	1219-4200-Z3Y	. . Spring, Stud Fastener	5	X	X	X
– Δ	MS20426AD3-4	. . Rivet	10	X	X	X
–●●	AJ4-35	. . Dzus Fastener, 1/4 Turn	2	X	X	X
–	GA4-250	. . Fastener Collar	2	X	X	X
–	82-19-160-16	. . Stud Fastener, Recessed	1	X	X	X
–	82-46-101-39	. . Washer, Nylon	1	X	X	X
–	82-32-101-20	. . Retainer, Ring, Split	1	X	X	X
–	MS35206-245	. . Screw	2	X	X	X
–●●	NAS1149FN816P	. . Washer	2	X	X	X
–	AN960-8L	. . Washer (Superseded by NAS1149FN816P)	2	X	X	X
11	280-114508-11	. Cowl Support	1	X	X	X
–	A06195-8Z-1D	. . Nut, Tinnerman	17	X	X	X
–	MS21078-3	. . Nut Plate	2	X	X	X
–	NAJ1-02BC	. . Nut Plate (Superseded by MS21078-3)	2	X	X	X
–	MS20426AD3-3	. . Rivet	38	X	X	X
12†	4119348-911	. Cowl Assembly Lower	1	X	X	X
12†	4119348-901	. Cowl Assembly, Lower (Superseded by 4119348-911)	1	X	X	X

FIGURE 3-2. COWLING AND ACCESS PANELS

ITEM NUMBER	PART NUMBER	DESCRIPTION	QTY PER ASSY	EFFECTIVITY		
				TH-28	480	480B
–▼	4119368-919	. . Cowl Skin Lower Aft	1	X	X	X
–	1219-4200-Z3Y	. . Spring, Stud Fastener	8	X	X	X
– Δ	MS20426AD3-4	. . Rivet	16	X	X	X
–	4119352-13	. . Clip	1	X	X	X
–	4119352-15	. . Clip	1	X	X	X
–	4119352-16	. . Clip	1	X	X	X
–	MS20470AD4-4	. . Rivet	9	X	X	X
–	4508-75	. . Foam Tape	A/R	X	X	X
–	4516-75	. . Foam Tape	A/R	X	X	X
–	MS24693-S51	. . Screw	4	X	X	X
–	AN531-8R8	. . Screw (Superseded by MS24693-S51)	4	X	X	X
–	AN525-10R7	. . Screw	2	X	X	X
–	1/2 X 8 PK	. . Screw	14	X	X	X
–	MS35206-245	. . Screw	6	X	X	X
–	NAS1149FN816P	. . Washer	7	X	X	X
–	AN960-8L	. . Washer (Alternate)	7	X	X	X
13	4114029-1	. Access Panel (L/H)	1	X	X	X
13	4114026-3	. Access Panel (L/H) (Obsolete, replaced by 4114029-1)	1	X	X	X
14	4114029-2	. Access Panel (R/H)	1	X	X	X
14	4114026-4	. Access Panel (R/H) (Obsolete, replaced by 4114029-2)	1	X	X	X
15	4114010-11	. Cover	2	X	X	X
16	4119316-903	. Exit Duct Cone	1	X	X	X
–	4119316-7	. . Exit Duct and Cowl Support/Installation	REF		X	X
–	A06195-8Z-1D	. . Nut, Tinnerman	8	X	X	X
–	CCR-264-SS-3-3	. . Rivet	16	X	X	X
–	4119364-13	. . Drain Tube	1	X	X	X
–	4119365-13	. . Rolled Angle	1	X	X	X
–	4119365-11	. . Rolled Angle (Alternate)	1	X	X	X
–	MS20470AD4-2	. . Rivet	4	X	X	X
17	8X1/2	. . Screw	20	X	X	X
–●●	MS21080-08K	. . Nut Plate	6	X	X	X
18	A06195-8Z-1D	. . Nut, Tinnerman	6	X	X	X
19	CCR-264-SS-3-3	. . Rivet	12	X	X	X
20	4119316-5	. Channel Assembly (Left Side)	1	X	X	X

FIGURE 3-2. COWLING AND ACCESS PANELS

ITEM NUMBER	PART NUMBER	DESCRIPTION	QTY PER ASSY	EFFECTIVITY		
				TH-28	480	480B
–	A06195-8Z-1D	. . Nut, Tinnerman	3	X	X	X
–	MS20426AD3-4	. . Rivet	6	X	X	X
21	4119316-6	. Channel Assembly (Right Side)	1	X	X	X
–	A06195-8Z-1D	. . Nut, Tinnerman	3	X	X	X
–	MS20426AD3-4	. . Rivet	6	X	X	X
22	MS27039-0808	. Screw	4	X	X	X
23	NAS1149DN832H	. Washer	4	X	X	X
23	AN960D8	. Washer (Alternate)	4	X	X	X
24	MS27039-1-08	. Screw	2	X	X	X
25	NAS1149D0316H	. Washer	2	X	X	X
25	AN960D10L	. Washer (Alternate)	2	X	X	X
26	NAS1068A3	. Nut Plate	2	X	X	X
27	CCR-264-SS-3-3	. Rivet	4	X	X	X
28	4119315-3	. Duct Assembly (Left Side)	1	X	X	X
–	NAS686A08K	. . Nut Plate	2	X	X	X
–	MS20426AD3-3	. . Rivet	4	X	X	X
29	4119315-4	. Duct Assembly (Right Side)	1	X	X	X
–	NAS686A08K	. . Nut Plate	2	X	X	X
–	MS20426AD3-3	. . Rivet	4	X	X	X
30	4119361-13	. Closeout	1	X	X	X
31	AN525-832R10	. Screw	4	X	X	X
32	MS20253-P2	. Hinge Pin, 42 inches	2	X	X	X

* Early production TH-28s and 480s had a two-piece step/oil cooler exit access panel. Contact Enstrom Customer Service for part number information.

** Part of the Increased Cooling Kit, P/N 4230031, which increases the ambient temperature operating limitations. Eligible for installation on 480B, S/N 5089 and subsequent.

† These assemblies are installed on the 480B, S/N 5114 and subsequent, and are equipped with additional cooling holes. Assemblies with additional cooling holes are part of the Increased Cooling Kit, P/N 4230031, for 480B, S/N 5089 through 5113, and are eligible for installation on all TH-28, 480, and 480B aircraft.

‡ Installed on 480B, S/N 5114 and subsequent. Part of the Increased Cooling Kit, P/N 4230031, for 480B, S/N 5089 through 5113.

≡ See Appendix A for equivalent part information.

● Effectivity 480B S/N 5148 and subsequent. Retrofittable to 480 S/N 5001 subsequent, and 480B S/N 5042 subsequent.

●● Effectivity 480B S/N 5155 and subsequent. Eligibility 480 S/N 5001, 480B S/N 5042 and subsequent.

††	Effectivity 480B S/N 5161 and subsequent. Eligibility 480 S/N 5001, 480B S/N 5042 and subsequent.
‡‡	Effectivity 480B S/N 5164 and subsequent. Retrofittable to 480 S/N 5001 to 5041 and 480B S/N 5042 and subsequent.
♦	The 85-12-140-20 Wing Stud Fastener is an acceptable alternate to the 58-12-140-16 Wing Stud Fastener when unpainted.
♦♦	Replaces previous 4220150 Cowling Doors for the Increased Cooling Kit. Effectivity 480B S/N 5207 and subsequent. Retrofittable to 480 S/N 5001 and subsequent, and 480B S/N 5042 and subsequent.
Δ	CCR264SS-3-03 rivet with NAS1149FN316P is an acceptable alternate.
▼	5X #41 holes added on the forward edge.
∞	Optional non-vented cowl doors.
±	Effectivity 480B S/N 5207 and subsequent. Eligibility 480 S/N 5001 and subsequent.

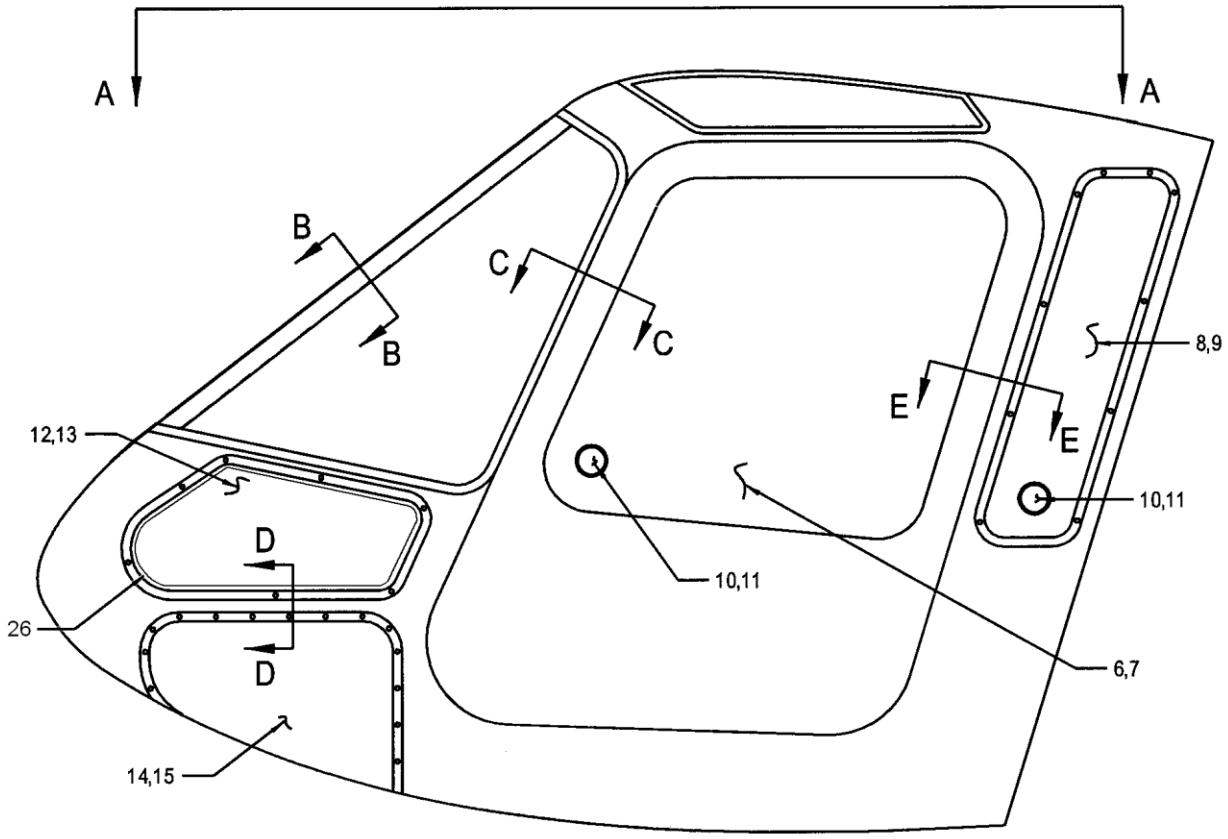

LOOKING FROM LEFT

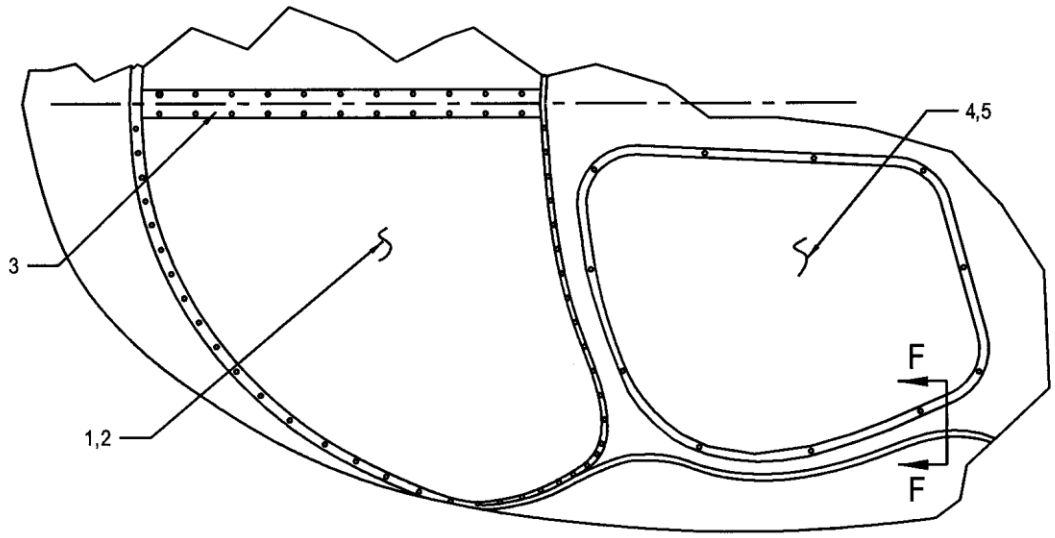

VIEW A-A

Sheet 1 of 3

FIGURE 3-3. WINDSHIELD AND WINDOW INSTALLATION

FIGURE 3-6. CABIN DOOR ASSEMBLY

ITEM NUMBER	PART NUMBER	DESCRIPTION	QTY PER ASSY	EFFECTIVITY		
				TH-28	480	480B
–	4118310-905	Door Assembly Cabin Left (Fully Assembled)	1		X	X
–	4118310-906	Door Assembly Cabin Right (Fully Assembled)	1		X	X
010	4118310-5	. Door Assembly (LH)	1		X	X
020	4118310-6	. Door Assembly (RH)	1		X	X
030	4114002-21	. Glass, Door (LH)	1		X	X
040	4114002-22	. Glass, Door (RH)	1		X	X
050	4118309-903	. Door Frame Fiberglass Assy Bonded (L/H)	1		X	X
060	4118309-904	. Door Frame Fiberglass Assy Bonded (R/H)	1		X	X
070	4118312-21	. Trigger-Door Handle Latch Stop (L/H)	1		X	X
080	4118312-22	. Trigger-Door Handle Latch Stop (R/H)	1		X	X
090	MS18066-8	. Set Screw	1		X	X
090	MS18066-25	. Set Screw (Replaced by MS18066-8)	1		X	X
100	MS16562-216	. Roll Pin	1		X	X
100	23S-094-075	. Roll Pin (Replaced by MS16562-216)	1		X	X
110	MS21044N4	. Nut	2		X	X
110	AN364-428A	. Nut (Replaced by MS21044N4)	2		X	X
120	AN960-416L	. Washer, Flat	2		X	X
130	4118292-3	. Linkage Assy Door Handle (R/H)	1		X	X
140	4118292-17	. Bushing Door Handle (L/H)	1		X	X
150	5133-25-S-PP	. Ring, Snap	1		X	X
160	AN526-1032R8	. Screw, Machine	1		X	X
170	AN960-10	. Washer, Flat	1		X	X
180	AN364-1032A	. Nut, Hex	1		X	X
190	4118291-5	. Bellcrank Assembly	1		X	X
200	4118291-6	. Bellcrank Assembly	1		X	X
210	4118291-25	. Shoulder Screw Door Latch (R/H)	1		X	X
220	AN526-1032R6	. Screw, Machine	1		X	X
230	4118294-19	. Cover Plate Upper	1		X	X
240	4118294-20	. Cover Plate Upper	1		X	X
250	MS24694-S51	. Screw	2		X	X
250	MS24694-51	. Screw (Replaced by MS24694-S51)	2		X	X
260	AN526-1032R6	. Screw	2		X	X
260	AN526-1032R8	. Screw, Machine (Replaced by AN526-1032R6)	2		X	X
270▼	HFVV3M	. Rod End	1		X	X
280	4118292-1	. Linkage Assembly	1		X	X

FIGURE 3-6. CABIN DOOR ASSEMBLY

ITEM NUMBER	PART NUMBER	DESCRIPTION	QTY PER ASSY	EFFECTIVITY		
				TH-28	480	480B
290	4118292-47	. Bellcrank Door Handle Linkage	1		X	X
300	MS18066-8	. Screw, Set	1		X	X
310	4118260-5	. Handle Assembly	1		X	X
320	4118260-6	. Handle Assembly	1		X	X
330	4118292-13	. Link Door Handle	1		X	X
340	4118292-17	. Bushing Door Handle (L/H)	2		X	X
350	5133-25-S-PP	. Ring, Snap	2		X	X
360	4118291-101	. Bellcrank Assembly	1		X	X
370	4118291-102	. Bellcrank Assembly	1		X	X
380	4118291-25	. Shoulder Screw Door Latch (L/H)	1		X	X
390	AN526-1032R8	. Screw	1		X	X
390	AN526-1032R6	. Screw, Machine (Replaced by AN526-1032R8)	1		X	X
400	4118292-43	. Bushing Door Handle (R/H)	1		X	X
410	E-18STPA	. Clip	1		X	X
410	5133-18-S-PP	. Ring, Snap (Replaced by E-18STPA)	1		X	X
420	4118294-26	. Cover Plate Top	1		X	X
430	4118313-1	. Cover Assembly Handle Latch Stop (L/H)	1		X	X
440	MS24694-51	. Screw, Machine	2		X	X
450	AN526-1032R8	. Screw, Machine	4		X	X
460	4118291-7	. Bellcrank Assembly	1		X	X
470	4118291-8	. Bellcrank Assembly	1		X	X
480	4118291-25	. Shoulder Screw Door Latch (R/H)	1		X	X
490	AN526-1032R6	. Screw	1		X	X
490	MS24694-47	. Screw (Replaced by AN526-1032R6)	1		X	X
500	4118294-25	. Cover Plate Top	1		X	X
510	4118294-26	. Cover Plate Top	1		X	X
520	MS24694-51	. Screw	4		X	X
–525●	HS-99338	. Clip	1		X	X
530●	HS-99417	. Clip	2		X	X
540	4118292-33	. Linkage Rod Door Handle (L/H)	1		X	X
550	4118292-34	. Linkage Rod Door Handle (R/H)	1		X	X
560▼	HFVV3M	. Rod End	1		X	X
570	AN315-3R	. Nut, Hex	1		X	X
580	AN960-10	. Washer, Flat	1		X	X
590	AN525-10R10	. Screw	1		X	X
590	AN526-1032R8	. Screw, Machine (Replaced by AN525-10R10)	1		X	X

FIGURE 3-6. CABIN DOOR ASSEMBLY

ITEM NUMBER	PART NUMBER	DESCRIPTION	QTY PER ASSY	EFFECTIVITY		
				TH-28	480	480B
600	AN364-1032A	. Nut, Hex	1		X	X
610	4118292-7	. Bellcrank Assembly	1		X	X
620	4118292-8	. Bellcrank Assembly	1		X	X
630	4118291-13	. Spacer Door Latch Bellcrank	1		X	X
640	AN525-10R12	. Screw	1		X	X
640	AN526-1032R8	. Screw, Machine (Replaced by AN525-10R12)	1		X	X
–645●	HS-99338	. Clip	1		X	X
650●	HS-99417	. Clip	2		X	X
660	4118292-29	. Linkage Rod Door Handle (L/H)	1		X	X
670	4118292-30	. Linkage Rod Door Handle (R/H)	1		X	X
680	4118308-11	. Cover Plate Upper	1		X	X
690	4118308-12	. Cover Plate Upper	1		X	X
700	AN530-6R4	. Screw	3		X	X
700	AN526-1032R8	. Screw, Machine (Replaced by AN530-6R4)	3		X	X
710▼	HFVV3M	. Rod End	1		X	X
720	AN315-3R	. Nut, Hex	1		X	X
730	AN960-10	. Washer, Flat	1		X	X
740	AN525-10R10	. Screw	1		X	X
740	AN526-1032R8	. Screw, Machine (Replaced by AN525-10R10)	1		X	X
750	AN364-1032A	. Nut, Hex	1		X	X
760	4118292-35	. Linkage Rod Door Handle (L/H)	1		X	X
770	4118292-36	. Linkage Rod Door Handle (R/H)	1		X	X
–775●	HS-99338	. Clip	1		X	X
780●	HS-99417	. Clip	2		X	X
790	4118292-5	. Bellcrank Assembly	1		X	X
800	4118292-6	. Bellcrank Assembly	1		X	X
810	4118291-13	. Spacer Door Latch Bellcrank	1		X	X
820	AN525-10R12	. Screw	1		X	X
820	AN526-1032R8	. Screw, Machine (Replaced by AN525-10R12)	1		X	X
830	4118292-43	. Bushing Door Handle (R/H)	1		X	X
840	E-18STPA	. Clip	1		X	X
840	5133-18-S-PP	. Ring, Snap (Replaced by E-18STPA)	1		X	X
850	4118308-13	. Cover Plate Lower	1		X	X
860	4118308-14	. Cover Plate Lower	1		X	X
870	AN530-6R4	. Screw	2		X	X

FIGURE 3-6. CABIN DOOR ASSEMBLY

ITEM NUMBER	PART NUMBER	DESCRIPTION	QTY PER ASSY	EFFECTIVITY		
				TH-28	480	480B
870	AN526-1032R8	. Screw, Machine (Replaced by AN530-6R4)	2		X	X
880	4118294-17	. Cover Plate Bottom	1		X	X
890	4118294-18	. Cover Plate Bottom	1		X	X
900	MS24694-S51	. Screw	2		X	X
900	MS24694-51	. Screw (Replaced by MS24694-S51)	2		X	X
910	AN526-1032R8	. Screw, Machine	2		X	X
920	4118291-9	. Bellcrank Assembly	1		X	X
930	4118291-10	. Bellcrank Assembly	1		X	X
940	4118291-25	. Shoulder Screw Door Latch (L/H)	1		X	X
950	AN526-1032R8	. Screw	1		X	X
950	AN526-1032R6	. Screw, Machine (Replaced by AN526-1032R8)	1		X	X

Note: All quantities listed are per door.

● 4118310-5 assembly requires quantity of 2 for HS-99338 and 1 for HS-99417.

▼ MW-3TM-27 is an acceptable alternate.

INTENTIONALLY LEFT BLANK

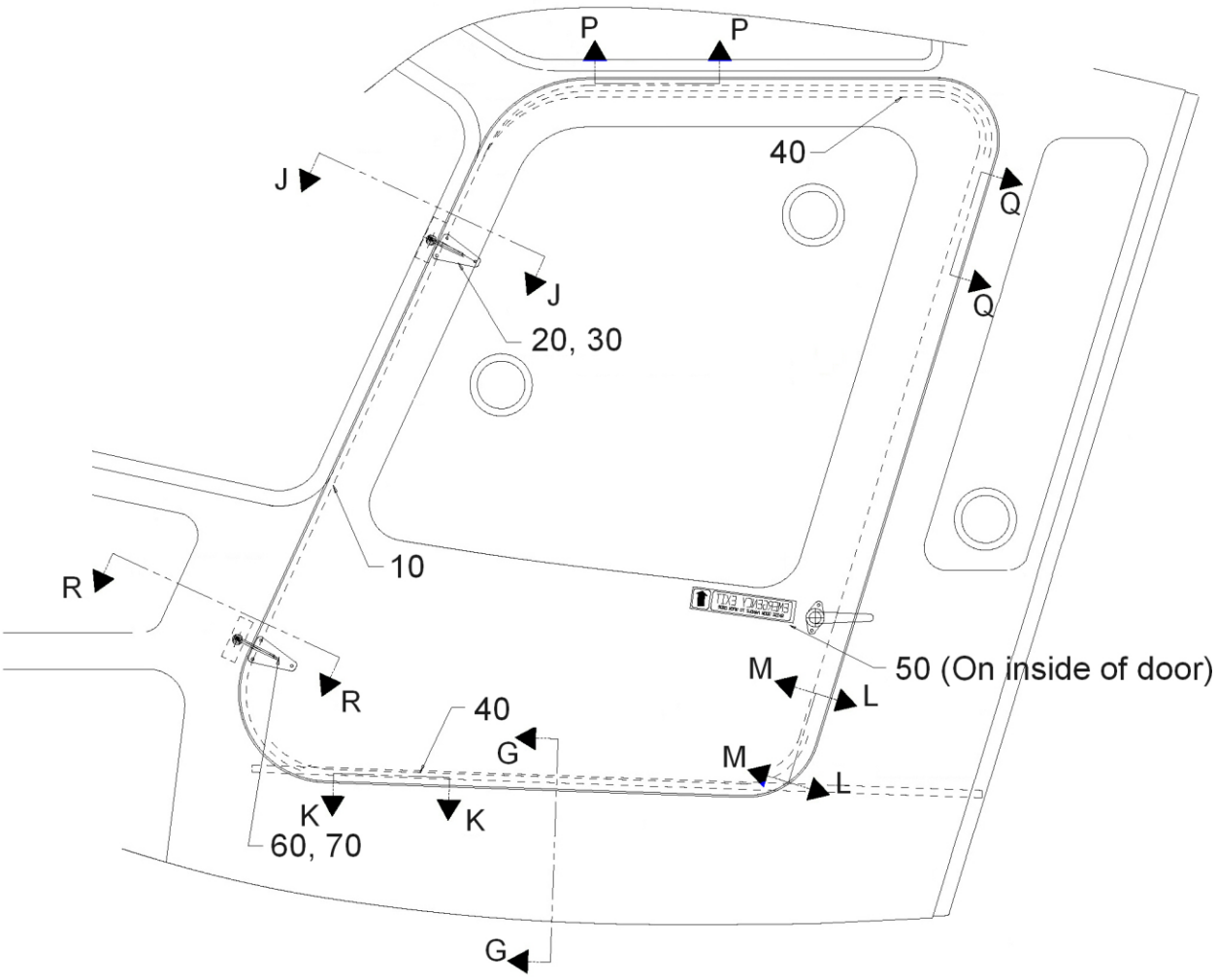

ORIENTATION VIEW
LOOKING INBOARD AT LEFT DOOR

Sheet 1 of 5

FIGURE 3-6.1 CABIN DOOR INSTALLATION

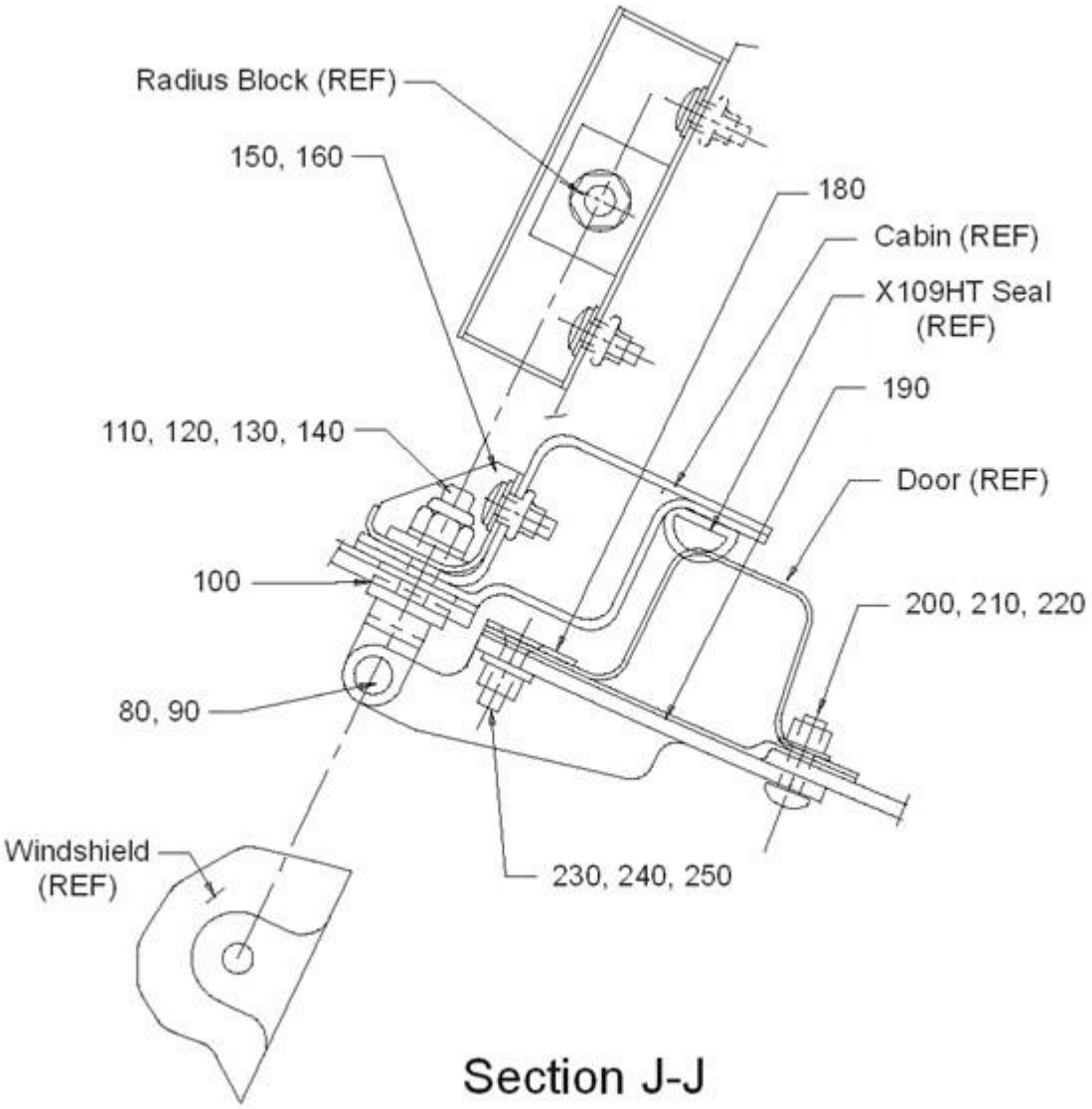

Sheet 2 of 5

FIGURE 3-6.1 CABIN DOOR INSTALLATION

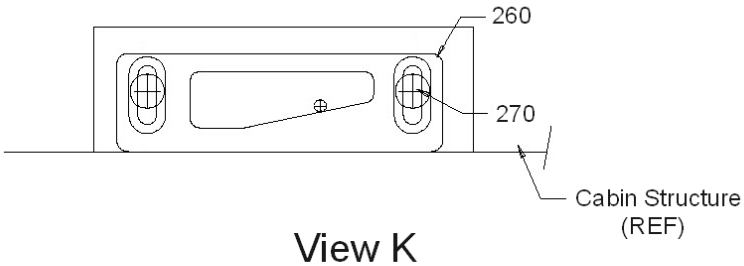

View K

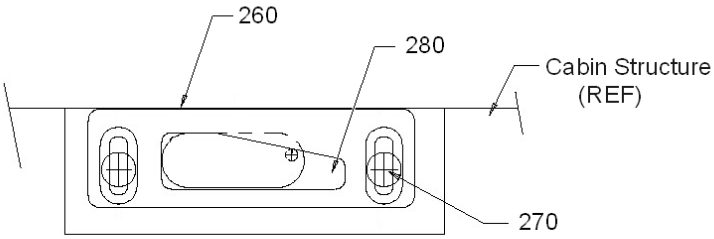

View P
Top Latch

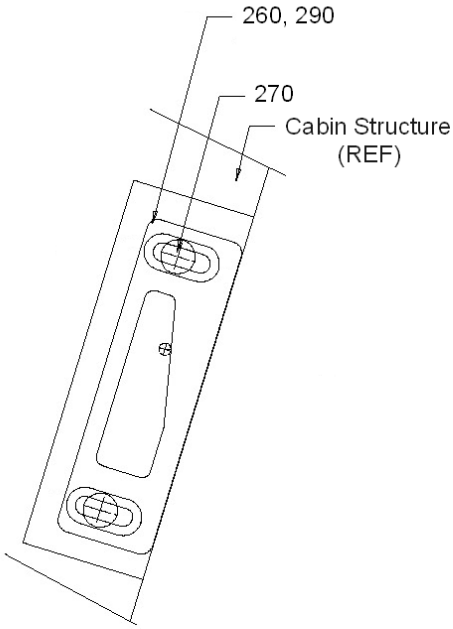

View Q

Sheet 3 of 5

FIGURE 3-6.1 CABIN DOOR INSTALLATION

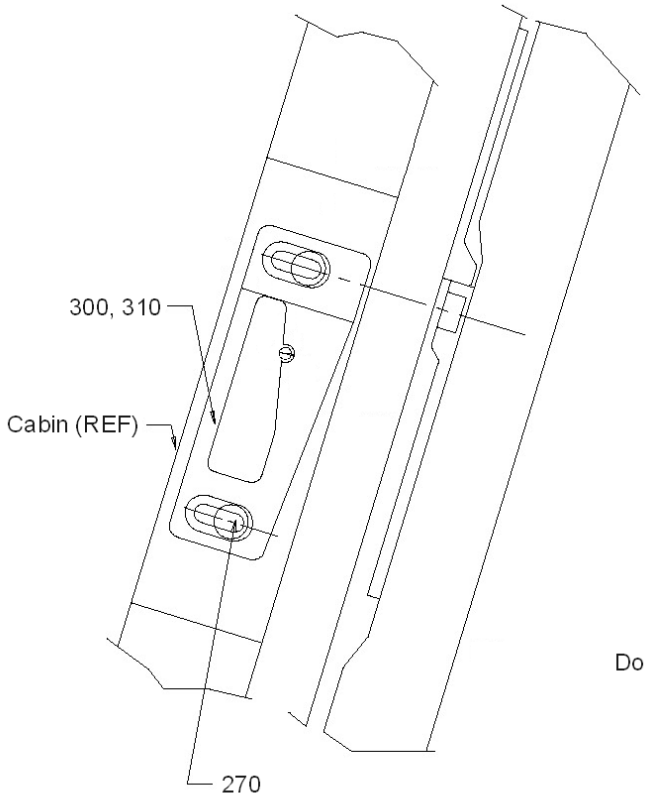

View L
Looking at Door Jamb

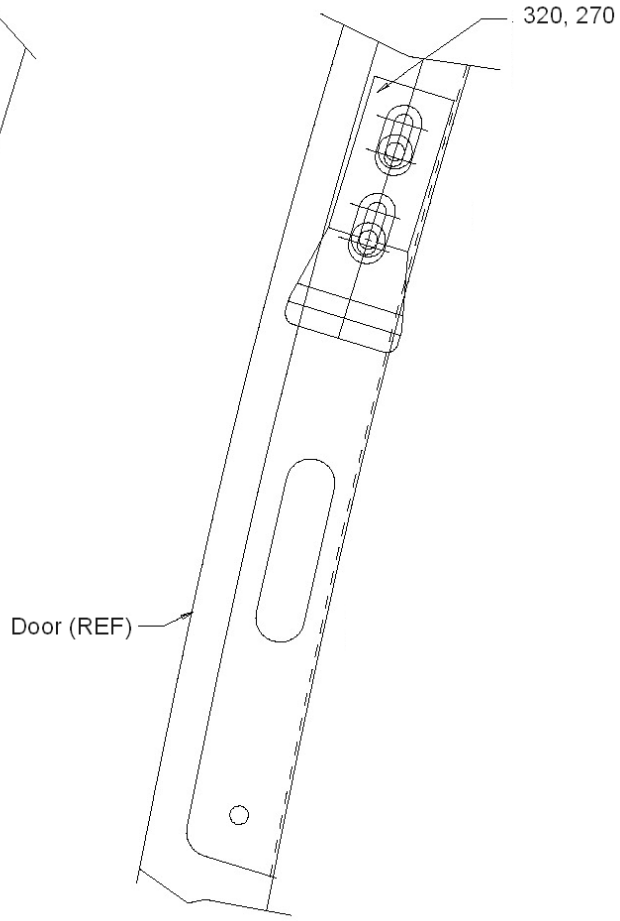

View M
Looking at Door Edge

Sheet 4 of 5

FIGURE 3-6.1 CABIN DOOR INSTALLATION

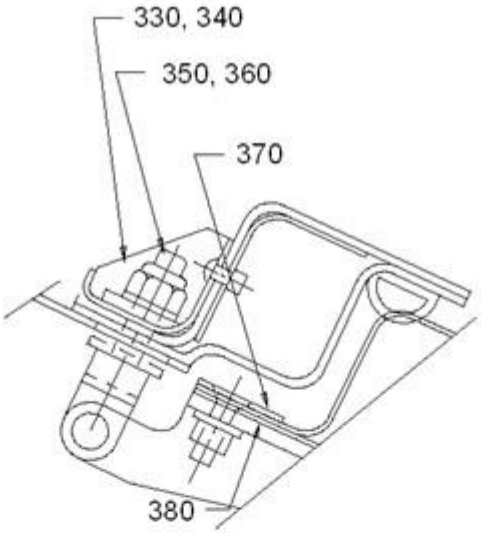

Section R-R

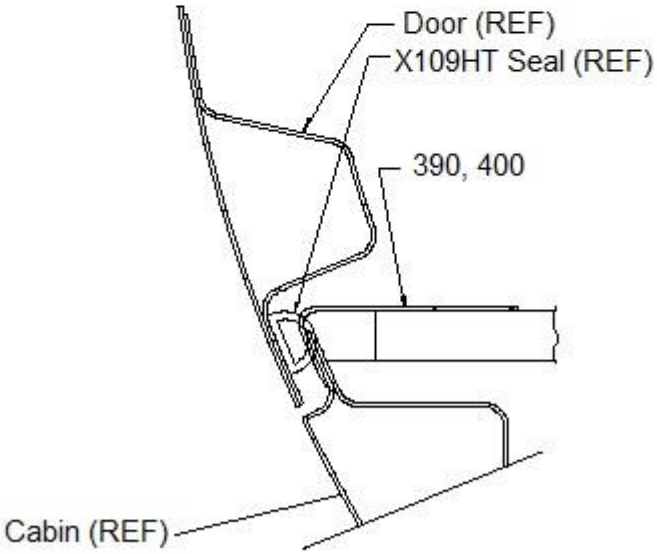

Section G-G

Sheet 5 of 5

FIGURE 3-6.1 CABIN DOOR INSTALLATION

FIGURE 3-6.1. CABIN DOOR INSTALLATION

ITEM NUMBER	PART NUMBER	DESCRIPTION	QTY PER ASSY	EFFECTIVITY		
				TH-28	480	480B
–	4118310-1	Cabin Door Installation Left	REF		X	X
–	4118310-2	Cabin Door Installation Right	REF		X	X
10	X109HT	. Seal	12 ft.		X	X
20	4118281-1	. Hinge Assembly	1		X	X
30	4118281-2	. Hinge Assembly	1		X	X
40	X1333HT	. Seal (Replaced by Item 10, X109HT)	9 ft.		X	X
50	4119839-13	. Placard: Emergency Exit	1		X	X
60	4118281-3	. Hinge Assembly	1		X	X
70	4118281-4	. Hinge Assembly	1		X	X
80	MS20392-2C17	. Pin, Clevis	2		X	X
90	MS24665-152	. Cotter Pin	2		X	X
90	AN381-2-10	. Pin Cotter (Superseded by MS24665-152)	2		X	X
100	1/4 Harper	. Washer (Used as shim)	A/R		X	X
110	4118278-23	. Door, Cabin, Hinge, Post	1		X	X
120	4118278-21	. Door Cabin Radius Block	1		X	X
130	NAS1149F0432P	. Washer, Flat	2		X	X
130	AN960-416L	. Washer, Flat (Alternate)	2		X	X
140	MS21044N4	. Nut, Hex	2		X	X
140	AN365-428A	. Nut, Hex (Superseded by MS21044N4)	2		X	X
150	4118284-1	. Hinge Doubler Weldment	2		X	X
160	CR3213-4-02	. Rivet	4		X	X
160	S8P-270	. PlusNut (Replaced by CR3213-4-02)	2		X	X
170	AN526-1032R8	. Screw (Replaced by CR3213-4-02)	1		X	X
180	4118284-13	. Doubler	2		X	X
190	4118281-19	. Shim-Door Hinge Machined	1		X	X
200	MS27039-1-08	. Screw, Machine	2		X	X
210	NAS1149D0316J	. Washer, Flat	2		X	X
210	AN960PD10L	. Washer, Flat (Alternate)	2		X	X
220	MS21042-3	. Nut, Hex	2		X	X
230	MS24694-S52	. Screw, Machine	4		X	X
230	AN509-10R10	. Screw, Machine (Superseded by MS24694-S52)	4		X	X
240	NAS1149D0316J	. Washer, Flat	6		X	X
240	AN960PD10L	. Washer, Flat (Alternate)	4		X	X
250	MS21042-3	. Nut, Hex	4		X	X
260	4118290-15	. Strike	3		X	X
270	MS24693-S273	. Screw	8		X	X

FIGURE 3-6.1. CABIN DOOR INSTALLATION

ITEM NUMBER	PART NUMBER	DESCRIPTION	QTY PER ASSY	EFFECTIVITY		
				TH-28	480	480B
270	MS27039-1-09	. Screw, Machine (Replaced by MS24693-S273)	8		X	X
280	4118290-33	. Door Latch Support Catch Plate	1		X	X
290	4118290-16	. Strike	3		X	X
300	4118290-17	. Door Latch Support Strike (LH)	1		X	X
310	4118290-18	. Door Latch Support Strike (RH)	1		X	X
320	4118290-21	. Door Latch Support Strike	1		X	X
330	4118284-1	. Doubler Door Hinge	1		X	X
340	MS20470AD4-4	. Rivet	2		X	X
350	4118278-23	. Door, Cabin, Hinge, Post	1		X	X
360	4118278-21	. Door Cabin Radius Block	1		X	X
370	4118284-13	. Doubler	1		X	X
380	4118281-21	. Shim-Door Hinge Machined	1		X	X
390	4114009-3	. Closure Plate Assembly	1		X	X
400	4114009-4	. Closure Plate Assembly	1		X	X

Note: All quantities listed are per door.

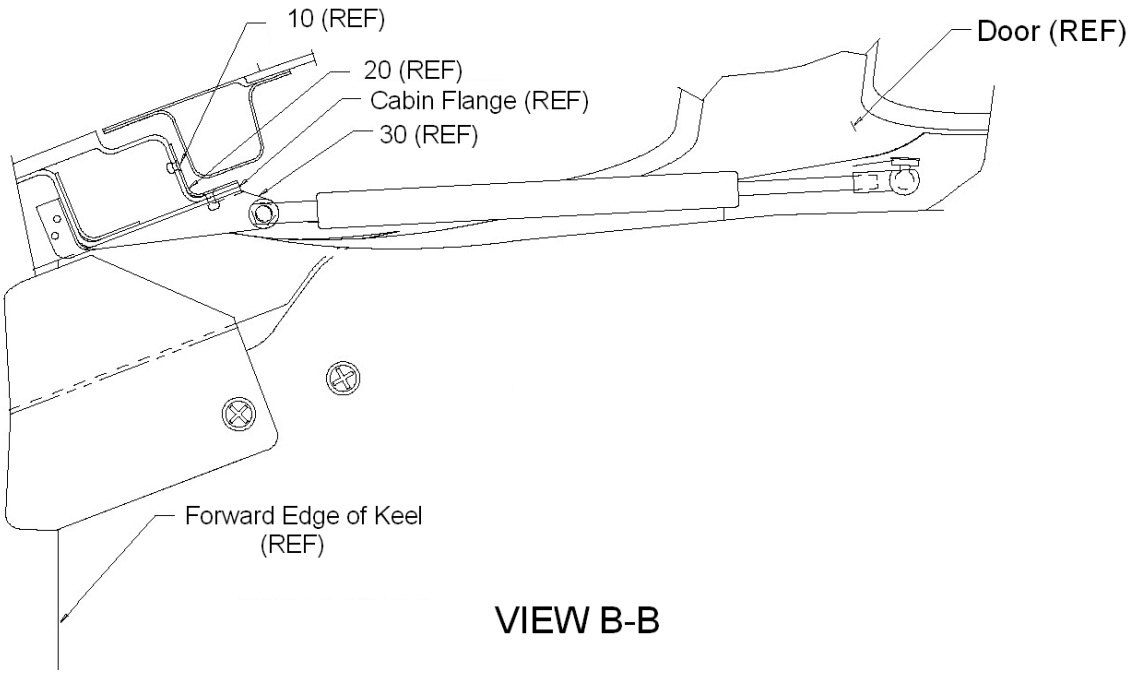

Sheet 2 of 2

FIGURE 3-6.2 CABIN DOOR OPENER

FIGURE 3-6.2 CABIN DOOR OPENER

ITEM NUMBER	PART NUMBER	DESCRIPTION	QTY PER ASSY	EFFECTIVITY		
				TH-28	480	480B
–	4220153-1	Door Opener/Restraint Installation	REF	X	X	X
10	CR3213-4-04	. Rivet	8	X	X	X
20	4220152-12	. Angle Bracket Door Opener (Right Side)	1	X	X	X
–20	4220152-11	. Angle Bracket Door Opener (Left Side)	1	X	X	X
–	CR3212-4-04	. Rivet	4		X	X
30	4220152-14	. Bracket Door Opener (Right Side)	1	X	X	X
–30	4220152-13	. Bracket Door Opener (Left Side)	1	X	X	X
40	CR3212-4-07	. Rivet	4	X	X	X
40	MS20426AD4-8	. Rivet (Replaced by CR3212-4-07)	4	X	X	X
50	M45913/2-4CG5C	. Nut	2		X	X
50	MS51922-1	. Nut (Superseded by M45913/2-4CG5C)	2	X	X	X
60	NPN	. Retaining Clip (Supplied with ECD4032-7)	4	X	X	X
70	ECD4032-7	. Opener: Door, Turbine Cabin	2	X	X	X
80	S25P280	. PlusNut	2	X	X	X
–	MS35333-42	. Washer	2		X	X

FIGURE 3-7. TAILCONE INSTALLATION

ITEM NUMBER	PART NUMBER	DESCRIPTION	QTY PER ASSY	EFFECTIVITY		
				TH-28	480	480B
1*	4112000-7	. Tailcone Assembly	1	X		
1	4112000-9	. Tailcone Assembly	1	X	X	
1	4112000-103	. Tailcone Assembly	1	X	X	X
2	MS20006H14	. Bolt	1	X	X	X
2	NAS146DH-24	. Bolt (Superseded by MS20006H14)	1	X	X	X
3	MS20002-C6	. Washer	5	X	X	X
4	MS20006H12	. Bolt	2	X	X	X
4	NAS146DH-22	. Bolt (Superseded by MS20006H12)	2	X	X	X
5**	3/8 Harper	. Washer, Flat	A/R	X	X	
6	4112025-11	. Shim Tailcone	A/R			X
7	4112025-13	. Shim Tailcone	A/R			X
8	4112025-15	. Shim Tailcone	A/R			X
9	4112025-17	. Shim Tailcone	A/R			X
10	4112025-19	. Shim Tailcone	A/R			X
11	MS20995C32	. Safety Wire	A/R			X

* TH-28, S/N 3004 & 3005

** Refer to maintenance manual for use of this washer as a shim.

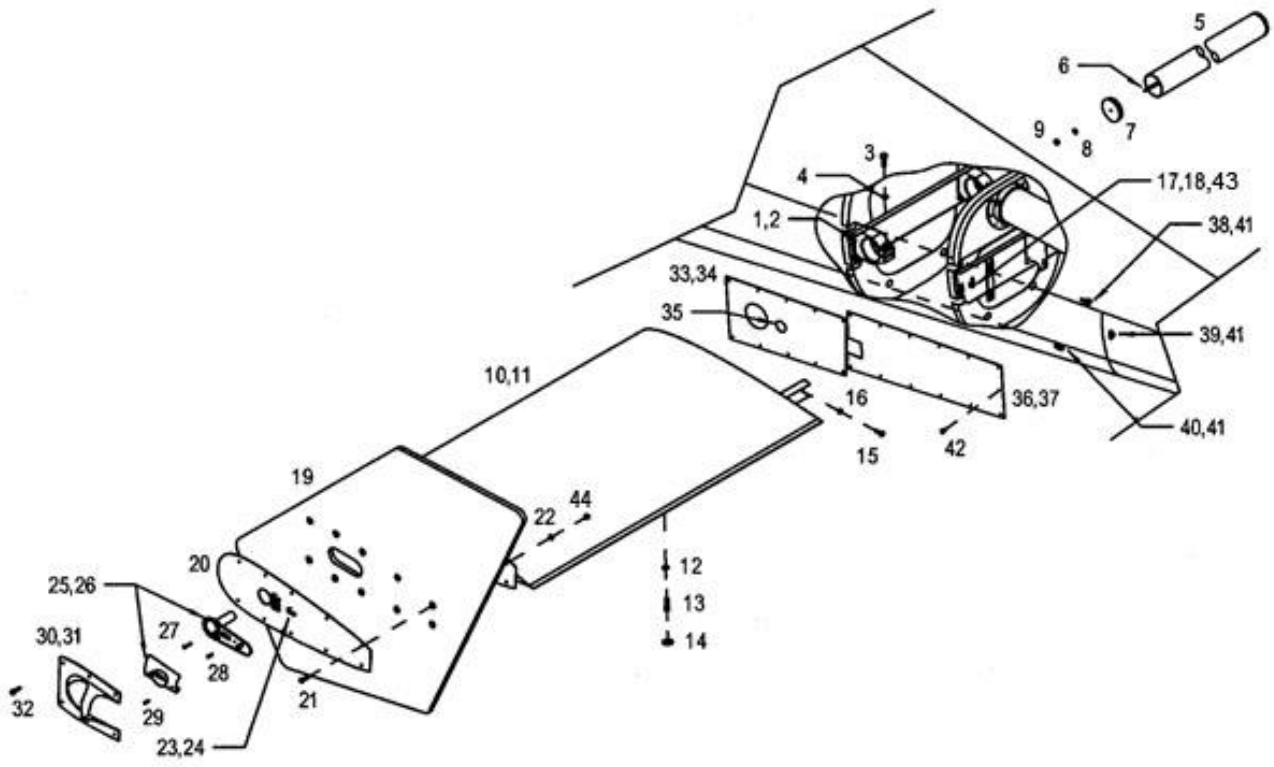

L/H Shown

FIGURE 3-8. HORIZONTAL AND VERTICAL STABILIZER INSTALLATION

FIGURE 3-8. HORIZONTAL AND VERTICAL STABILIZER INSTALLATION

ITEM NUMBER	PART NUMBER	DESCRIPTION	QTY PER ASSY	EFFECTIVITY		
				TH-28	480	480B
–	4200000-101	Horizontal/Vertical Stabilizer Instl	REF		X	X
1	4112004-1	. Spar Fitting Assembly	2	X	X	X
2	MS20470AD5-7	. Rivet	8	X	X	
2*	HL18PB70-5-5	. Hi Lok Assembly	8	X	X	X
3	NAS6604-9	. Bolt	2	X	X	X
3	AN4-10A	. Bolt (Superseded by NAS6604-9)	2	X	X	X
4●	NAS1149F0463P	. Washer				
4	AN960-416	. Washer (Superseded by NAS114F0463P)	2	X	X	X
4●	NAS1149F0432P	. Washer (Alternate)				
4	AN960-416L	. Washer (Alternate) (Superseded by NAS114F0432P)	2	X	X	X
5	4200002-11	. Spar	2	X	X	X
6	4200009-13	. Threaded Rod	2	X	X	X
7	4200009-11	. End Plug	2	X	X	X
8	NAS1149F0332P	. Washer	2	X	X	X
8	AN960-10L	. Washer (Alternate)	2	X	X	X
9	MS21044N3	. Lock Nut	2	X	X	X
9	AN365-1032A	. Lock Nut (Superseded by MS21044N3)	2	X	X	X
–	4200000-9	. Horizontal/Vertical Stabilizer Assembly L/H	REF	X	X	X
10	4200000-103	. . Horizontal Stabilizer Assembly L/H	1	X	X	X
–	4200000-10	. Horizontal/Vertical Stabilizer Assembly R/H	REF	X	X	X
11	4200000-104	. . Horizontal Stabilizer Assembly R/H	1	X	X	X
12	NAS1149F0432P	. Washer	6	X	X	X
13	MS16998-46	. Cap Screw	6	X	X	X
13	NAS1351-4-20P	. Cap Screw (Alternate)	6	X	X	X
14	BPF-1/2	. Cap Plug	6	X	X	X
15	NAS6603-2	. Bolt	4	X	X	X
15	AN3-4A	. Bolt (Superseded by NAS6603-2)	4	X	X	X
16●	NAS1149F0363P	. Washer	4	X	X	X
16	AN960-10	. Washer (Superseded by NAS1149F0363P)	4	X	X	X
17	MS21081-3	. Nut Plate	4	X	X	X
18	MS20426AD3-5	. Rivet	4	X	X	X
19	4200011-7	. Vertical Stabilizer Assembly	2	X	X	X
20	4200008-11	. End Plate	2	X	X	X
21	AN525-10R12	. Screw	8	X	X	X
21**	AN525-10R14	. Screw	8	X	X	X
22●	NAS1149D0316J	. Washer	20	X	X	X

FIGURE 3-8. HORIZONTAL AND VERTICAL STABILIZER INSTALLATION

ITEM NUMBER	PART NUMBER	DESCRIPTION	QTY PER ASSY	EFFECTIVITY		
				TH-28	480	480B
22	AN960PD10L	. Washer (Superseded by NAS1149D0316J)	20	X	X	X
23●	MS21078-06	. Nut Plate				
23***	NAJ1-62	. Nut Plate (Superseded by MS21078-06)	6	X	X	X
23	MS21080-06	. Nut Plate (Superseded by NAJ1-62)	6	X	X	X
24	MS20426AD3-4	. Rivet	12	X	X	X
25	01-0790006-03	. Red Forward Position Light, Clear Tail Position Light, and Clear Anti-Collision Light Assembly (Reference)	1	X	X	X
25	01-0790340-04	. LED Red Forward Position Light, LED Clear Tail Position Light, and Strobe Anti-Collision Light Assembly (Reference) Alternate	1	X	X	X
25	A600-PR-28	. Position/Strobe Light Assembly L/H Red (Reference) Alternate	1	X	X	X
26	01-0790006-01	. Green Forward Position Light, Clear Tail Position Light, and Clear Anti-Collision Light Assembly (Reference)	1	X	X	X
26	01-0790340-03	. LED Green Forward Position Light, LED Clear Tail Position Light, and Strobe Anti-Collision Light Assembly (Reference) Alternate	1	X	X	X
26	A600-PG-28	. Position/Strobe Light Assembly R/H Green (Reference) Alternate	1	X	X	X
27	AN525-632R10	. . Screw (Reference)	4	X	X	X
28	MS24693-S27	. . Screw (Reference)	2	X	X	X
28	AN507-632R7	. . Screw (Superseded by MS24693-S27) (Reference)	2	X	X	X
29	MS24693-S24	. . Screw (Reference)	2	X	X	X
29	AN507-632R4	. . Screw (Superseded by MS24693-S24) (Reference)	2	X	X	X
30	4200017-1	. Light Shield, L/H	1	X	X	X
31	4200017-2	. Light Shield, R/H	1	X	X	X
32	AN525-10R14	. Screw	12	X	X	X
33	4112003-11	. Side Closure L/H	1	X	X	X
34	4112003-12	. Side Closure R/H	1	X	X	X
35	MS35489-20	. Grommet	2	X	X	X
36	4112003-13	. Side Closure L/H	1	X	X	X
37	4112003-14	. Side Closure R/H	1	X	X	X
38	28-11237-11	. Nut Plate	8	X	X	X
39	22NA1-82	. Anchor Nut	2	X	X	X
40	22NA1-82BC	. Anchor Nut	32	X	X	X
41	CCR264SS-3-3	. Rivet	84	X	X	X

FIGURE 3-8. HORIZONTAL AND VERTICAL STABILIZER INSTALLATION

ITEM NUMBER	PART NUMBER	DESCRIPTION	QTY PER ASSY	EFFECTIVITY		
				TH-28	480	480B
42	AN525-832R6	. Screw	A/R	X	X	X
42	AN525-832R7	. Screw	A/R	X	X	X
42	AN525-832R8	. Screw	A/R	X	X	X
43●●	4200000-( )	. Shim	A/R	X	X	X
44	MS21083N3	. Lock Nut	20	X	X	X
44†	AN364-1032A	. Lock Nut (Superseded by MS21083N3)	20	X	X	X

* 480 S/N 5020 and subsequent, TH-28 S/N 3007 and subsequent. Retrofittable to earlier S/N aircraft, refer to Service Information Letter T-008.

** 480 S/N 5125 and subsequent.

† 480 S/N 5148 and subsequent.

*** Effectivity 480B S/N 5158 and subsequent. Retrofittable to 480 S/N 5100-5141, 480B S/N 5042 and subsequent.

● Effectivity 480B S/N 4197 and subsequent. Retrofittable to 480 S/N 5001-5041, 480B S/N 5042 and subsequent.

●● Shim between Stabilizer Assembly and MS21078-06 nut plate as needed. (-19 to -33 shims)

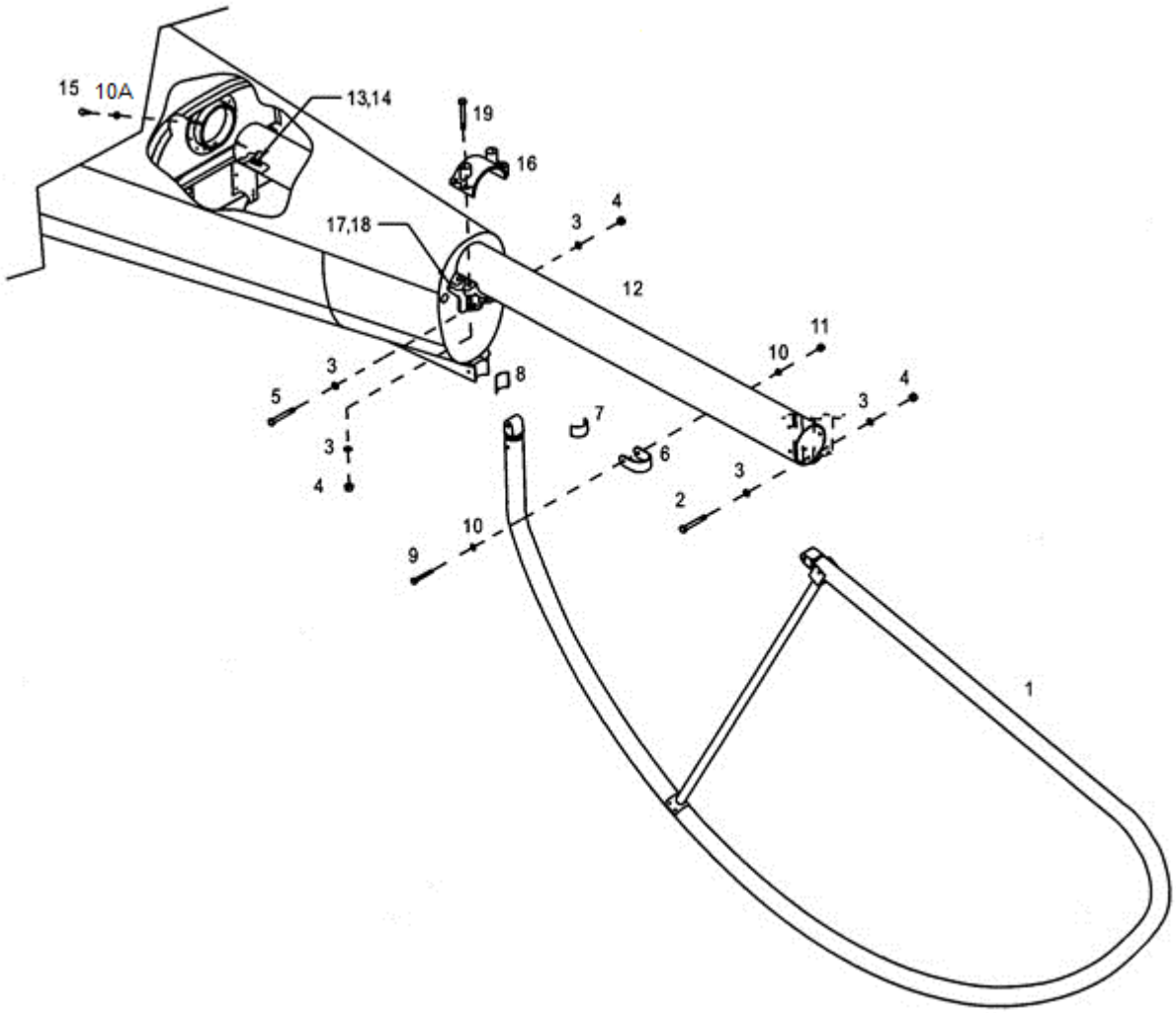

FIGURE 3-9. TAIL ROTOR GUARD AND EXTENSION TUBE INSTALLATION

FIGURE 3-15. SEAT INSTALLATION – 480/480B

ITEM NUMBER	PART NUMBER	DESCRIPTION	QTY PER ASSY	EFFECTIVITY		
				TH-28	480	480B
1▼	4119760-5	. Seat Assembly – Pilot (See Fig. 3-16 for breakdown)	1		X	X
2▼	4119760-3	. Seat Assembly - Copilot/Passenger (See Fig. 3-16 for breakdown)	1		X	X
3	4119764-33	. Seat Track	3		X	X
3*	4119764-19	. Seat Track (Obsolete, replace with 4119764-33)	3		X	
4	4119764-27	. Seat Track	1		X	X
4**	4119764-25	. Seat Track (Obsolete, replace with 4119764-27)	1		X	
5	4119764-31	. Seat Track	1		X	X
5*	4119764-23	. Seat Track (Obsolete, replace with 4119764-31)	1		X	
6	4119764-29	. Seat Track	1		X	X
6*	4119764-21	. Seat Track (Obsolete, replace with 4119764-29)	1		X	
7	MS27039-1-16	. Screw	10		X	X
8	AN960-10L	. Washer	12		X	X
9	AN365-1032A	. Nut	2		X	X
10≡	MS24694-S58	. Screw	25		X	X
11≡	MS24694-S51	. Screw	1		X	X

▼ 4119760-8 and 4119760-9 are acceptable alternates.

* Used on S/N 5001 thru 5013

** Used on S/N 5001 thru 5003

≡ See Appendix A for equivalent part information.

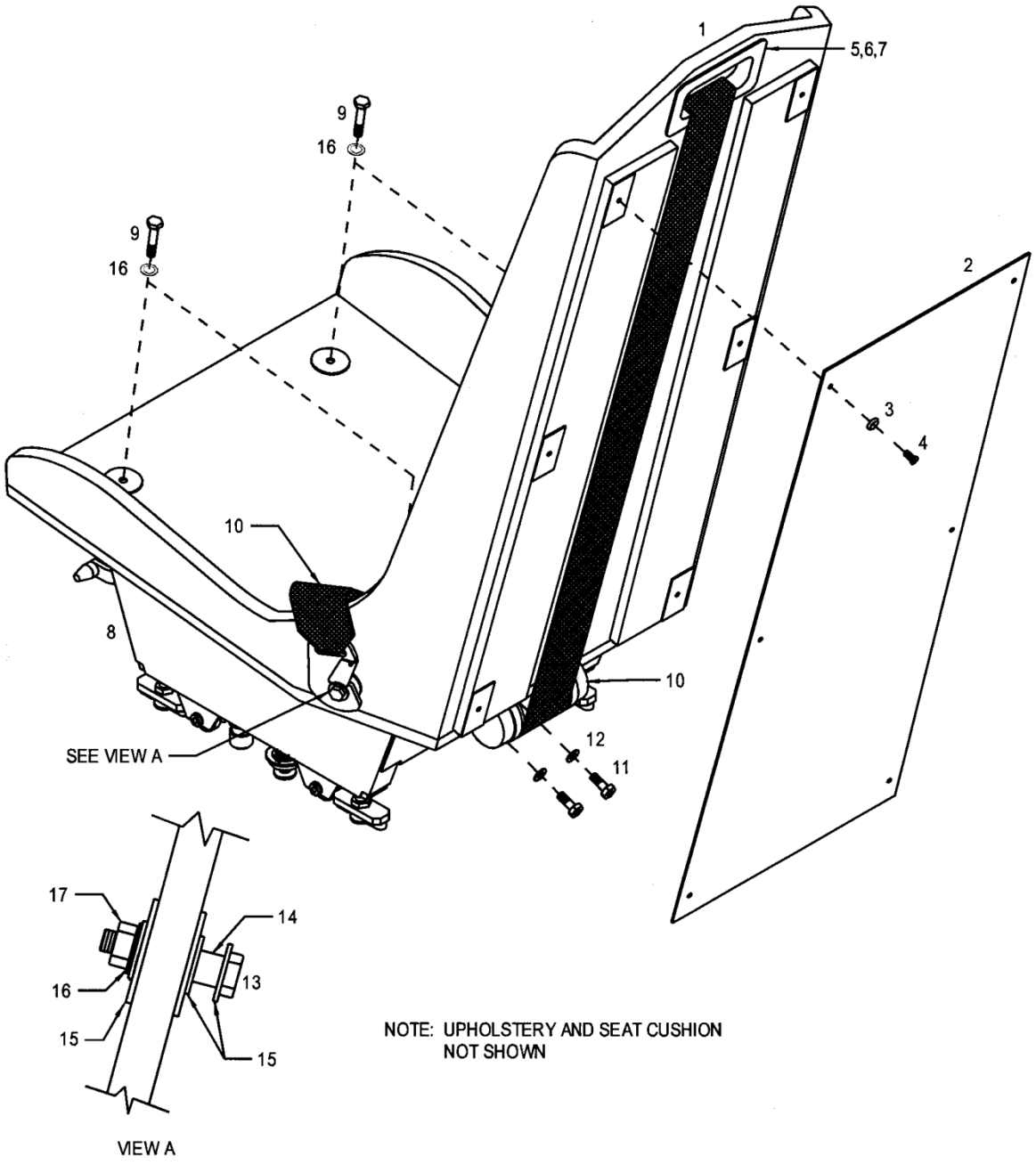

FIGURE 3-16. SEAT ASSEMBLY

FIGURE 3-16. SEAT ASSEMBLY

ITEM NUMBER	PART NUMBER	DESCRIPTION	QTY PER ASSY	EFFECTIVITY		
				TH-28	480	480B
–	4119760-5	. Seat Assembly - Pilot	1		X	X
–	4119760-3	. Seat Assembly - Copilot/Passenger	1		X	X
–	4119849-901	. . Seat Bucket Assembly (Includes upholstery and cushions)	1		X	X
–	4119863-11	. . . Cushion - Bucket Center	1		X	X
–	4119878-11	. . . Cushion - Bucket Left Side	1		X	X
–	4119878-12	. . . Cushion - Bucket Right Side	1		X	X
1	4119762-5	. . . Seat Bucket	1		X	X
2	4119783-25	. . . Panel	1		X	X
3	601-6	. . . Washer	6		X	X
4	AN531-6R8	. . . Screw	6		X	X
5	4119765-19	. . . Plate	1		X	X
6	4119765-17	. . . Flanged Block	1		X	X
7	AN507-6R8	. . . Screw	4		X	X
8	4119849-903	. . Seat Base - Used with 4119760-5 (Includes upholstery) See Fig. 3-17 for breakdown.	1		X	X
8	4119849-902	. . Seat Base - Used with 4119760-3 (Includes upholstery) See Fig. 3-17 for breakdown.	1		X	X
9	NAS6604-13	. . Bolt	4		X	X
10	ECD4061-1	. . Restraint Assembly	1		X	X
11	NAS6204-5	. . Bolt	2		X	X
12	NAS1149D0463J	. . Washer	2		X	X
13	NAS6204-22	. . Bolt	2		X	X
13	NAS6604-23	. . Bolt (Replaced by NAS6204-22)	2		X	X
14	4119780-23	. . Spacer	2		X	X
15	ECD050-11	. . Washer	6		X	X
15	C102780	. . Washer, Flat (Replaced by ECD050-11)	6		X	X
16	NAS1149F0432P	. . Washer	6		X	X
17	MS20364-428	. . Nut	2		X	X

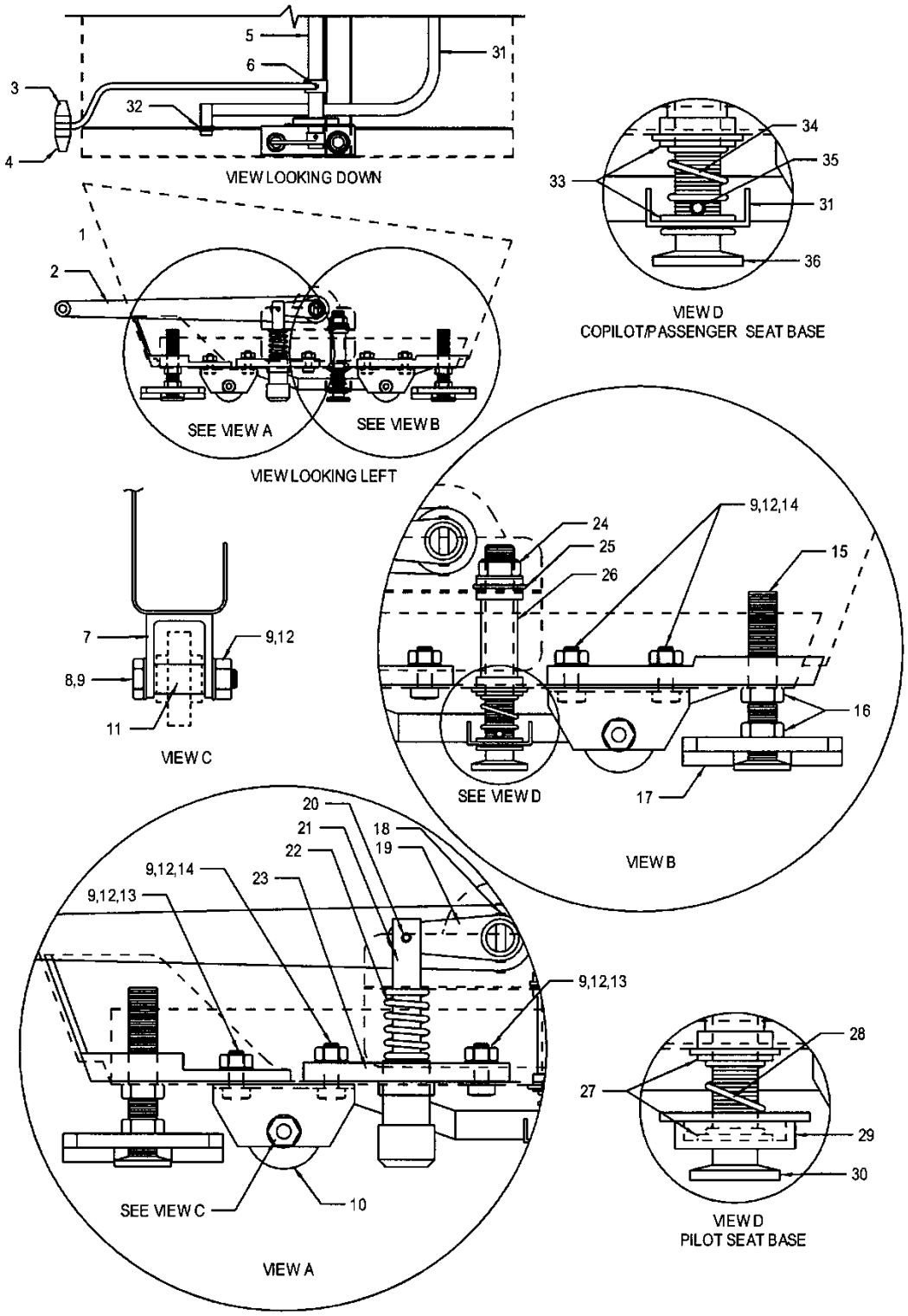

FIGURE 3-17. SEAT BASE ASSEMBLY

FIGURE 3-19. PASSENGER FOOTREST INSTALLATION

ITEM NUMBER	PART NUMBER	DESCRIPTION	QTY PER ASSY	EFFECTIVITY		
				TH-28	480	480B
–	4119841-5	Removable Footrest Installation	REF		X	X
1	4119842-5	. Footrest Assembly	1		X	X
–	4220125-19	. . Safety Flooring	1		X	X
–▼	108FR	. Polyken Tape	55”		X	X
–	105CPOLYKEN	. Tape (Installed behind flooring) (Replaced by 108FR)	A/R		X	X
2	4230005-11	. . Latch Assembly	1		X	X
3	MS20426A5-4	. . Rivet	2		X	X
4	4119845-11	. . Support Latch	2		X	X
5	MS16562-218	. . Spring Pin	2		X	X
6	MS20470AD4-6	. . Rivet	6		X	X
7	82-35-302-15	. Receptacle	1		X	X
8	MS20426AD3-4	. Rivet	2		X	X
9*	4119844-15	. Catch	2		X	X
9**	4119844-17	. Catch	2		X	
10	AN525-10R8	. Screw	4		X	X
11	4119858-13	. Angle	1		X	X
12	MS20470AD4-3	. Rivet	5		X	X
13	4230005-13	. Latch	1		X	X
14	MS24693-S272	. Screw	2		X	X
14	AN507-1032R8	. Screw (Superseded by MS24693-S272)	2		X	X
15	NAS1149F0332P	. Washer	2		X	X
15	AN960-10L	. Washer (Alternate)	2		X	X
16	MS21044N3	. Nut	2		X	X
16	AN365-1032A	. Nut (Superseded by MS21044N3)	2		X	X
–	4119855-1	. Tail Rotor Pedal Cover Assembly	1		X	X
17	4119855-11	. Pedal Cover	1		X	X
18	82-12-120-16	. Wing Fastener	1		X	X
19	82-32-101-20	. Retainer, Ring, Split	1		X	X

* Effectivity 480/480B S/N 5019 and subsequent.

** Effectivity 480 S/N 5001 through 5018.

▼ Apply to opposite side of 4220125-19.

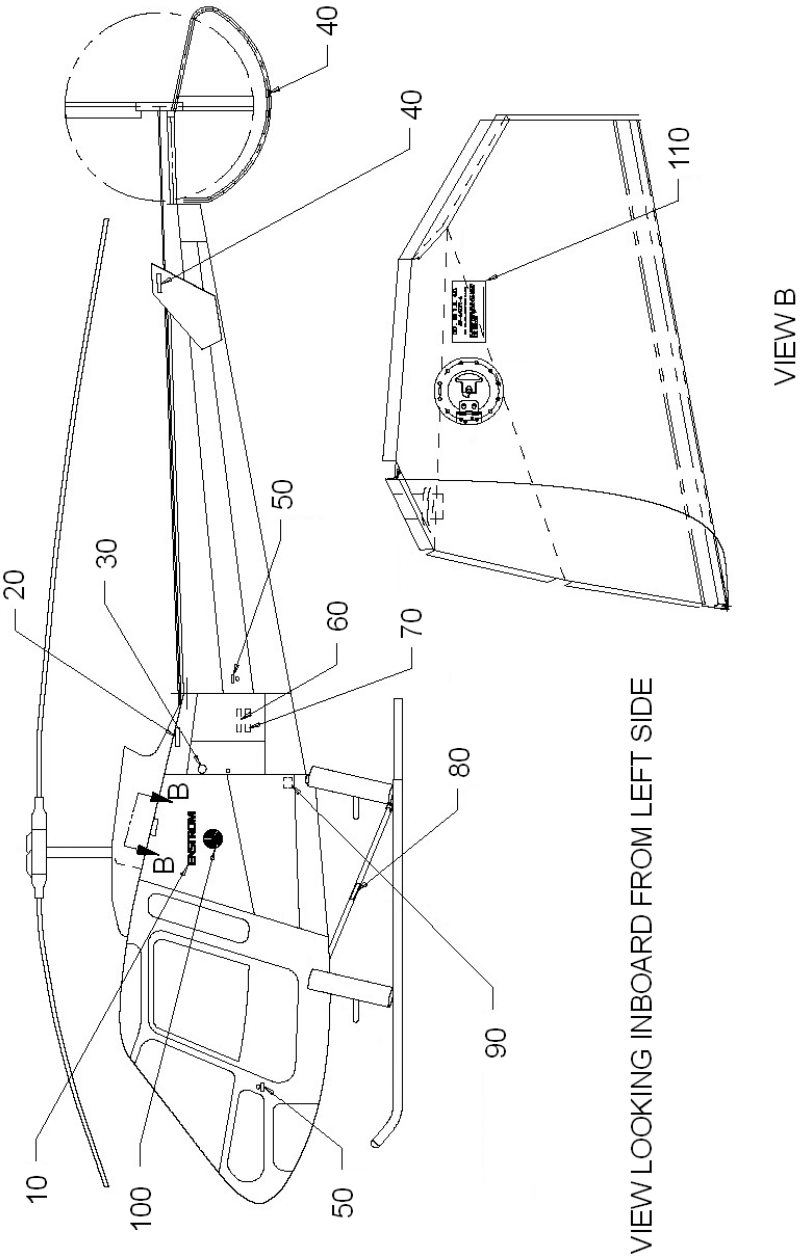

Sheet 1 of 2

FIGURE 3-20. EXTERIOR MARKINGS

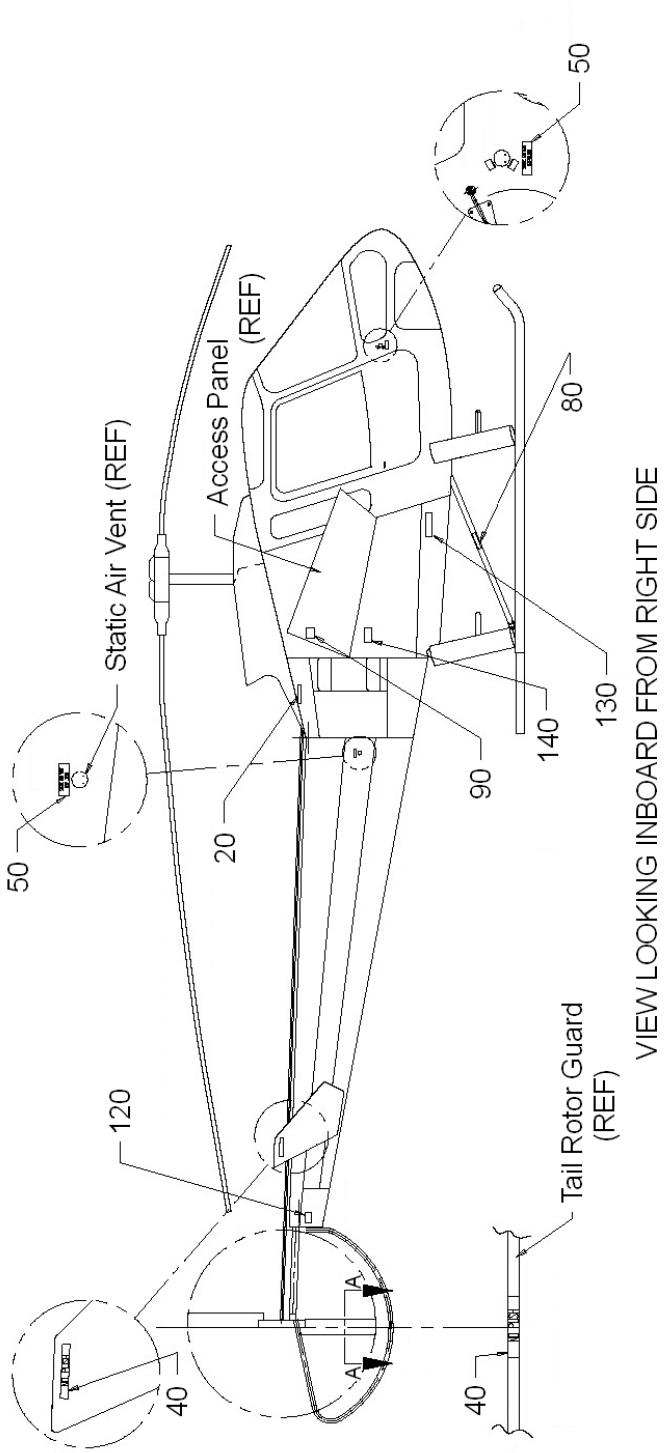

Sheet 2 of 2

FIGURE 3-20. EXTERIOR MARKINGS

FIGURE 3-20. EXTERIOR MARKINGS

ITEM NUMBER	PART NUMBER	DESCRIPTION	QTY PER ASSY	EFFECTIVITY		
				TH-28	480	480B
10	28-00014-1	. Placard: Decal/Stencil “Enstrom”	2		X	X
20	28-17164-13	. Placard: No Step	2		X	X
30*	4119835-31GRD	. Placard: Ground Symbol	2		X	X
40	28-20107-11	. Placard: “No Push”	4		X	X
50	4119913-11	. Placard: Static Air Vent	4		X	X
60**	4119835-31	. Placard: Interior, Max Cargo (Wht/Blk)	1		X	X
70**	4119835-27	. Placard: Interior, Gross Weight (Wht/Red)	1		X	X
80	28-17164-11	. Placard: “No Step” (Red/Wht)	2		X	X
90†	4119914-11	. Placard: Warning, “B” Nut	2		X	X
90	23052363	. Placard: Warning, “B” Nut (Superseded by 4119914-11)	2		X	X
100	28-00015-1	. Placard: Decal/Stencil, 6” Logo	2		X	X
110*	4119835-31C480	. Placard: Cap 90 US Gal JP4 480	1		X	
110*	4119835-31C480B	. Placard: Cap 90 US Gal JP4 480B	1			X
120	28-18009-2	. Placard: Data, A/C Mfg (480)	1		X	
–120A◊	28-18009-23	. Placard-480B Model	1			X
–120B●	28-18009-13	. Placard: Data, A/C Mfg (480B) (Superseded by 28-18009-23)	1			X
–120C	28-18009-3	. Placard: Data, A/C Mfg (480B) (Superseded by 28-18009-13)	1			X
–120D●	28-18009-17	. Placard: Data, A/C Mfg (Superseded by 28-18009-23)	1		X	X
–120E♦	28-18009-21	. Placard-480B Model (Superseded by 28-18009-23)	1			X
–	CCR274SS-3-02	. . Rivet	4		X	X
130▲	28-19061-11	. Placard: “APU Connector Inside”	1		X	X
140	4119892-11	. Placard: Engine Oil Warning	1		X	X

* These placards are color coordinated with the aircraft. Please provide S/N when ordering.

** These placards are purchased per sheet, and include all of the placards with the same root part number except those noted with an asterisks (*) above.

† Effectivity 480B S/N 5155 and subsequent. Retrofittable to 480 S/N 5001, 480B S/N and 5042 subsequent.

◊ Effectivity 480B S/N 5256 and subsequent. Retrofittable to 480B S/N 5042 and subsequent.

● Effectivity 480B S/N 5183 through S/N 5255. Retrofittable to 480 S/N 5001 and subsequent and 480B S/N 5042 through S/N 5182.

▲ May be affixed below APU door, if installed.

♦ Effectivity 480B S/N CE5001 and subsequent. Retrofittable to 480B S/N CE5001 and subsequent.

INTENTIONALLY LEFT BLANK

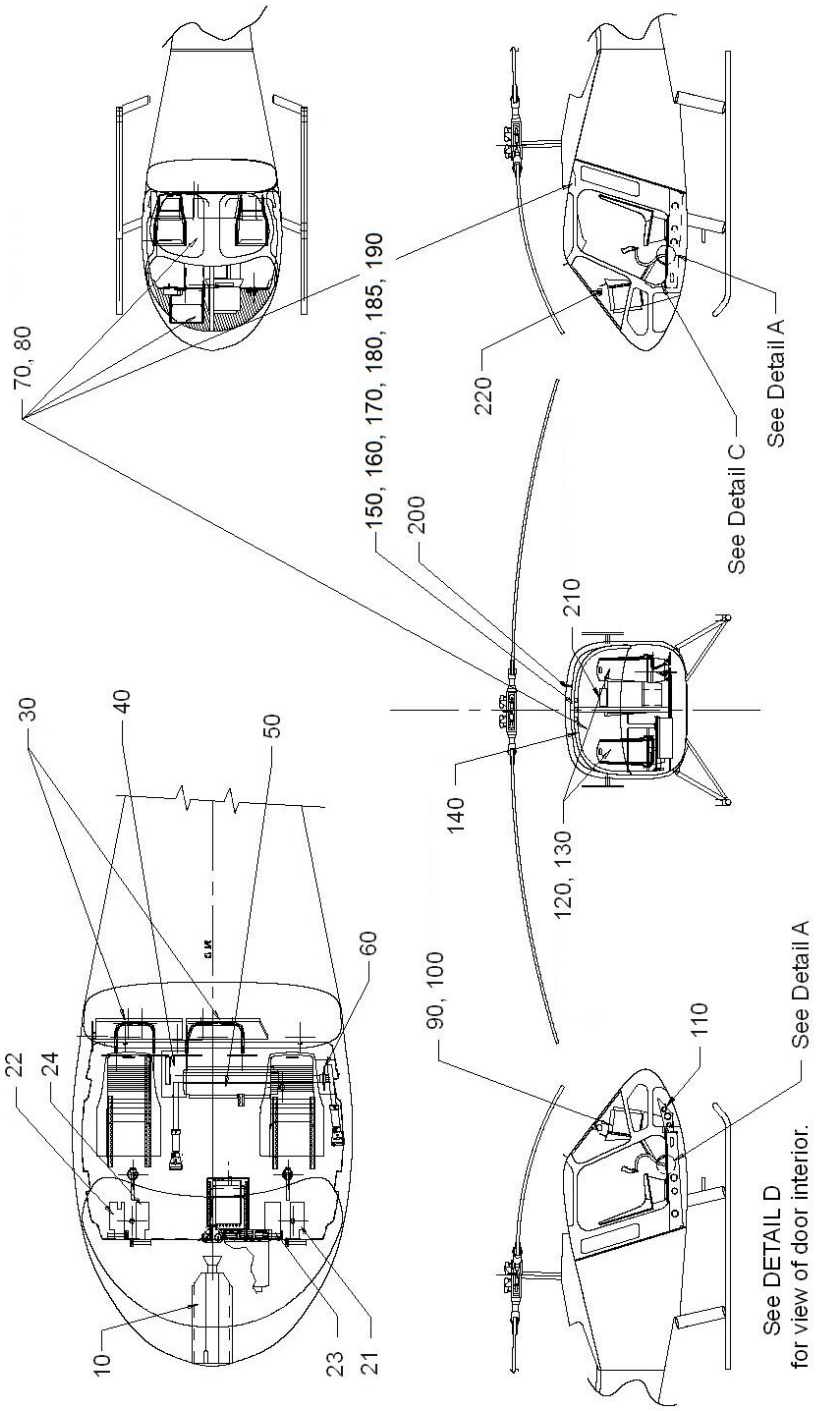

Sheet 1 of 2

FIGURE 3-21. INTERIORS

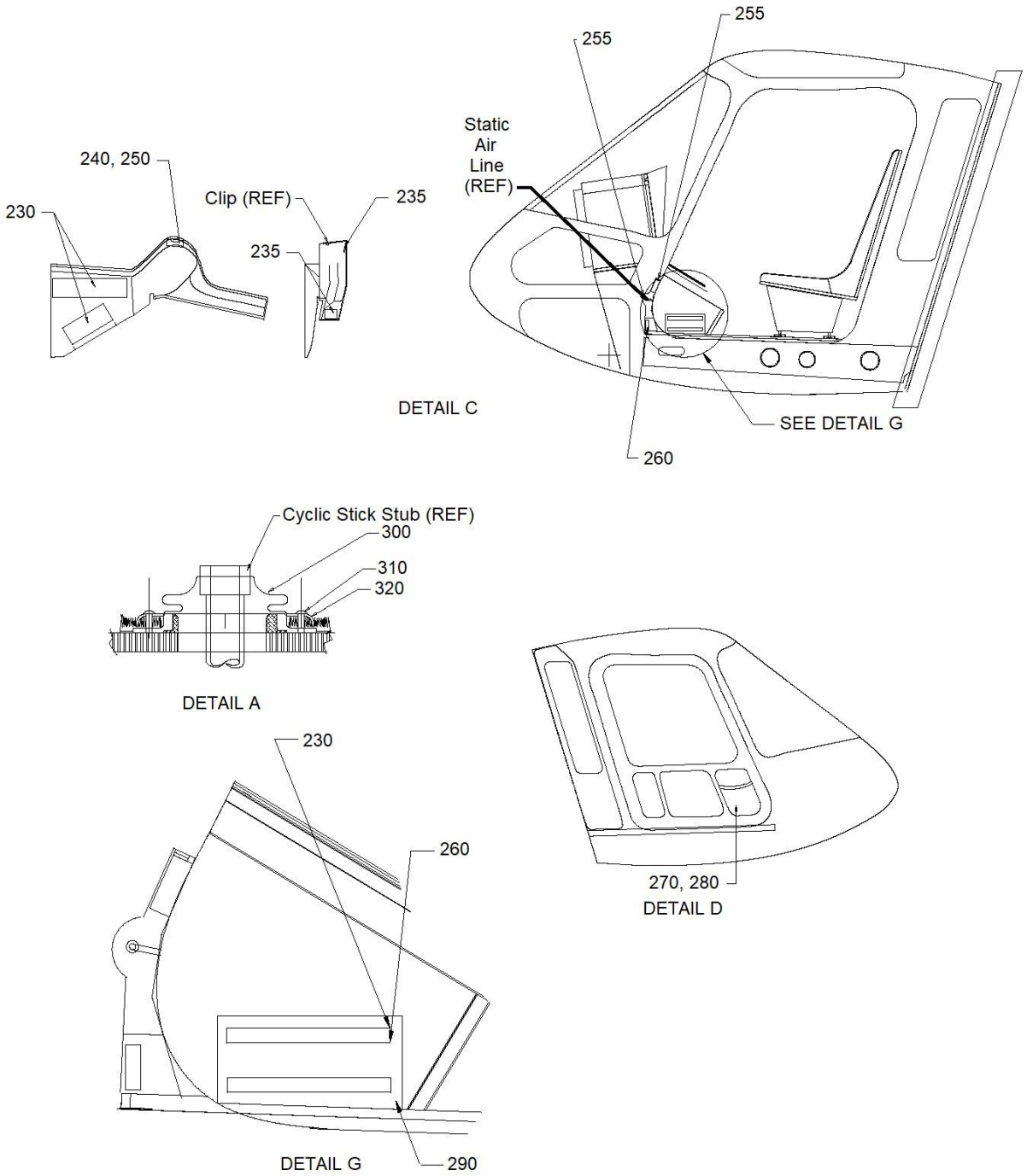

Sheet 2 of 2

FIGURE 3-21. INTERIORS

FIGURE 3-21. INTERIORS

ITEM NUMBER	PART NUMBER	DESCRIPTION	QTY PER ASSY	EFFECTIVITY		
				TH-28	480	480B
–*	4119801-1	480/480B Interiors	REF		X	X
–*	4119801-3	480B Interiors (2+2)	REF			X
–*	4119801-5	480/480B Interiors (Single Controls)	REF		X	X
10	4119891-7	. Angle Shroud (Nose) Installation	1		X	X
–	4119861-1	. Scuff Plate Installation	1		X	X
21	4119804-21	. . Plate (Pilot Side, Outboard)	1		X	X
22	4119804-22	. . Plate (Copilot Side, Outboard)	1		X	X
23	4119804-23	. . Plate (Pilot Side, Inboard)	1		X	X
24	4119804-24	. . Plate (Copilot Side, Inboard	1		X	X
–	MS24694-51	. . Screw	16		X	X
30	4119884-1	. Upholstery Assembly (Aft)	1		X	X
–	4230042-1	. 2+2 Bench Seat Configuration Installation	1			X
–	4119798-1	. Fixed Arm Assembly and Installation, Long	1		X	X
–	4119798-3	. Fixed Arm Assembly and Installation, Short	1		X	X
40	4119870-3	. Collective Shroud Installation	1		X	X
–	4119870-7	. Collective Shroud Installation	1		X	X
50	4119871-7	. Collective Shroud Installation	1		X	X
50	4119871-3	. Torque Tube Shroud Install (Replaced by 4119871-7)	1		X	X
60	4119872-3	. Collective Shroud Installation	1		X	X
70	4115005-1	. Upholstery Inserts Installation (Left Hand)	1		X	X
80	4115005-3	. Upholstery Inserts Installation (Right Hand)	1		X	X
–	4115005-5	. Upholstery Inserts Installation (2+2)	1			X
–	4115005-7	. Upholstery Inserts Installation (2+2)	1			X
–♦	4115005-9	. Upholstery Inserts Installation	1			X
90	4115004-1	. Console Shroud Installation (Alternate)	1		X	X
100	4115004-3	. Console Shroud Installation	1		X	X
–	4220627-3	. Shroud Installation	A/R			X
110	4119841-5	. Removable Footrest Installation	1		X	X
120	4119849-1	. Upholstery Assembly (Left Hand)	1		X	X
130	4119849-3	. Upholstery Assembly (Right Hand)	1		X	X
140	4115013-1	. Backwall Trim	1		X	X
–	4115014-17	. . Closeout Upper Left	1		X	X
–	4115014-18	. . Closeout Upper Right	1		X	X
–	4115014-19	. . Closeout Upper Center	1		X	X
–	4115014-21	. . Closeout Lower Left	1		X	X
–	4115014-22	. . Closeout Lower Right	1		X	X

FIGURE 3-21. INTERIORS

ITEM NUMBER	PART NUMBER	DESCRIPTION	QTY PER ASSY	EFFECTIVITY		
				TH-28	480	480B
150	4199067-1	. Dual US Installation (Mono)	1		X	X
160	4199067-3	. 1/4" US Jack Installation	1		X	X
170	4199067-5	. Dual US Stereo Installation	1		X	X
180	4199067-7	. European Comm System Installation	1		X	X
185	4199067-9	. Bose Comm. Installation with Fuse	1		X	X
190	4199067-101	. Bose Comm. Station Installation	1		X	X
–	4199049-1	. Cover Installation Junction Box	1		X	X
–	4196557-1	. . Angle Assembly	1		X	X
–	AN526-632R6	. . Screw	2		X	X
–	3/8-6R	. . Screw	2		X	X
–	A01784-6Z-1D	. . Tinnerman (with 3/8-6R screw)	2		X	X
–	MS27039-1-08	. . Screw (to floor)	2		X	X
–	NAS1149D0316H	. . Washer	2		X	X
–	AN960D10L	. . Washer (Alternate) (with MS27039-1-08 screw)	2		X	X
200†	4119873-1	. OAT Gauge Installation	1		X	X
210	4115020-1	. VNE Placard Installation	1		X	X
220	4196529-3	. Compass Installation	1		X	X
230	ECD4089-11	. Tape: Velcro	A/R		X	X
235	ECD4089-23	. Hook Velcro	A/R		X	X
240	4119889-1	. Shroud Static Air Line Assy (Left Hand)	A/R		X	X
250	4119889-2	. Shroud Static Air Line Assy (Right Hand)	A/R		X	X
255	ECD4089-25	. Loop Velcro	A/R		X	X
260	ECD4089-15	. Tape: Velcro	1		X	X
270	4119812-1	. Door Pocket Installation (Left Hand)	1		X	X
280	4119812-2	. Door Pocket Installation (Right Hand)	1		X	X
290	ESS-64204	. Shop Ticket Holder	1			X
300	4167521-21	. Boot	2		X	X
310	AN526-832R8	. Screw	8		X	X
320	4167521-19	. Boot Cover	1		X	X

* Install 4167521-11 Cover A/R with MS27031-1-08 screws.

† Not equipped on S/N 5240 and subsequent.

♦ Effectivity 480B S/N 5246 – 5251.

INTENTIONALLY LEFT BLANK

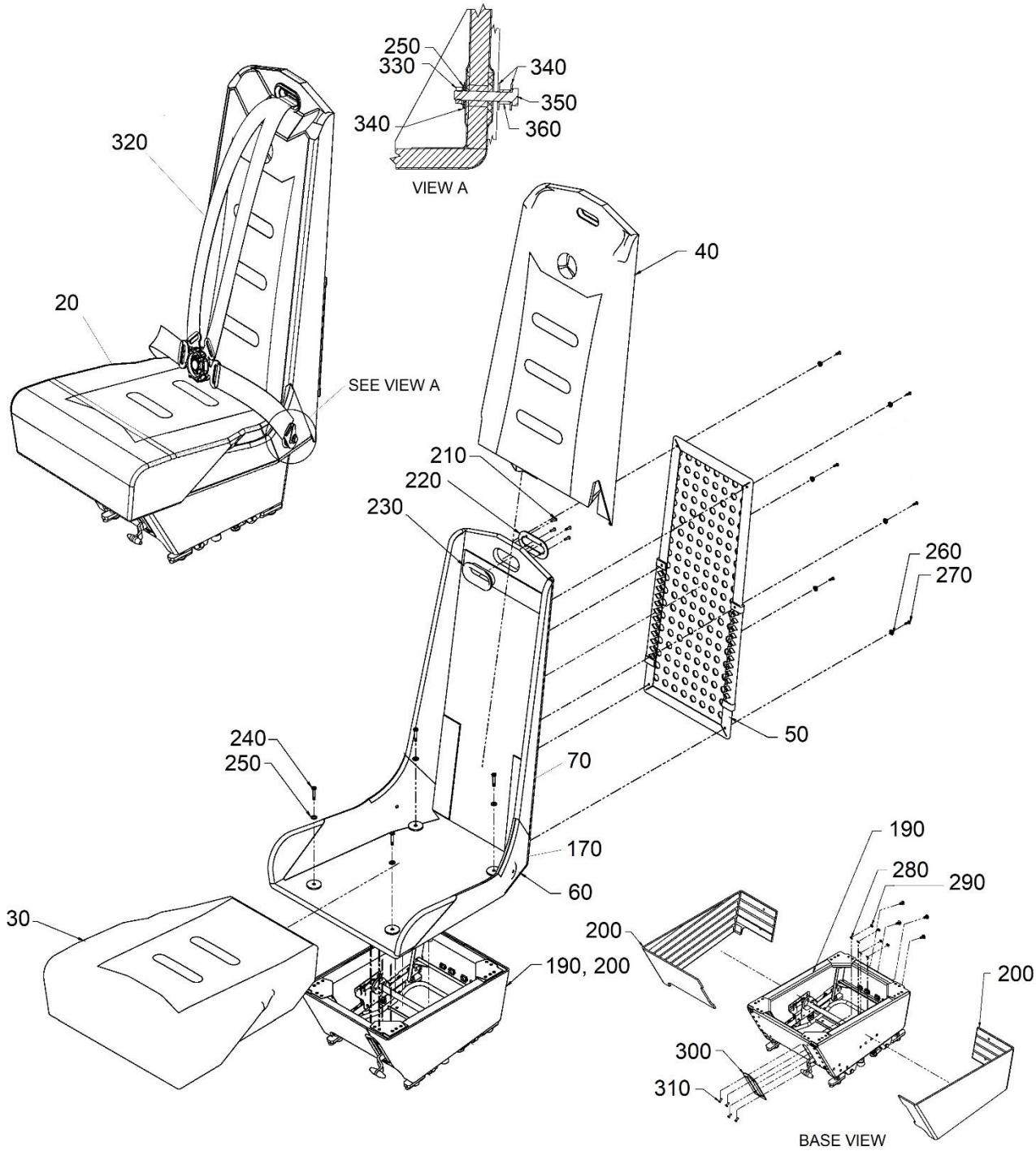

Sheet 1 of 2

FIGURE 3-22. PILOT AND CO-PILOT SEAT ASSEMBLY

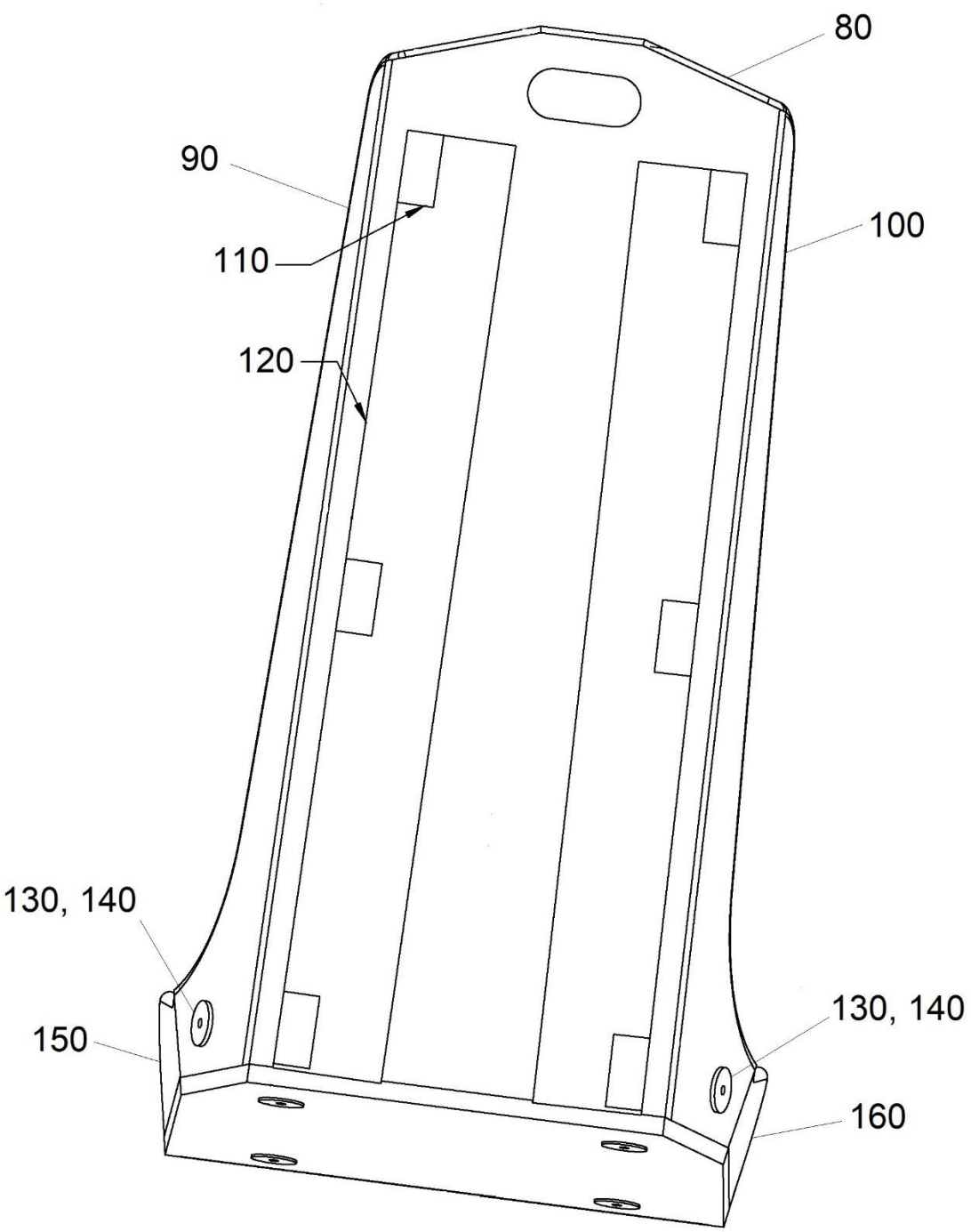

Sheet 2 of 2

FIGURE 3-22. PILOT AND CO-PILOT SEAT ASSEMBLY

FIGURE 3-22. PILOT AND CO-PILOT SEAT ASSEMBLY

ITEM NUMBER	PART NUMBER	DESCRIPTION	QTY PER ASSY	EFFECTIVITY		
				TH-28	480	480B
–	4101501-3	Structural Assembly Complete	REF		X	X
–*	4119760-9	. Pilot Seat Assembly	REF			X
–*	4119760-8	. Co-Pilot Seat Assembly	REF			X
–10	4119849-9	. . Seat Assembly, Pilot	1			X
20	4119849-8	. . Seat Assembly, Co-Pilot	1			X
30	4119871-11-GEN	. . . Crew Seat, Assembly - Bottom	1			X
40	4119871-12-GEN	. . . Crew Seat, Assembly - Backrest	1			X
50	4119874-12-GEN	. . . Cover - Pocket/Back Panel	1			X
60	4119849-7	. . . Pre-Upholstery Fwd Seat	1			X
70	4119762-5	. . . . Bucket Assembly	1			X
80	4119763-23	. . . . . Back	1			X
90	4119763-26	. . . . . Wing	1			X
100	4119763-25	. . . . . Wing	1			X
110	4119762-11	. . . . . Plate	6			X
120	4119762-13	. . . . . Spacer	2			X
130	4119797-13	. . . . . Washer	2			X
140	4119779-15	. . . . . Washer	2			X
150	4119763-30	. . . . . Side	1			X
160	4119763-29	. . . . . Side	1			X
170	4119878-10-GEN	. . . . Crew Seat, Cover	2			X
–	ECD4089-13	. . . . Velcro Hook	28.5”			X
–	ECD4089-11	. . . . Velcro Hook, Black	12”			X
–180	4119761-7	. . . Pilot Tracking Installation	1			X
190	4119761-5	. . . Co-Pilot Tracking Installation	1			X
200	4119771-10-GEN	. . . Shroud Assembly - Pedestal	1			X
210	MS35206-230	. . . Screw	4			X
220	4119765-19	. . . Plate	1			X
230	4119765-17	. . . Flanged Block	1			X
240	NAS6604-13	. . . Bolt	4			X
250	NAS1149F0432P	. . . Washer	6			X
260	601-6	. . . Washer	6			X
270	MS51862-14	. . . Screw	6			X
280	NAS1149FN616P	. . . Washer	4			X
290	MS21083N06	. . . Nut	4			X
300	4119743-11	. . . Plate	1			X
310	MS24693-S27	. . . Screw	4			X
320	ECD4061-1	. . Shoulder Belt	1			X

FIGURE 3-22. PILOT AND CO-PILOT SEAT ASSEMBLY

ITEM NUMBER	PART NUMBER	DESCRIPTION	QTY PER ASSY	EFFECTIVITY		
				TH-28	480	480B
330	MS20364-428	. . Nut	2			X
340	ECD050-11	. . Washer	6			X
350	NAS6604-17	. . Bolt	2			X
360	4119780-23	. . Spacer	2			X
–	NAS6204-5	. . Bolt	2			X
–	NAS1149D0463J	. . Washer	2			X

* Effectivity 480B S/N 5256 and subsequent. Retrofittable 480B S/N 5042 and subsequent.

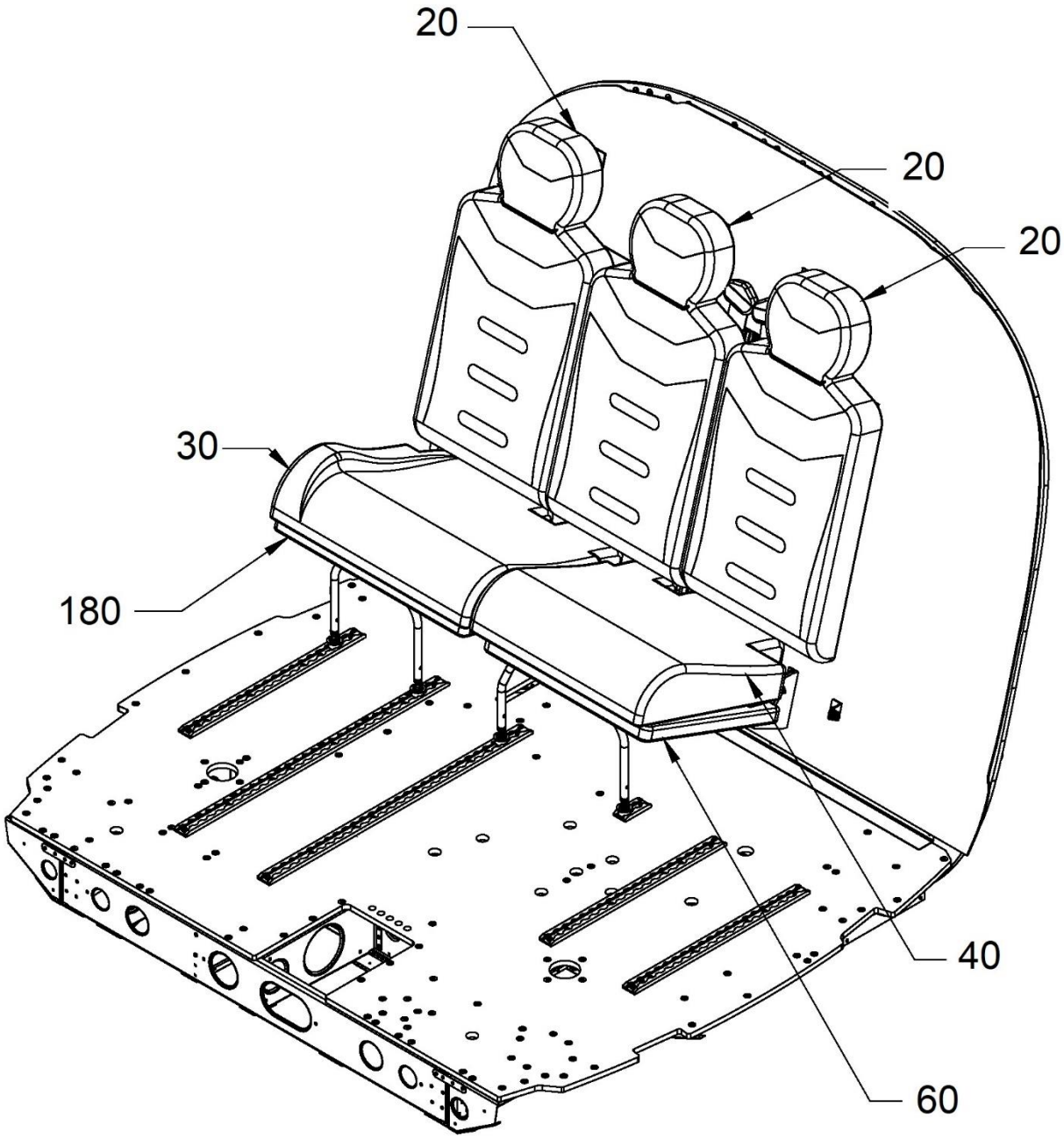

Sheet 1 of 5

FIGURE 3-23. CUSHION COLLECTION AND ARMREST ASSEMBLY

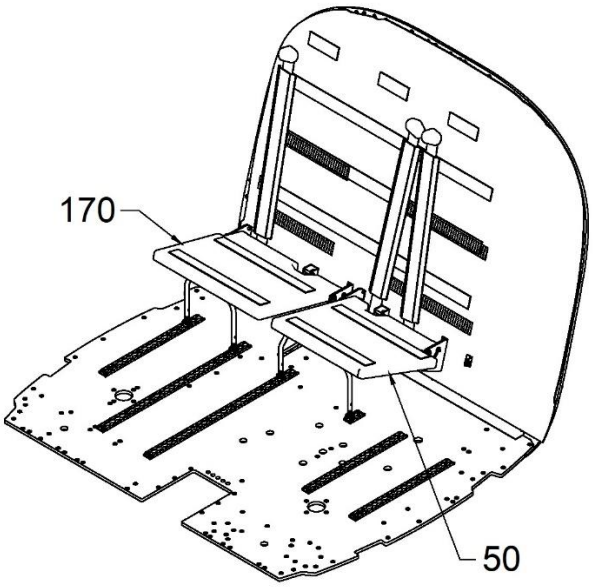

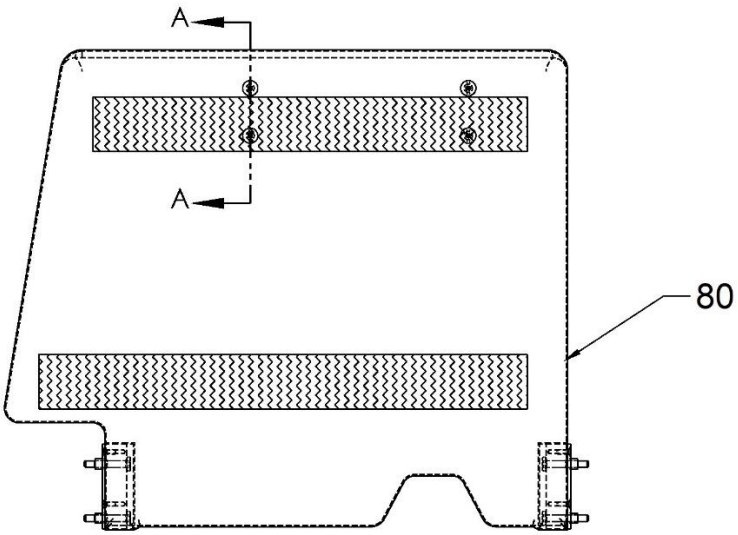

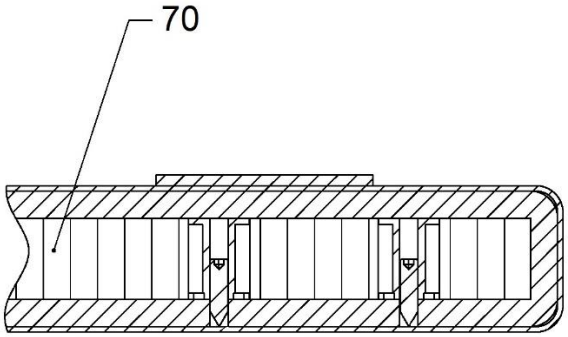

SECTION A-A

Sheet 2 of 5

FIGURE 3-23. CUSHION COLLECTION AND ARMREST ASSEMBLY

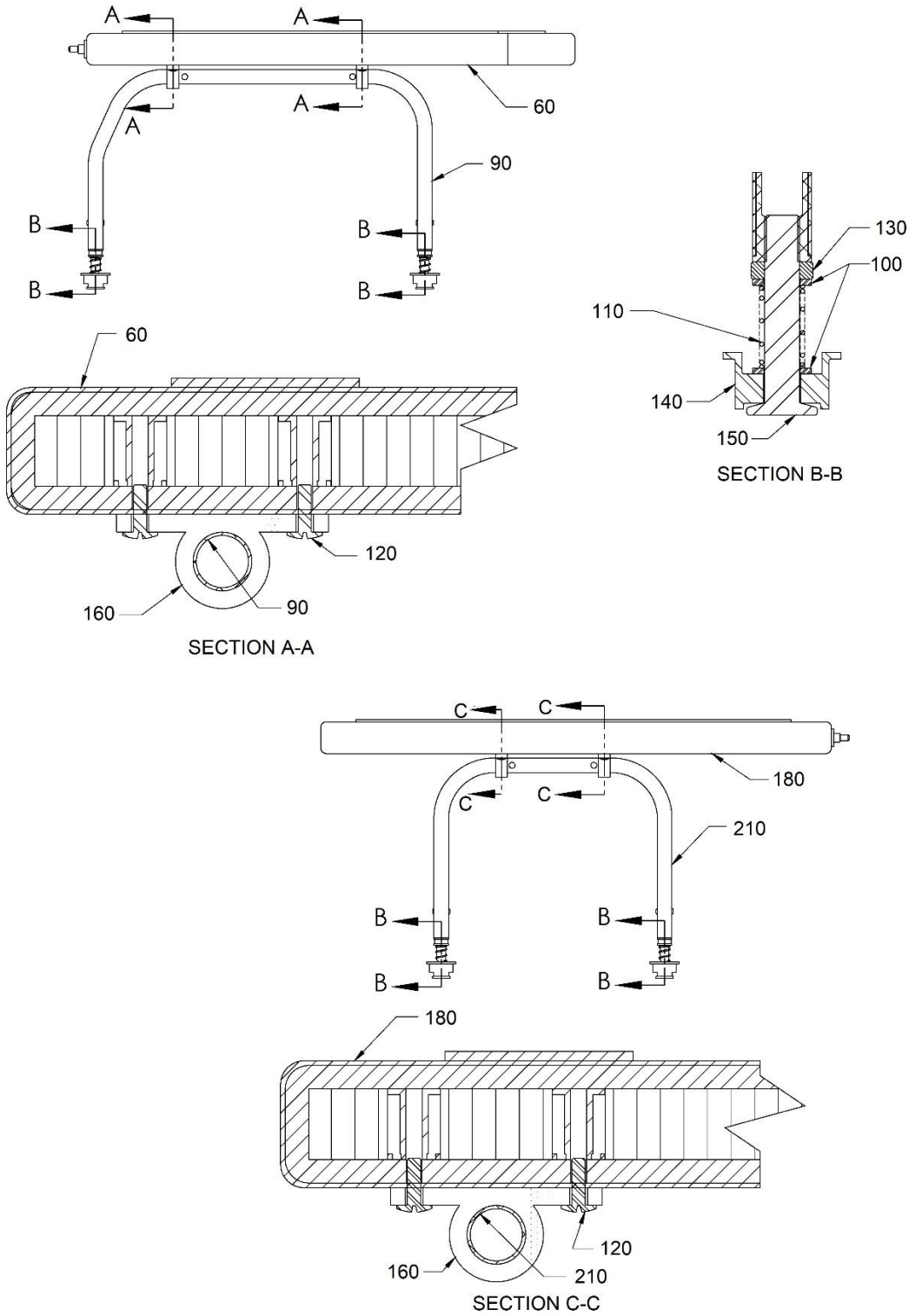

Sheet 3 of 5

FIGURE 3-23. CUSHION COLLECTION AND ARMREST ASSEMBLY

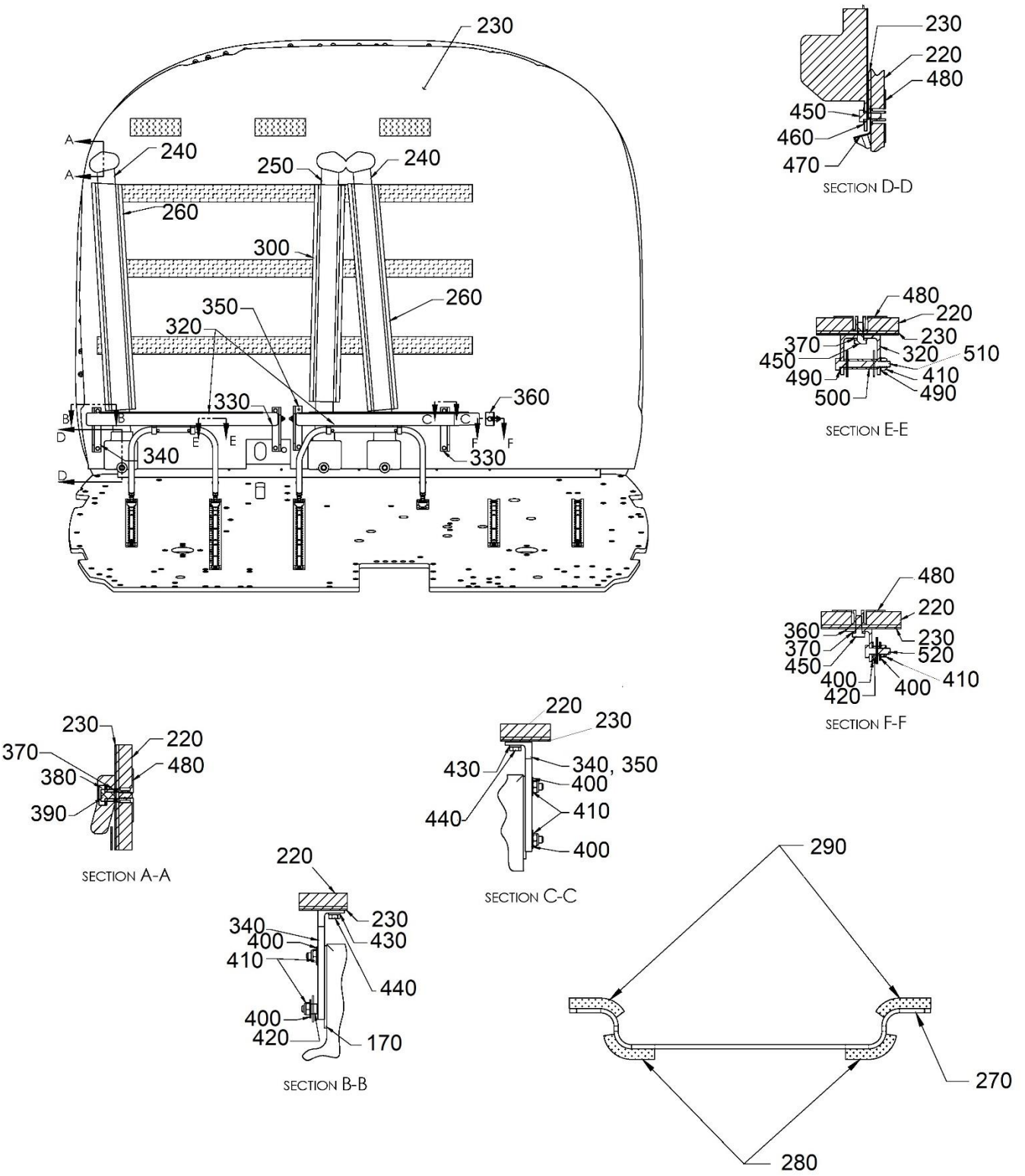

Sheet 4 of 5

FIGURE 3-23. CUSHION COLLECTION AND ARMREST ASSEMBLY

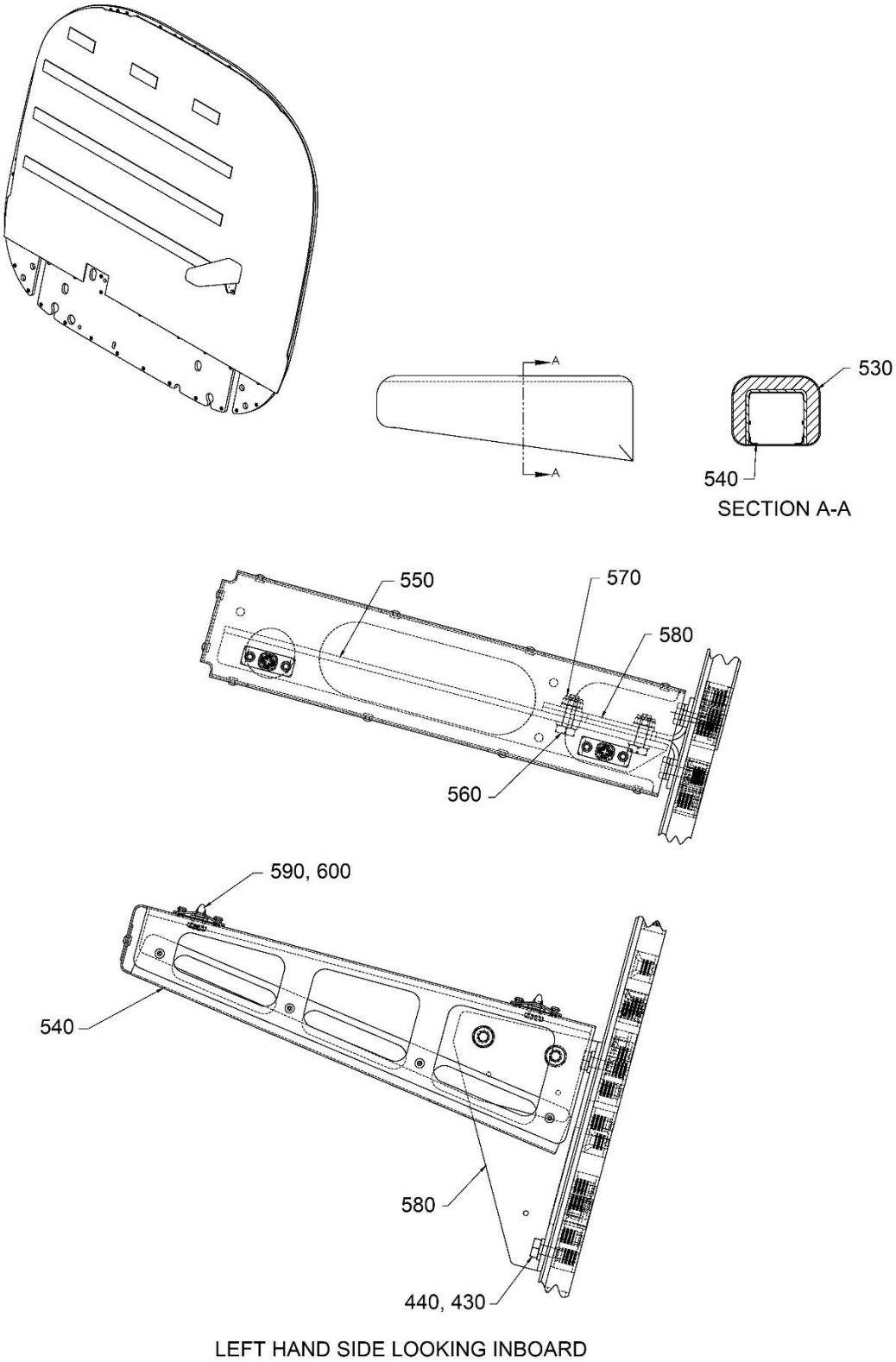

Sheet 5 of 5

FIGURE 3-23. CUSHION COLLECTION AND ARMREST ASSEMBLY

FIGURE 3-23. CUSHION COLLECTION AND ARMREST ASSEMBLY

ITEM NUMBER	PART NUMBER	DESCRIPTION	QTY PER ASSY	EFFECTIVITY		
				TH-28	480	480B
–	4119801-1	Interiors 480/480B	REF		X	X
10*	4119884-5	. Cushion Collection-Aft Bench Seat	1			X
20	4119884-11-GEN	. . Passenger Seat, Cushion - Backrest	3			X
30	4119884-13-GEN	. . Passenger Seat Assembly - Bottom - RH	1			X
40	4119884-15-GEN	. . Passenger Seat Assembly - Bottom - LH	1			X
–	4119775-107	. . Aft Bench Seat Installation	REF			X
50	4119775-109	. . . LH-Aft Bench Seat Assembly	1			X
60	4119884-23	. . . . Upholstered Seat Base	1			X
70	4119786-1	. . . . . Bench Assembly	1			X
80	4119884-17-GEN	. . . . . Passenger Seat, Cover	1			X
90	4119782-3	. . . . Leg Assembly	1			X
100◊	NAS1149F0663P	. . . . Washer	4			X
110◊	C0480-045-0880-S	. . . . Spring	2			X
120◊	AN526-832R8	. . . . Screw	4			X
130◊	AN316-6R	. . . . Nut	2			X
140◊	4119791-15	. . . . Washer	2			X
150◊	331281-34W	. . . . Stud	2			X
160◊	8871T34	. . . . Clamp	2			X
170	4119775-110	. . . RH-Aft Bench Seat Assembly	1			X
180	4119884-24	. . . . Upholstered Seat Base	1			X
–190	4119786-3	. . . . . Bench Assembly	1			X
–200	4119884-19-GEN	. . . . . Passenger Seat, Cover	1			X
210	4119782-1	. . . . Leg Assembly	1			X
220	4114019	. . . Backwall	1			X
230	4119881-5-GEN	. . . Rear Wall Cover	1			X
240●	5-01-095701REV A	. . . Seat Restraint	2			X
250▼	5-01-090701REV A	. . . Seat Restraint	1			X
260	4119742-5	. . . Channel Assembly	2			X
270	4119742-11	. . . . Channel	1			X
280†	ECD4089-23	. . . . Hook Velcro	54”			X
290†	ECD4089-25	. . . . Loop Velcro	54”			X
300	4119742-7	. . . Channel Assembly	1			X
–310	4119742-13	. . . . Channel	1			X
320	4119756-21	. . . Channel	2			X
330	4119781-16	. . . Fitting	2			X
340	4119781-15	. . . Fitting	1			X
350	4119781-17	. . . Fitting	1			X

FIGURE 3-23. CUSHION COLLECTION AND ARMREST ASSEMBLY

ITEM NUMBER	PART NUMBER	DESCRIPTION	QTY PER ASSY	EFFECTIVITY		
				TH-28	480	480B
360	4119756-17	. . . Angle	1			X
370	NAS1149F0463P	. . . Washer	12			X
380	4119799-27	. . . Washer	3			X
390	NAS6604-9	. . . Bolt	3			X
400	1/4 Harper	. . . Washer	10			X
410	MS21083N4	. . . Nut	11			X
420	4119780-25	. . . Spacer	2			X
430	NAS1149F0363P	. . . Washer	16			X
440	NAS66032	. . . Bolt	12			X
450	NAS6604-3	. . . Bolt	6			X
460	4119799-25	. . . Washer	3			X
470	4114008-11	. . . Angle	1			X
480	4119799-19	. . . Washer	1			X
490	NAS1149C0432R	. . . Washer	4			X
500	4119780-29	. . . Spacer	2			X
510	NAS6604-23	. . . Bolt	2			X
520	NAS6604-5	. . . Bolt	1			X
–	4119798-7	. Fixed Arm Assembly and Installation	REF			X
530♦	4119798-1-GEN	. . Armrest Assembly	1			X
540	4119795-1	. . Shroud Assembly	1			X
550	4119796-11	. . Angle	1			X
560	NAS6603-4	. . Bolt	2			X
570	MS21083N3	. . Nut	2			X
580	4119797-1	. . Fitting Assembly	1			X
590	82-19-160-16	. . Oval Head	2			X
600	82-32-101-20	. . Retainer	2			X
–	1357	. . Scotch-Weld	A/R			X

* Effectivity 480B S/N 5256 and subsequent. Retrofittable 480B S/N 5042 and subsequent.

◊ Parts used with 4119775-110.

● 1117067-07 Reel Assembly is a suitable replacement.

▼ 1117067-05 Reel Assembly is a suitable replacement.

† Parts used with 4119742-7.

♦ Assembly to be installed using 1357 Scotch-Weld. Hi-Strength 94 ET Adhesive is an acceptable alternate.

INTENTIONALLY LEFT BLANK

FIGURE 4-1. LANDING GEAR CROSS TUBE INSTALLATION

ITEM NUMBER	PART NUMBER	DESCRIPTION	QTY PER ASSY	EFFECTIVITY		
				TH-28	480	480B
1	4174002-7	. Cross Tube Assembly, Forward	1	X	X	X
2	4174014-11	. . End Fitting	2	X	X	X
3	NAS6604-50	. . Bolt	4	X	X	X
3	AN4-34A	. . Bolt (Superseded by NAS6604-50)	4	X	X	X
4	NAS1149F0463P	. . Washer	8	X	X	X
4	AN960-416	. . Washer (Alternate)	8	X	X	X
5	MS21083N4	. . Nut	4	X	X	X
5	AN364-428A	. . Nut (Superseded by MS21083N4)	4	X	X	X
6	4174013-903	. . Pivot Clamp	2	X	X	X
7	NAS6605-52	. . Bolt	2	X	X	X
7	AN5-35A	. . Bolt (Superseded by NAS6605-52)	2	X	X	X
8	NAS1149F0563P	. . Washer	4	X	X	X
8	AN960-516	. . Washer (Alternate)	4	X	X	X
9	MS21044N5	. . Nut	2	X	X	X
9	AN365-524A	. . Nut (Superseded by MS21044N5)	2	X	X	X
10	NAS6604-17	. . Bolt	2	X	X	X
10	AN4-14A	. . Bolt (Superseded by NAS6604-17)	2	X	X	X
11	NAS1149F0432P	. . Washer	4	X	X	X
11	AN960-416L	. . Washer (Alternate)	4	X	X	X
12	MS21044N4	. . Nut	2	X	X	X
12	AN365-428A	. . Nut (Superseded by MS21044N4)	2	X	X	X
13	NAS6206-58	. Bolt	2	X	X	X
14	NAS1149F0663P	. Washer	10	X	X	X
14	AN960-616	. Washer (Alternate)	10	X	X	X
15	NAS77-6-012	. Bushing	2	X	X	X
16	NAS75-6-010	. Bushing	2	X	X	X
17*	4118892-11	. Shim Bushing	2		X	
18	MS21042-6	. Nut	2	X	X	X
19	4174002-9	. Cross Tube Assembly, Aft	1	X	X	X
20	4174014-11	. . End Fitting	2	X	X	X
21	NAS6604-56	. . Bolt	2	X	X	X
21	AN4-37A	. . Bolt (Superseded by NAS6604-56)	2	X	X	X
22	NAS1149F0463P	. . Washer	10	X	X	X
22	AN960-416	. . Washer (Alternate)	10	X	X	X
23	MS21083N4	. . Nut	4	X	X	X
23	AN364-428A	. . Nut (Superseded by MS21083N4)	4	X	X	X
24	NAS6604-50	. . Bolt	2	X	X	X
24	AN4-34A	. . Bolt (Superseded by NAS6604-50)	2	X	X	X

FIGURE 4-1. LANDING GEAR CROSS TUBE INSTALLATION

ITEM NUMBER	PART NUMBER	DESCRIPTION	QTY PER ASSY	EFFECTIVITY		
				TH-28	480	480B
25	4174013-903	. . Pivot Clamp	2	X	X	X
26	NAS6605-52	. . Bolt	2	X	X	X
26	AN5-35A	. . Bolt (Superseded by NAS6605-52)	2	X	X	X
26	AN5-37A	. . Bolt (Replaced by AN5-35A)	2	X	X	X
27	NAS1149F0563P	. . Washer	8	X	X	X
27	AN960-516	. . Washer (Alternate)	8	X	X	X
28	MS21044N5	. . Nut	4	X	X	X
28	AN365-524A	. . Nut (Superseded by MS21044N5)	4	X	X	X
29	NAS6604-17	. . Bolt	4	X	X	X
29	AN4-14A	. . Bolt (Superseded by NAS6604-17)	4	X	X	X
30	NAS1149F0432P	. . Washer	8	X	X	X
30	AN960-416L	. . Washer (Alternate)	8	X	X	X
31	MS21044N4	. . Nut	4	X	X	X
31	AN365-428A	. . Nut (Superseded by MS21044N4)	4	X	X	X
32	28-17101-7	. . Clamp Weldment-Skid Gear	2	X	X	X
32	28-17101-1	. . Gear Clamp (Superseded by 28-17101-7)	2	X	X	X
33	NAS6605-56	. . Bolt	2	X	X	X
33	AN5-37A	. . Bolt (Superseded by NAS6605-56)	2	X	X	X
34	28-17150-1	. Bolt	2	X	X	X
35	MS21083N6	. Nut	2	X	X	X
35	AN364-624A	. Nut (Superseded by MS21083N6)	2	X	X	X

** Only used with 480, S/N 5007 - 5011.

INTENTIONALLY LEFT BLANK

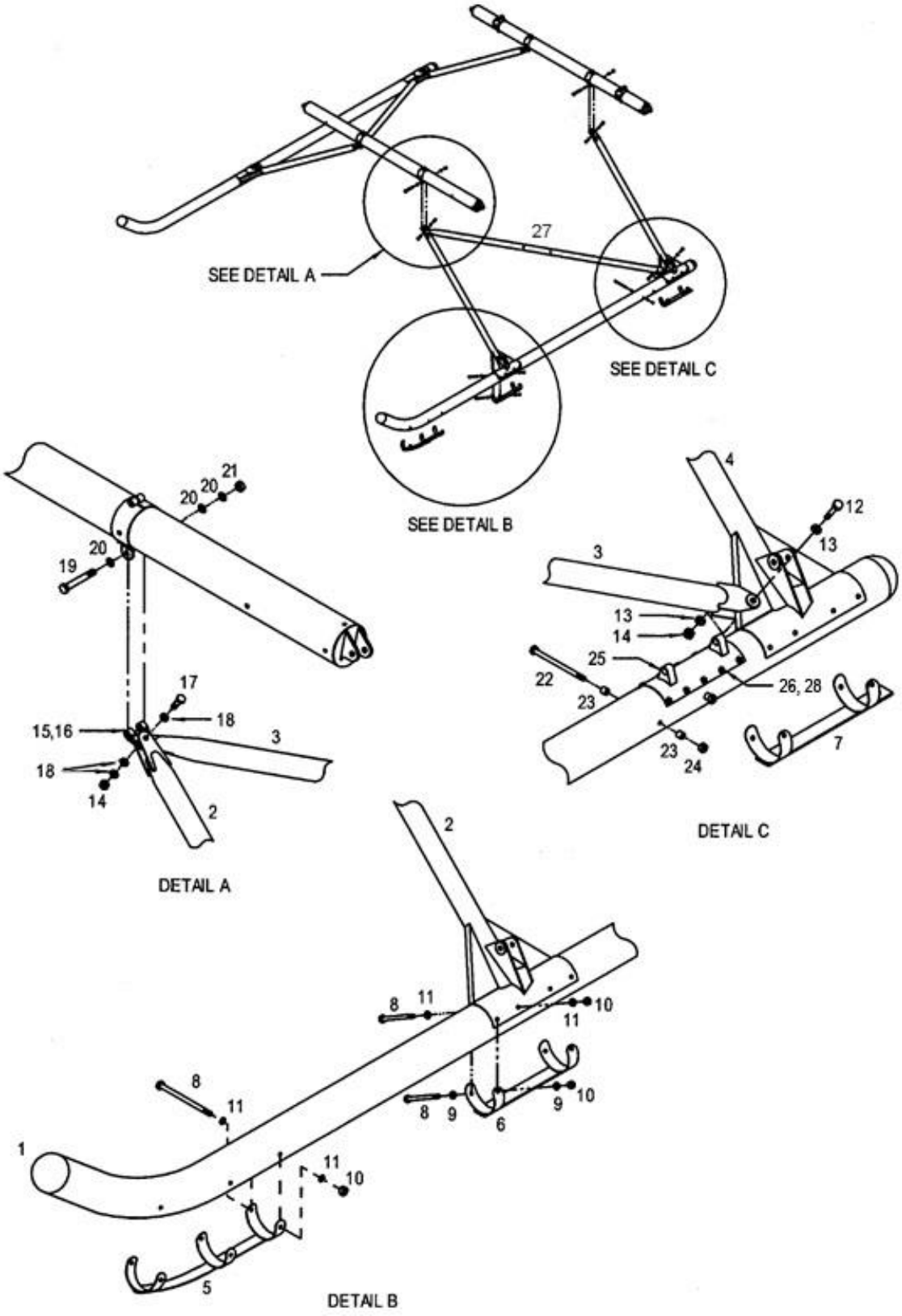

FIGURE 4-2. LANDING GEAR ASSEMBLY AND INSTALLATION

FIGURE 4-2. LANDING GEAR ASSEMBLY AND INSTALLATION

ITEM NUMBER	PART NUMBER	DESCRIPTION	QTY PER ASSY	EFFECTIVITY		
				TH-28	480	480B
1	4174003-1	. Skid, Gear, Assy W/End Caps	2	X	X	
–	4174008-11	. . End Cap	2	X	X	
–	MS51861-35	. . Screw	2	X	X	
–	AN530-8R8	. . Screw (Superseded by MS51861-35)	2	X	X	
1**	4174003-3	. Skid, Gear, Assy W/End Caps	2	X	X	X
– ●	4174008-17	. . End Cap	2	X	X	X
– ±	4174008-15	. . End Cap (Superseded by 4174008-17)	2	X	X	X
–	4174008-11	. . End Cap (Superseded by 4174008-15)	2	X	X	X
–	MS51861-24	. . Screw	2	X	X	X
–	AN530-6R6	. . Screw (Superseded by MS51861-24)	2	X	X	X
–▶▶	6X3/8	. . Screw	2			X
2	4174001-101	. Leg, Landing Gear, Left Hand, Forward	1	X	X	X
2	4174001-102	. Leg, Landing Gear, Right Hand, Forward	1	X	X	X
3▶	4174001-107	. Drag Strut	2	X	X	X
3	4174001-105	. Drag Strut (Superseded by 4174001-107)	2	X	X	X
4	4174001-103	. Leg, Landing Gear, Left Hand, Aft	1	X	X	X
4	4174001-104	. Leg, Landing Gear, Right Hand, Aft	1	X	X	X
5	4174009-13	. Wear Plate	2	X	X	X
6	4174007-5	. Wear Plate	2	X	X	X
6†	4220132-1	. Wear Plate, Heavy Duty	2		X	X
7	4174007-8	. Wear Plate, Left Hand	1	X	X	X
7	4174007-7	. Wear Plate, Right Hand	1	X	X	X
7†	4220132-1	. Wear Plate, Heavy Duty	2		X	X
8	NAS6604-48	. Bolt	22	X	X	X
8	AN4-33A	. Bolt (Superseded by NAS6604-48)	22	X	X	X
9‡	NAS1149F0432P	. Washer	16	X	X	X
9	AN960-416L	. Washer (Superseded by NAS1149F0432P)	28	X	X	X
10‡	MS21044N4	. Nut	22	X	X	X
10	AN365-428A	. Nut (Superseded by MS21044N4)	22	X	X	X
11‡	NAS1149F0463P	. Washer	28	X	X	X
11	AN960-416	. Washer (Superseded by NAS1149F0463P)	16	X	X	X
12	NAS6605-19	. Bolt	2	X	X	X
12	AN5-15A	. Bolt (Superseded by NAS6605-19)	2	X	X	X
13‡	NAS1149F0563P	. Washer	4	X	X	X
13	AN960-516	. Washer (Superseded by NAS1149F0563P)	4	X	X	X
14‡	MS21044N5	. Nut	8	X	X	X
14	AN365-524A	. Nut (Superseded by MS21044N5)	6	X	X	X
15	4174012-11	. Leg Fitting	4	X	X	X

FIGURE 4-2. LANDING GEAR ASSEMBLY AND INSTALLATION

ITEM NUMBER	PART NUMBER	DESCRIPTION	QTY PER ASSY	EFFECTIVITY		
				TH-28	480	480B
16	4174012-13	. Clamp-up Bushing	4	X	X	X
17	AN5-13A	. Bolt	4	X	X	X
17	AN5-12A	. Bolt (Superseded by AN5-13A)	4	X	X	X
18‡	NAS1149F0563P	. Washer	12	X	X	X
18	AN960-516L	. Washer (Superseded by NAS1149F0563P)	12	X	X	X
19	NAS6606-29	. Bolt	4	X	X	X
19	AN6-23A	. Bolt (Superseded by NAS6606-29)	4	X	X	X
20‡	NAS1149F0663P	. Washer	12	X	X	X
20	AN960-616L	. Washer (Superseded by NAS1149F0663P)	12	X	X	X
21‡	MS21083N6	. Nut	4	X	X	X
21	AN365-624A	. Nut (Superseded by MS21083N6)	4	X	X	X
22*	NAS6604-56	. Bolt	4	X	X	
22*	AN4-37A	. Bolt (Superseded by NAS6604-56)	4	X	X	
23*	28-16348-1	. Spacer	8	X	X	
24*	MS21083N4	. Nut	4	X	X	
24*	AN364-428A	. Nut (Superseded by MS21083N4)	4	X	X	
25	ECD4057-15	. Saddle, Ground Handling Wheel	2	X	X	X
25	ECD4057-13	. Saddle, Ground Handling Wheel (Obsolete)	2	X	X	X
25	ECD4057-11	. Saddle, Ground Handling Wheel (Obsolete)	2	X	X	X
25*	WC400-00	. Saddle, Ground Handling Wheel (Superseded by ECD4057-15)	2	X	X	
–	4174004-1	. Nut Plate Strip Assembly (Used with P/N ECD4057)	2	X	X	X
– Δ	4174004-3	. Nut Plate Strip Assembly	2	X	X	X
26	NAS6603-4	. Bolt	20		X	X
26	AN3-5A	. Bolt (Superseded by NAS6603-4)	20		X	X
26ΔΔ	CR3213-6-3	. Rivet (Inactive)	20	X	X	X
27	28-17164-11	. Placard: No Step	2	X	X	X
28	NAS1149F0332P	. Washer	20		X	X
28	AN960-10L	. Washer (Superseded by NAS1149F0332P)	20		X	X

* Used on early production TH-28/480 aircraft.

** Effectivity 480B S/N 5042 and subsequent.

† Effectivity 480/480B S/N 5146 and subsequent.

± Effectivity 480B S/N 5148 and subsequent.

●	Effectivity 480B S/N 5155 and subsequent. Eligibility 480 S/N 5001, 480B S/N 5042 and subsequent.
‡	Effectivity 480B S/N 5196 and subsequent. Eligibility 480 S/N 5001, 480B S/N 5042 and subsequent.
Δ	Used to support a field replacement for saddle configuration with 1.30” spaced bolt holes.
ΔΔ	Used with WC400-00, ECD4057-11, and ECD4057-13 only. Not supported.
▶	Effectivity 480B S/N 5252 and subsequent; Eligibility 480 S/N 5001, 480B S/N 5042 and subsequent.
▌ ▶▶	Effectivity 480B S/N 5255 and subsequent: Eligibility 480B S/N 5042 and subsequent.

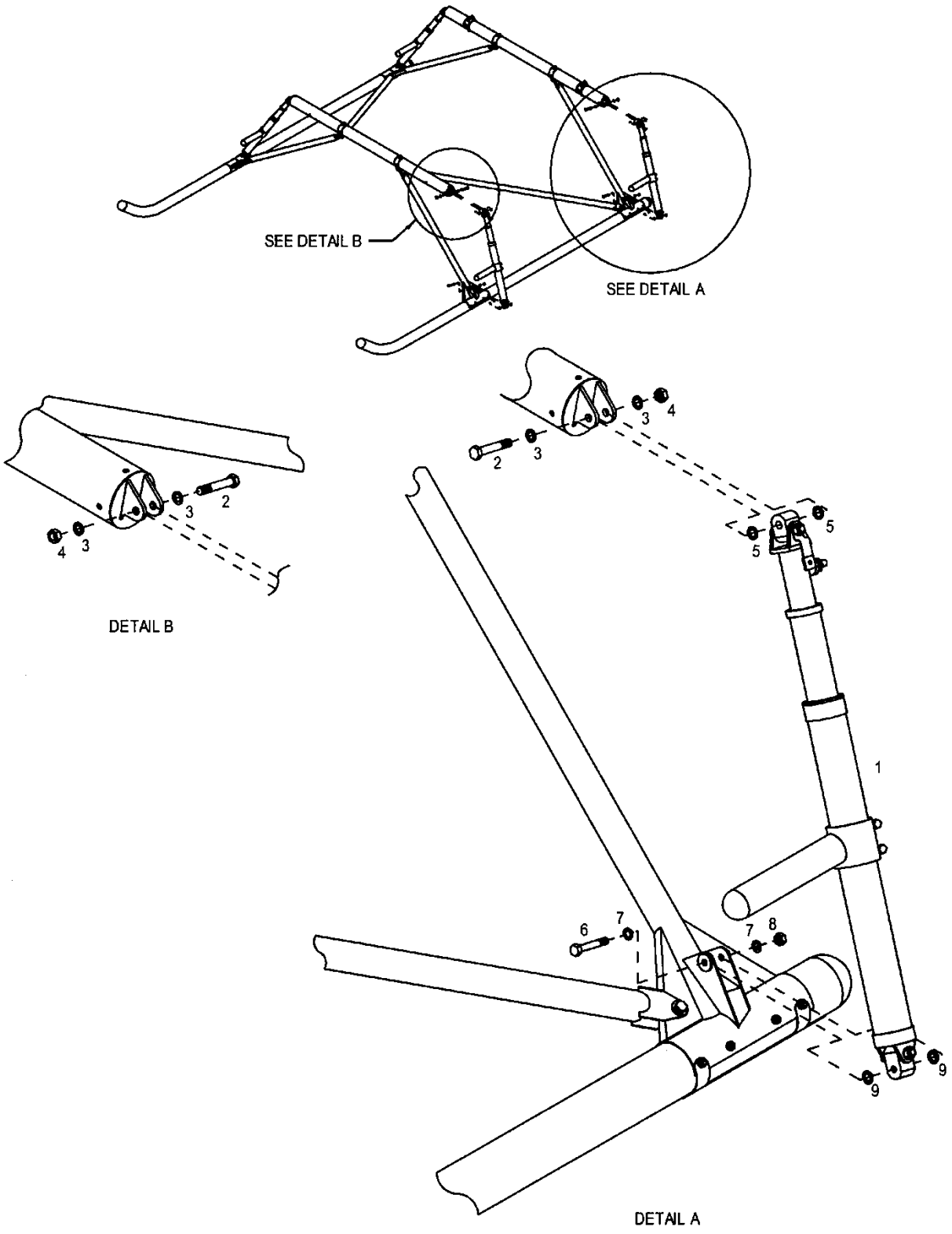

FIGURE 4-3. LANDING GEAR OLEO INSTALLATION

FIGURE 4-4. OLEO ASSEMBLY

ITEM NUMBER	PART NUMBER	DESCRIPTION	QTY PER ASSY	EFFECTIVITY		
				TH-28	480	480B
–	4174501-904	. Oleo and Step Assembly, R/H	1	X	X	X
–	4174501-905	. Oleo and Step Assembly, L/H	1	X	X	X
–‡	4174501-4	. . Oleo Assembly, R/H (Includes step)	1	X	X	X
–‡	4174501-5	. . Oleo Assembly, L/H (Includes step)	1	X	X	X
–	28-17147-7	. . . Piston Shaft and Guide Assembly	1	X	X	X
1	28-17146-7	. . . . Piston Shaft	1	X	X	X
1	28-17146-907	. . . . Piston Shaft (Superseded by 28-17146-7)	1	X	X	X
2*	28-17144-5	. . . . Seal Housing Assembly	1	X	X	X
2	28-17144-1	. . . . Seal Housing Assembly (Superseded by 28-17144-5)	1	X	X	X
3	D1250	. . . . . Wiper	1	X	X	X
4	8-218-N300-9	. . . . Back-Up Ring	1	X	X	X
5	2-218	. . . . O-Ring (N304-75 Material)	1	X	X	X
5	MS28775-218	. . . . O-Ring (Alternate)	1	X	X	X
6	28-17149-1	. . . . Spacer	1	X	X	X
7	28-17151-1	. . . . Rebound Ring	5	X	X	X
8	28-17145-1	. . . . Piston	1	X	X	X
9	28-17157-1	. . . . Valve Shaft	2	X	X	X
10†	28-17156-3	. . . . Piston Valve	4	X	X	X
10	28-17156-1	. . . . Piston Valve (Superseded by 28-17156-3)	4	X	X	X
11	28-17155-1	. . . . Spring	2	X	X	X
12	NAS1149FN632P	. . . . Washer	2	X	X	X
12	AN960-6	. . . . Washer (Alternate)	2	X	X	X
13	MS21044N06	. . . . Nut	2	X	X	X
13	AN365-632A	. . . . Nut (Superseded by MS21044N06)	2	X	X	X
14	28-17147-3	. . . . Pin	1	X	X	X
15**	MS28775-131	. . . O-Ring	1	X	X	X
15	2-131	. . . O-Ring (Superseded by MS28775-131)	1	X	X	X
16	4174501-901	. . . Cylinder Assembly	1	X	X	X
17**	4174016-101	. . . Step Assembly	1	X	X	X
17	4174016-7	. . . Step Assembly (Superseded by 4174016-101)	1	X	X	X
18	NAS6603-12	. . . Bolt	2	X	X	X
18	AN3-11A	. . . Bolt (Superseded by NAS6603-12)	2	X	X	X
19	NAS1149F0332P	. . . Washer	4	X	X	X

FIGURE 4-4. OLEO ASSEMBLY

ITEM NUMBER	PART NUMBER	DESCRIPTION	QTY PER ASSY	EFFECTIVITY		
				TH-28	480	480B
19	AN960-10L	. . . Washer (Alternate)	4	X	X	X
20	MS21044N3	. . . Nut	2	X	X	X
20	AN365-1032A	. . . Nut (Superseded by MS21044N3)	2	X	X	X
21**	CR3212-4-03	. . . Rivet	2	X	X	X
21	CR3213-4-03	. . . Rivet (Superseded by CR3212-4-03)	2	X	X	X
22**	28-17123-11	. . . Universal Link	1	X	X	X
22	28-17123-1	. . . Universal Link (Superseded by 28-17123-11)	1	X	X	X
23	NAS1149F0532P	. . . Washer	7	X	X	X
23	AN960-516L	. . . Washer (Alternate)	7	X	X	X
24	NAS6605-21	. . . Bolt	1	X	X	X
24	AN5-16A	. . . Bolt (Superseded by NAS6605-21)	1	X	X	X
25	MS21044N5	. . . Nut	1	X	X	X
25	AN365-524A	. . . Nut (Superseded by MS21044N5)	1	X	X	X
26	4174015-11	. . . Universal Link	1	X	X	X
27	4174027-11	. . . Cap Screw	1	X	X	X
28	MS21083N5	. . . Nut	1	X	X	X
28	AN364-524A	. . . Nut (Superseded by MS21083N5)	1	X	X	X
29	MS28889-2	. . . Valve Assembly	1	X	X	X
–	MS20813-1	. . . . Cap	1	X	X	X
30	2-015	. . . . O-Ring (N304-75 Material)	1	X	X	X
30	MS28775-015	. . . . O-Ring (Alternate)	1	X	X	X
31	4174020-15	. . Clip	1	X	X	X
32 ≡	A01789-8Z-1D	. . Nut, Tinnerman	1	X	X	X

* Effectivity from S/N 5056 and subsequent.

** Effectivity for 480B S/N 5143 and subsequent.

≡ See Appendix A for equivalent part information.

† Effectivity for TH-28 S/N 3003 and subsequent; 480/480B S/N 5001 and subsequent.

‡ Customers may also purchase 4174501-910 Turbine Oleo Maintenance Kit.

FIGURE 4-5. LANDING GEAR FAIRING INSTALLATION

ITEM NUMBER	PART NUMBER	DESCRIPTION	QTY PER ASSY	EFFECTIVITY		
				TH-28	480	480B
1	4174019-7	. Fairing, Gear Leg, Left Forward	1	X	X	X
–	4174019-17	. Landing Gear Fairing L/H Fwd	1			X
–▼	NAS1922-0175-3	. . Clamp	1			X
–**	NAS1922-0150-3	. . Clamp (Superseded by NAS1922-0175-3)	1	X	X	X
–	20020S	. . Clamp (Superseded by NAS1922-0150-3)	1	X	X	X
–	MS20470AD3-3	. . Rivet	11	X	X	X
–	4174020-13	. . Clip	2	X	X	X
2	4174019-8	. Fairing, Gear Leg, Right Forward	1	X	X	X
–	4174019-18	. . Landing Gear Fairing R/H Fwd	1			X
–▼	NAS1922-0175-3	. . Clamp	1			X
–**	NAS1922-0150-3	. . Clamp (Superseded by NAS1922-0175-3)	1	X	X	X
–	20020S	. . Clamp (Superseded by NAS1922-0150-3)	1	X	X	X
–	MS20470AD3-3	. . Rivet	11	X	X	X
–	4174020-13	. . Clip	2	X	X	X
3	4174019-9	. Fairing, Gear Leg, Left Aft	1	X	X	X
–	4174019-19	. . Landing Gear Fairing L/H Aft	1			X
–▼	NAS1922-0175-3	. . Clamp	1			X
–**	NAS1922-0150-3	. . Clamp (Superseded by NAS1922-0175-3)	1	X	X	X
–	20020S	. . Clamp (Superseded by NAS1922-0150-3)	1	X	X	X
–	MS20470AD3-3	. . Rivet	12	X	X	X
–	4174020-13	. . Clip	2	X	X	X
4	4174019-102	. Fairing, Gear Leg, Right Aft	1	X	X	X
–	4174019-20	. Landing Gear Fairing R/H Aft	1			X
–▼	NAS1922-0175-3	. . Clamp	1			X
–**	NAS1922-0150-3	. . Clamp (Superseded by NAS1922-0175-3)	1	X	X	X
–	20020S	. . Clamp (Superseded by NAS1922-0150-3)	1	X	X	X
–	MS20470AD3-3	. . Rivet	16	X	X	X
–	4174020-13	. . Clip	2	X	X	X
5	4174019-1	. Fairing, Oleo, Left Side	2	X	X	X
–▼	NAS1922-0175-3	. . Clamp	1			X
–**	NAS1922-0150-3	. . Clamp (Superseded by NAS1922-0175-3)	1	X	X	X
–	20020S	. . Clamp (Superseded by NAS1922-0150-3)	1	X	X	X
–	MS21078-08K	. . Nut Plate	1	X	X	X
–	NAS1024N08K	. . Nut Plate (Superseded by MS21078-08K)	1	X	X	X
–≡	A06195-8Z-1D	. . Nut, Tinnerman	5	X	X	X

FIGURE 4-5. LANDING GEAR FAIRING INSTALLATION

ITEM NUMBER	PART NUMBER	DESCRIPTION	QTY PER ASSY	EFFECTIVITY		
				TH-28	480	480B
–	CCR264SS-3-02	. . Rivet	12	X	X	X
–	CCR-264-SS-3-2	. . Rivet (Superseded by CCR264SS-3-02)	12	X	X	X
–	4174020-11	. . Clip	2	X	X	X
6	4174019-2	. Fairing, Oleo, Right Side	2	X	X	X
–	4174019-12	. . Landing Gear Fairing R/H	1			X
–▼	NAS1922-0175-3	. . Clamp	1			X
–**	NAS1922-0150-3	. . Clamp (Superseded by NAS1922-0175-3)	1	X	X	X
–	20020S	. . Clamp (Superseded by NAS1922-0150-3)	1	X	X	X
–	MS21078-08K	. . Nut Plate	1	X	X	X
–	NAS1024N08K	. . Nut Plate (Superseded by MS21078-08K)	1	X	X	X
– ≡	A06195-8Z-1D	. . Nut, Tinnerman	5	X	X	X
–	CCR264SS-3-02	. . Rivet	12	X	X	X
–	CCR-264-SS-3-2	. . Rivet (Superseded by CCR264SS-3-02)	12	X	X	X
–	4174020-11	. . Clip	2	X	X	X
7	4174019-3	. Fairing, Oleo, Upper Left Side Forward	1	X	X	X
–	4174019-13	. . Landing Gear Fairing L/H Fwd	1			X
–	A06195-8Z-1D	. . Nut, Tinnerman	1	X	X	X
–	CCR264SS-3-02	. . Rivet	2	X	X	X
8	4174019-4	. Fairing, Oleo, Upper Right Side Forward	1	X	X	X
–	4174019-14	. . Landing Gear Fairing R/H Fwd	1			X
–	A06195-8Z-1D	. . Nut, Tinnerman	1	X	X	X
–	CCR264SS-3-02	. . Rivet	2	X	X	X
9	4174019-101	. Fairing, Oleo, Upper Left Side Aft	1	X	X	X
–	4174019-21	. Landing Gear Fairing L/H Aft	1			X
– ≡	A01789-8Z-1D	. . Nut, Tinnerman	2	X	X	X
–	A06195-8Z-1D	. . Nut, Tinnerman	1	X	X	X
–	CCR264SS-3-02	. . Rivet	2	X	X	X
10	4174019-104	. Fairing, Oleo, Upper Right Side Aft	1	X	X	X
–	4174019-22	. Landing Gear Fairing R/H Aft	1			X
– ≡	A01789-8Z-1D	. . Nut, Tinnerman	2	X	X	X
–	A06195-8Z-1D	. . Nut, Tinnerman	1	X	X	X
–	CCR264SS-3-02	. . Rivet	2	X	X	X
11	4174022-11	. Closeout, Left Side	1	X	X	X
12	4174022-12	. Closeout, Right Side	1	X	X	X
13	AN525-8R7	. Screw	6	X	X	X

FIGURE 4-5. LANDING GEAR FAIRING INSTALLATION

ITEM NUMBER	PART NUMBER	DESCRIPTION	QTY PER ASSY	EFFECTIVITY		
				TH-28	480	480B
14	S8P-150	. PlusNut	6	X	X	X
15	MS35333-40	. Lock Washer	6	X	X	X
15	AN936-A416	. Lock Washer (Alternate)	6	X	X	X
16	4174021-11	. Closeout, Left Side	1	X	X	X
17	4174021-12	. Closeout, Right Side	1	X	X	X
18≡	6 X1/2	. Screw, Self Tapping	4	X	X	X
19	MS24693-S49	. Screw	4	X	X	X
19	AN507-832R7	. Screw (Superseded by MS24693-S49)	4	X	X	X
20	8X1/2	. Screw, Self Tapping	24	X	X	X
21*	4174024-11	. Support	2	X	X	
22	BPF-3/4	. Plug	1	X	X	X
23	5451	. Tape	A/R	X	X	X
24	Y9485	. Tape	A/R	X	X	X
25	4174034-11	. Indicator Placard	4	X	X	X
26	5480	. Tape	A/R	X	X	X

* Used on TH-28, S/N 3004-3006, and 480, S/N 5001-5024.

≡ See Appendix A for equivalent part information.

** Effectivity 480B S/N 5207 and subsequent. Retrofittable to 480 S/N 5001, 480B S/N 5042 and subsequent.

▼ Effectivity 480B S/N 5255 and subsequent. Retrofittable to 480B S/N 5042 and subsequent.

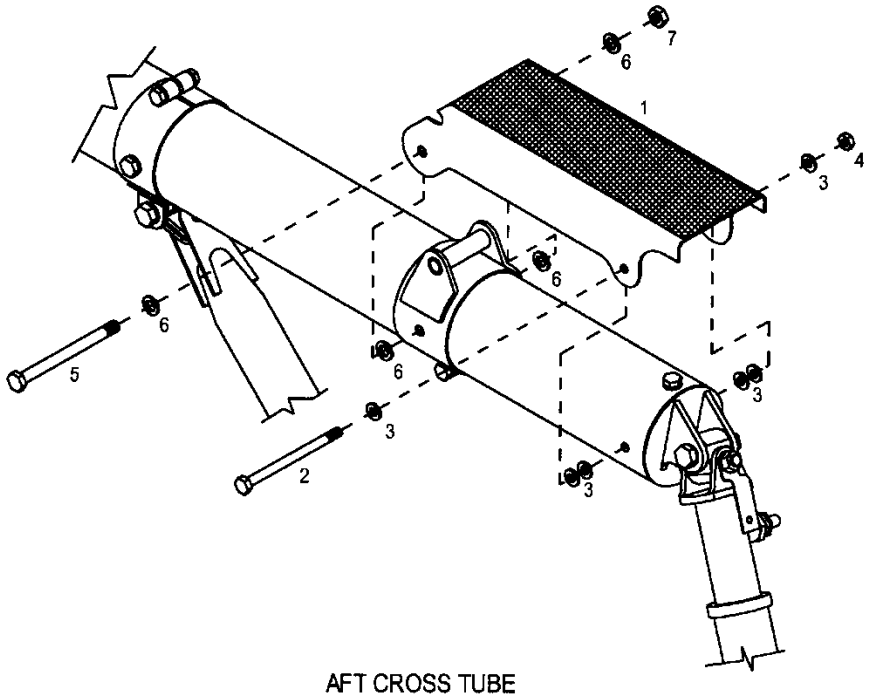

AFT CROSS TUBE

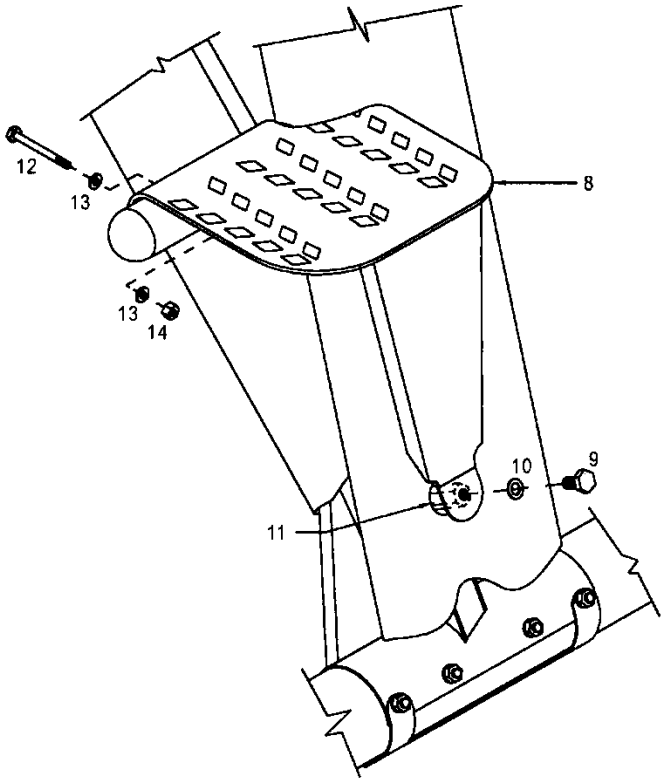

FORWARD STEP

FIGURE 4-6. LANDING GEAR STEPS

FIGURE 5-1. FUEL CELL INSTALLATION – AEROTECH/UFCC FUEL CELLS

ITEM NUMBER	PART NUMBER	DESCRIPTION	QTY PER ASSY	EFFECTIVITY		
				TH-28	480	480B
–	4122054-3	Fuel System Installation	Ref		X	X
1♦	4122052-7	. Fuel Bladder, L/H	1		X	X
–♦	4122052-3	. Fuel Bladder, L/H (Superseded by 4122052-7)	1	X	X	X
–	4122054-903	. Left-Fuel Bladder Sub Assembly	Ref	X	X	X
–♦♦	4122052-101	. . Fuel Bladder, L/H (Without Foam Baffles)	1		X	X
–♦	4122052-5	. . Fuel Bladder, L/H (Without Foam Baffles) (Superseded by 4122052-101)	1		X	X
–♦	4122052-1	. . Fuel Bladder L/H (Without Foam Baffles) (Superseded by 4122052-101)	1	X	X	X
–	4122058-901	. . Foam Assembly: Fuel Bladder L/H	1		X	X
2♦	4122052-8	. Fuel Bladder, R/H	1		X	X
–♦	4122052-4	. Fuel Bladder, R/H (Superseded by 4122052-8)	1	X	X	X
–	4122052-10	. Fuel Bladder, R/H (Inactive)	1		X	X
–	4122054-906	. Right-Fuel Bladder Sub Assembly	Ref	X	X	X
–	4122054-904	. Right-Fuel Bladder Sub Assembly (Superseded by 4122054-906)	Ref	X	X	X
–♦♦	4122052-102	. . Fuel Bladder, R/H (Without Foam Baffles)	1		X	X
–♦	4122052-6	. . Fuel Bladder R/H (Without Foam Baffles) (Superseded by 4122052-102)	1		X	X
–♦	4122052-2	. . Fuel Bladder R/H (Without Foam Baffles) (Superseded by 4122052-102)	1	X	X	X
–	4122058-902	. . Foam Assembly: Fuel Bladder R/H	1	X	X	X
3	ECD4049-11	. Gasket	2	X	X	X
4	4122053-13	. . Flange Plate	2	X	X	X
5	NAS1149D0416H	. . Washer	56	X	X	X
6	AN4H3A	. Bolt	56	X	X	X
–	MS20995C25	. Safety Wire	A/R	X	X	X
7**	4122057-3	. . Flange Plate Assembly, L/H (See Figure 5-7 for breakdown)	1	X	X	X
7	4122057-1	. . Flange Plate Assembly, L/H (See Figure 5-7 for breakdown) (Superseded by 4122057-3)	1	X	X	X
8**	4122057-4	. . Flange Plate Assembly, R/H (See Figure 5-7 for breakdown)	1	X	X	X
8	4122057-2	. . Flange Plate Assembly, R/H (See Figure 5-7 for breakdown) (Superseded by 4122057-4)	1	X	X	X
9	MS24694-S94	. Screw	17	X	X	X

FIGURE 5-1. FUEL CELL INSTALLATION – AEROTECH/UFCC FUEL CELLS

ITEM NUMBER	PART NUMBER	DESCRIPTION	QTY PER ASSY	EFFECTIVITY		
				TH-28	480	480B
9A°	MS24693-S294	. Screw	8			X
10	4122065-27	. Gasket	2	X	X	X
11	ECD4049-13	. Gasket	2	X	X	X
11	ECD4049-13	. Gasket	2	X	X	X
12●	4122048-3	. Flanged Mounting Plate	1	X	X	X
13●	ECD4037-11	. Gasket	1	X	X	X
14*●	4122088-5	. Fuel Capacitance Probe	1			X
14	4122088-3	. Fuel Capacitance Probe	1	X	X	X
14*	4122088-1	. Fuel Capacitance Probe (Superseded by 4122088-5)	1			X
15	AN525-10R18	. Screw	5	X	X	X
16●	4122065-21	. Spacer	2	X	X	X
17	4119333-3	. Fuel Cell Panel, L/H	1	X	X	X
18	4119333-4	. Fuel Cell Panel, R/H	1	X	X	X
19▲	AN525-10R6	. . Screw	34	X	X	X
–▲	MS21075L3N	. . Nutplate	54	X	X	X
–▲	AN525-10R8	. . Screw	2	X	X	X
–▲	MS21061L3	. . Nutplate	2	X	X	X
–▲	AN525-10R7	. . Screw	28	X	X	X
–▲	MS24694S51	. . Screw	2	X	X	X
20▲	AN525-10R10	. . Screw	32	X	X	X
21	4122065-25	. Gasket	1	X	X	X
22	4122074-905	. Fuel Cap Flange Assembly	1	X	X	X
22A	4122074-11	. . Flange	1	X	X	X
–	MS29561-232	. . O-Ring	1	X	X	X
23	AN525-416R8	. Screw	10	X	X	X
23∞	AN525-416R10	. Screw	2	X	X	X
23A†	AN525-416R14	. Screw	6		X	X
–∞	NAS1149C0463R	. Washer	2	X	X	X
24●	4122065-23	. Gasket	1	X	X	X
25●	4122065-15	. Cover Plate	1	X	X	X
26‡	4122071-1	. Dip Stick Tube	1	X	X	X
–	4122071-13	. Dip Stick	1	X	X	X
27†	4122065-33	. Cover	1		X	X
28†	AN525-416R10	. Screw	6		X	X
29†	ECD4092-1	. Fuel Quantity Transmitter	1		X	X
30†	4122084-1	. Flanged Cup Assembly	1		X	X
31†	NAS6604H2	. Bolt	6		X	X

FIGURE 5-1. FUEL CELL INSTALLATION – AEROTECH/UFCC FUEL CELLS

ITEM NUMBER	PART NUMBER	DESCRIPTION	QTY PER ASSY	EFFECTIVITY		
				TH-28	480	480B
–	MS20995C25	. . Safety Wire	A/R		X	X
32†	MS28775-233	. O-Ring	1		X	X
33†	4122084-13	. Spanner Nut	1		X	X
34†	4122065-35	. Gasket	1		X	X
35†	NAS1149F0432P	. Washer	6		X	X

* Used on serial numbers 5046, 5048 and subsequent, with indicator P/N ECD4038-5.

** Effectivity 480B S/N 5147 and subsequent.

≡ See Appendix A for equivalent part information.

♦ Effectivity 480B S/N 5176 and subsequent. Retrofittable to 480 S/N 5001-5041, 480B S/N 5042 and subsequent.

● Hardware for the previous fuel probe installation (prior to 480B S/N 5198). Replaced by new fuel probe system.

† The new fuel probe installation hardware. Replaces previous fuel probe hardware. Effectivity 480B S/N 5198 and subsequent. Retrofittable to 480 S/N 5014-5041 and 480B S/N 5042 and subsequent modified in accordance with SIL T-061.

‡ 480B S/N 5231 and subsequent and helicopters modified in accordance with SIL T-062 are not equipped with item 26.

° Effectivity 480B S/N 5231 and subsequent. Retrofittable to 480B S/N 5042 and subsequent.

∞ Installed at the fuel cap flange assembly hinge. Effectivity 480B S/N 5231 and subsequent. Retrofittable to 480B S/N 5042 and subsequent.

♦♦ Effectivity 480B S/N 5251 and subsequent. Retrofittable to 480/480B S/N 5013 and subsequent.

▌ ▲ Hardware used in 4119333-3 and 4119333-4 assemblies.

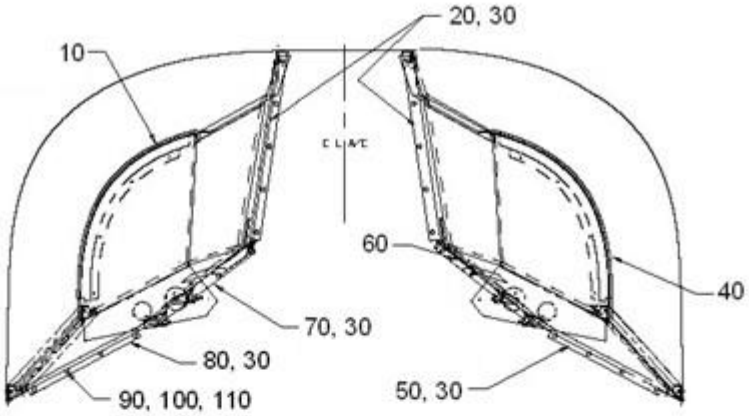

View Looking Forward

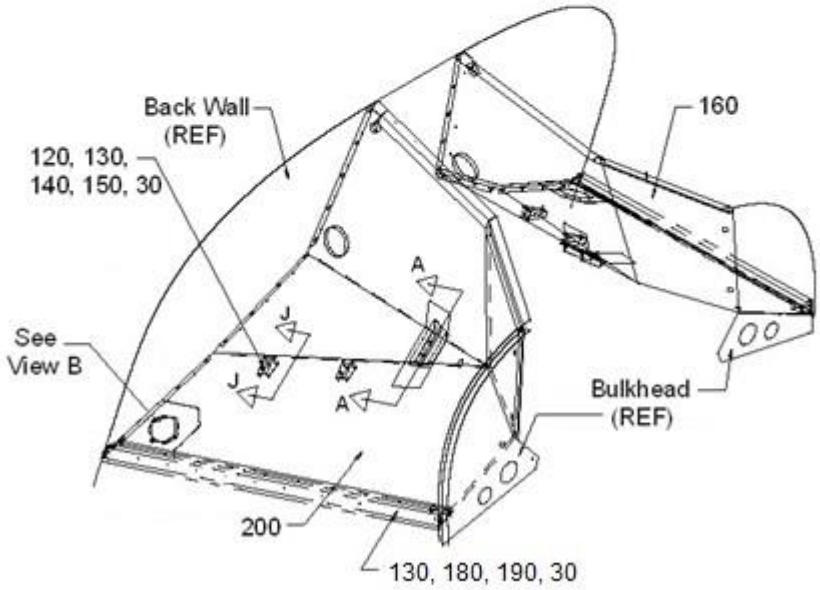

Isometric View from Left Side of Aircraft
Bladder Structure and Attachments

Sheet 1 of 4
480/480B: S/N 5001 and Subsequent

FIGURE 5-2. FUEL BLADDER STRUCTURE ASSY/INSTALL– AEROTECH/UFCC FUEL CELLS

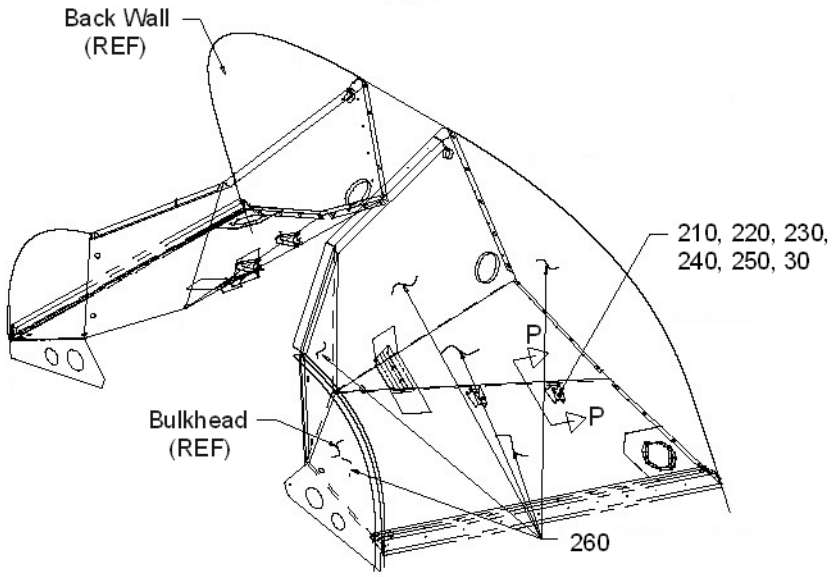

Isometric View From Right Side of Aircraft
Bladder Structure and Attachments

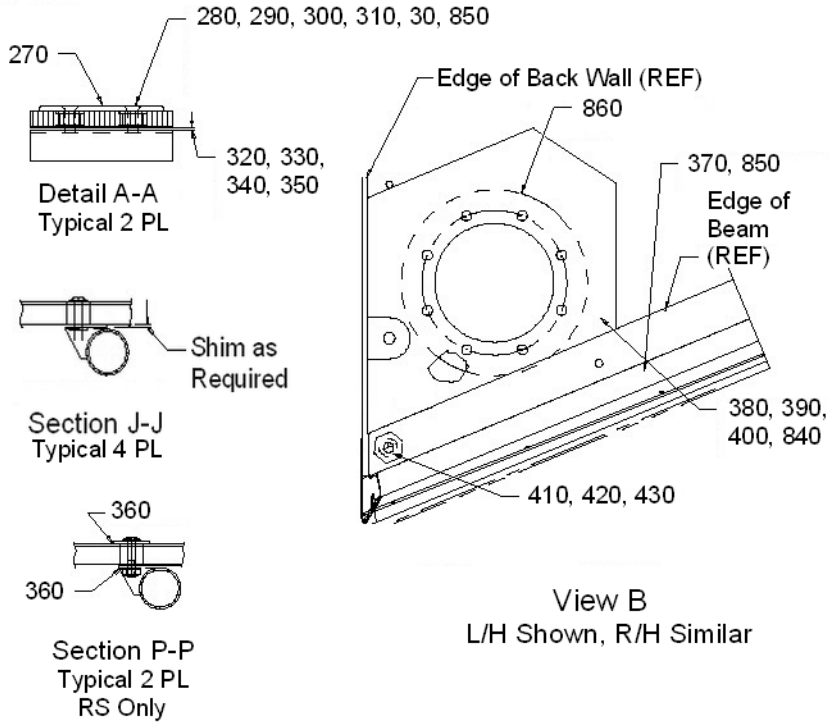

Sheet 2 of 4
480/480B: S/N 5001 and subsequent

FIGURE 5-2. FUEL BLADDER STRUCTURE ASSY/INSTALL– AEROTECH/UFCC FUEL CELLS

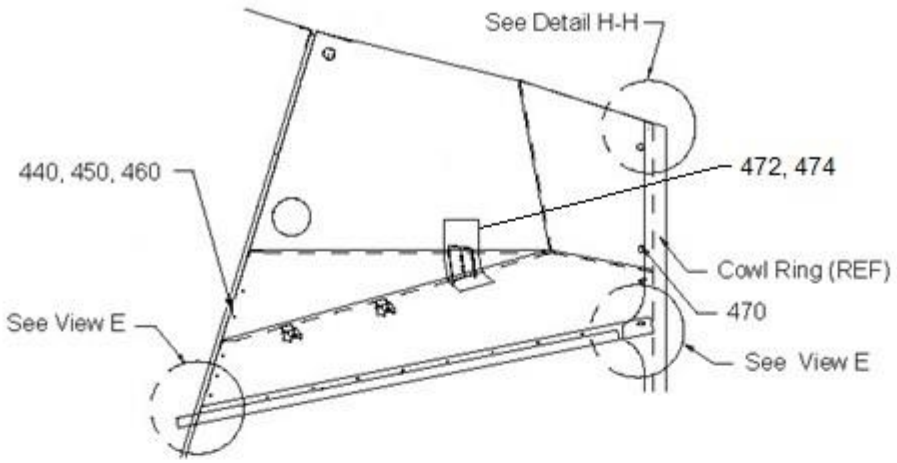

View Looking Inboard at Left Bladder,
Right Bladder Similar

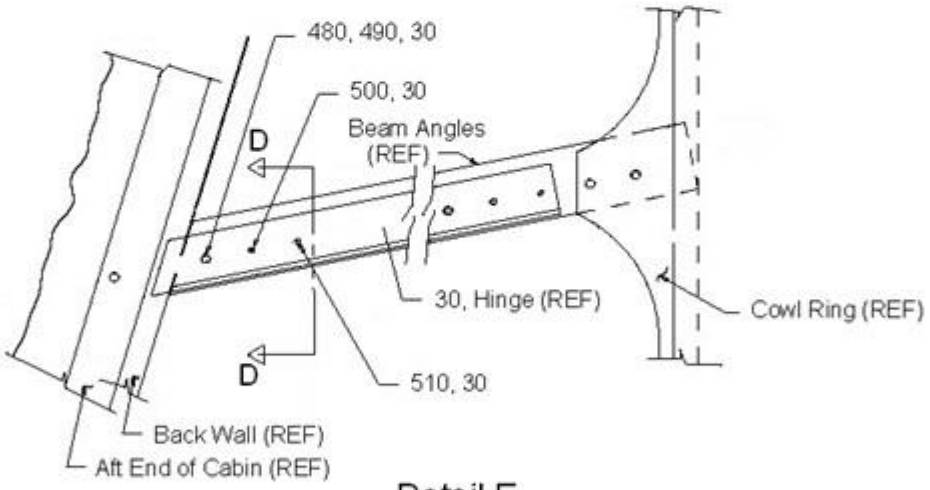

Detail E

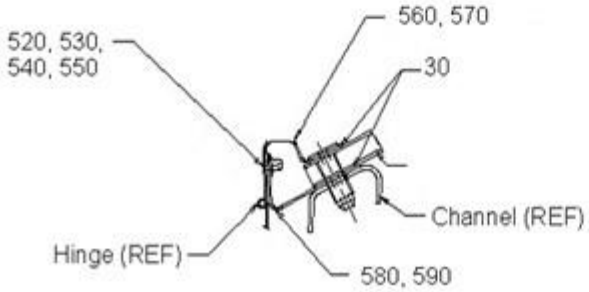

Detail D

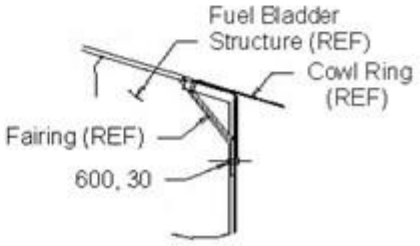

Detail H

Sheet 3 of 4
480/480B: S/N 5001 and subsequent

FIGURE 5-2. FUEL BLADDER STRUCTURE ASSY/INSTALL– AEROTECH/UFCC FUEL CELLS

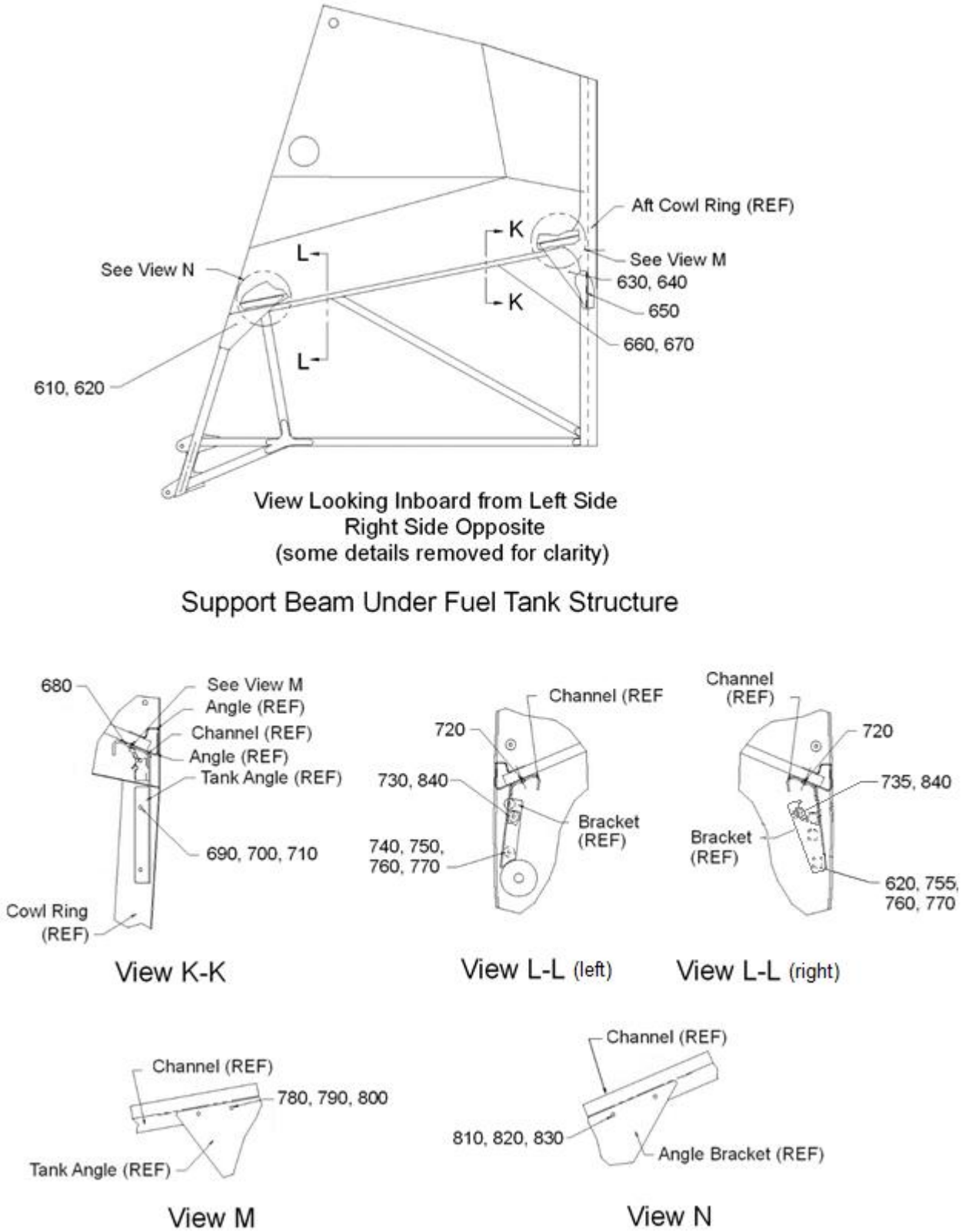

Sheet 4 of 4
480/480B: S/N 5001 and subsequent

FIGURE 5-2. FUEL BLADDER STRUCTURE ASSY/INSTALL– AEROTECH/UFCC FUEL CELLS

FIGURE 5-2. FUEL BLADDER STRUCTURE ASSY/INSTALL– AEROTECH/UFCC FUEL CELLS

ITEM NUMBER	PART NUMBER	DESCRIPTION	QTY PER ASSY	EFFECTIVITY		
				TH-28	480	480B
–	4122061-5	Bladder Structure Assy/Install	REF		X	X
10	4122086-11	. Fairing Fuel Bladder Structure (L/H)	1		X	X
20	4122005-39	. Angle Fuel Tank Attach	2		X	X
30	PR1440B1/2QT	. . Sealant: Fuel Tank (See Note 2)	A/R		X	X
30	PR1440B2	. . Sealant: Fuel Tank (Alternate to PR1440B1/2QT)	A/R		X	X
40	4122086-12	. Fairing Fuel Bladder Structure (R/H)	1		X	X
50	4122005-20	. Angle Fuel Tank Attach	2		X	X
60	4122005-43	. Angle Fuel Tank Attach	1		X	X
70	4122005-41	. Angle Fuel Tank Attach	1		X	X
80	4122005-19	. Angle Fuel Tank Attach	2		X	X
90	MS24694-S56	. Screw, Machine	26		X	X
100	NAS1149F0332P	. Washer, Flat	26		X	X
100	AN960-10L	. Washer, Flat (Alternate)	26		X	X
110	MS21083N3	. Nut, Hex	26		X	X
110	AN364-1032A	. Nut, Hex (Superseded by MS21083N3)	26		X	X
120	NAS1833-3-500	. Insert, Threaded	2		X	X
130	AN525-10R14	. Screw, Machine	22		X	X
140	NAS1149F0332P	. Washer, Flat	2		X	X
140	AN960-10L	. Washer, Flat (Alternate)	2		X	X
150	MS21083N3	. Nut, Hex	2		X	X
150	AN364-1032A	. Nut, Hex (Superseded by MS21083N3)	2		X	X
160	4122044-2	. Fuel Bladder Structure Assy (R/H)	1		X	X
180	NAS1149F0332P	. Washer, Flat	20		X	X
180	AN960-10L	. Washer, Flat (Alternate)	20		X	X
190	MS21083N3	. Nut, Hex	20		X	X
190	AN364-1032A	. Nut, Hex (Superseded by MS21083N3)	20		X	X
200	4122044-1	. Fuel Bladder Structure Assy (L/H)	1		X	X
210	NAS1833-3-500	. Insert, Threaded	2		X	X
220	AN525-10R16	. Screw, Machine	2		X	X
230	AN970-3	. Washer, Flat (Use Under Head)	2		X	X
240	NAS1149F0332P	. Washer, Flat (Use Under Nut)	2		X	X
240	AN960-10L	. Washer, Flat (Use Under Nut) (Alternate)	2		X	X
250	MS21083N3	. Nut, Hex	2		X	X
250	AN364-1032A	. Nut, Hex (Superseded by MS21083N3)	2		X	X
260*	1238716	. . Electrodag	A/R		X	X
270	4122005-49	. Washer	2		X	X
280	NAS1833-3-500	. Insert, Threaded	2		X	X

FIGURE 5-2. FUEL BLADDER STRUCTURE ASSY/INSTALL– AEROTECH/UFCC FUEL CELLS

ITEM NUMBER	PART NUMBER	DESCRIPTION	QTY PER ASSY	EFFECTIVITY		
				TH-28	480	480B
290	MS24694-S301	. Screw, Machine	2		X	X
300	MS21083N4	. Nut, Hex	2		X	X
300	AN364-428A	. Nut, Hex (Superseded by MS21083N4)	2		X	X
310	NAS1149F0432P	. Washer, Flat	2		X	X
310	AN960-416L	. Washer, Flat (Alternate)	2		X	X
320	4122038-11	. Shim, Fuel Bladder Structure	A/R		X	X
330	4122038-13	. Shim, Fuel Bladder Structure	A/R		X	X
340	4122038-15	. Shim, Fuel Bladder Structure	A/R		X	X
350	4122038-17	. Shim, Fuel Bladder Structure	A/R		X	X
360*	CP8-TB	. . Kopr- Shield,	A/R		X	X
370	NAS1833-3-500	. Insert, Threaded	20		X	X
380	4122062-11	. Flange Plate Fuel Structure	1		X	X
390	4122062-13	. Flange Plate Fuel Structure	1		X	X
400	EA9309NA	. . Adhesive; Structural Epoxy	A/R		X	X
410	28-12429-9	. Fitting, Drain Outlet	2		X	X
420	NAS1149F0763P	. Washer, Flat (Use on Far Side)	2		X	X
420	AN960-716	. Washer, Flat (Use on Far Side) (Alternate)	2		X	X
430	AN924-4W	. Nut, Tube	2		X	X
430	AN924-4D	. Nut, Tube (Superseded by AN924-4W)	2		X	X
440	AN525-832R7	. Screw, Machine	10		X	X
450	NAS1149FN816P	. Washer, Flat	10		X	X
450	AN960-8L	. Washer; Flat (Alternate)	10		X	X
460	MS21083N08	. Nut, Hex	10		X	X
460	AN364-832A	. Nut, Hex (Superseded by MS21083N08)	10		X	X
470	AN526-1032R6	. Screw, Machine	8		X	X
472	4122005-25	. Doubler	1		X	X
474	4122005-26	. Doubler	1		X	X
480	NAS1068A3	. Nut Plate	13		X	X
490	CCR264SS-3-02	. Rivet	26		X	X
500	CR3212-4-03	. Rivet	9		X	X
510	CR3212-4-03	. Rivet	10		X	X
520	NAS1068A3	. Nut Plate	10		X	X
530	CCR264SS-3-02	. Rivet	2		X	X
540	CR3212-4-02	. Rivet	10		X	X
550	CR3212-4-03	. Rivet	10		X	X
560	4122047-19	. Angle Beam	1		X	X
570	4122047-20	. Angle Beam	1		X	X
580	4122047-17	. Angle Beam	1		X	X

FIGURE 5-2. FUEL BLADDER STRUCTURE ASSY/INSTALL– AEROTECH/UFCC FUEL CELLS

ITEM NUMBER	PART NUMBER	DESCRIPTION	QTY PER ASSY	EFFECTIVITY		
				TH-28	480	480B
590	4122047-18	. Angle Beam	1		X	X
600	MS20470A4-4	. Rivet	3		X	X
600	MS20470AD4-4	. Rivet (Replaced by MS20470A4-4)	4		X	X
610	4122085-13	. Angle Bracket Fuel Tank Support	1		X	X
620**	4122085-24	. Angle Bracket Fuel Tank Support	1		X	X
620	4122085-14	. Angle Bracket Fuel Tank Support (Superseded by 4122085-24)	1		X	X
630	4122085-15	. Tank Angle Fuel Structure	1		X	X
640	4122085-16	. Tank Angle Fuel Structure	1		X	X
650	4122047-17	. Angle Beam	1		X	X
660	4122085-21	. Channel Fuel Tank Support (LH)	1		X	X
670	4122085-22	. Channel Fuel Tank Support (RH)	1		X	X
680	4122047-19	. Angle Beam	1		X	X
690	MS27039-1-11	. Screw, Machine	3		X	X
700	NAS1149F0363P	. Washer, Flat	6		X	X
700	AN960-10	. Washer, Flat (Alternate)	6		X	X
710	MS21083N3	. Nut, Hex	3		X	X
710	AN364-1032A	. Nut, Hex (Superseded by MS21083N3)	3		X	X
720	CR3213-5-03	. Rivet	38		X	X
730	NAS1834A3-500	. Insert	1		X	X
735	NAS1834A3K500	. Insert	1		X	X
740	4122085-13	. Angle Bracket Fuel Tank Support	2		X	X
750	MS27039-1-16	. Screw, Machine	2		X	X
755	MS24694-S58	. Screw	2		X	X
760	NAS1149F0363P	. Washer, Flat	4		X	X
760	AN960-10	. Washer, Flat (Alternate)	4		X	X
770	MS21083N3	. Nut, Hex	2		X	X
770	AN364-1032A	. Nut, Hex (Superseded by MS21083N3)	2		X	X
780	MS27039-1-09	. Screw, Machine	4		X	X
790	NAS1149F0363P	. Washer, Flat	8		X	X
790	AN960-10	. Washer, Flat (Alternate)	8		X	X
800	MS21083N3	. Nut, Hex	4		X	X
800	AN364-1032A	. Nut, Hex (Superseded by MS21083N3)	4		X	X
810	MS27039-1-09	. Screw, Machine	4		X	X
820	NAS1149F0363P	. Washer, Flat	8		X	X
820	AN960-10	. Washer, Flat (Alternate)	8		X	X
830	MS21083N3	. Nut, Hex	4		X	X
830	AN364-1032A	. Nut, Hex (Superseded by MS21083N3)	4		X	X

FIGURE 5-2. FUEL BLADDER STRUCTURE ASSY/INSTALL– AEROTECH/UFCC FUEL CELLS

ITEM NUMBER	PART NUMBER	DESCRIPTION	QTY PER ASSY	EFFECTIVITY		
				TH-28	480	480B
840	EC-776	. . Sealant: Tank, Fuel Resistant (See Note 1)	A/R		X	X
850	EA9394	. . Adhesive: Structural Epoxy (See Note 3)	A/R		X	X
860	TF3056FR	. . Compound: Potting (See Note 4)	A/R		X	X

Note 1 Use EC-776 fire resistant tank sealant to coat the interior of the fuel bladder structure and the backwall.

Note 2 Use PR1440B1/2QT fuel tank sealant to seal the backwall to the structure joints and to the beam, cowl ring, and cabin.

Note 3 Pot inserts with EA9394 structural epoxy adhesive per SP-141.

Note 4 Edge fill with TF3056FR potting compound.

* Effectivity 480 S/N 5001, 480B S/N 5042 – 5197. No longer installed on 480B S/N 5198 and subsequent.

** Effectivity 480B S/N 5176 and subsequent. Retrofittable to 480 S/N 5001, 480B S/N 5042 and subsequent.

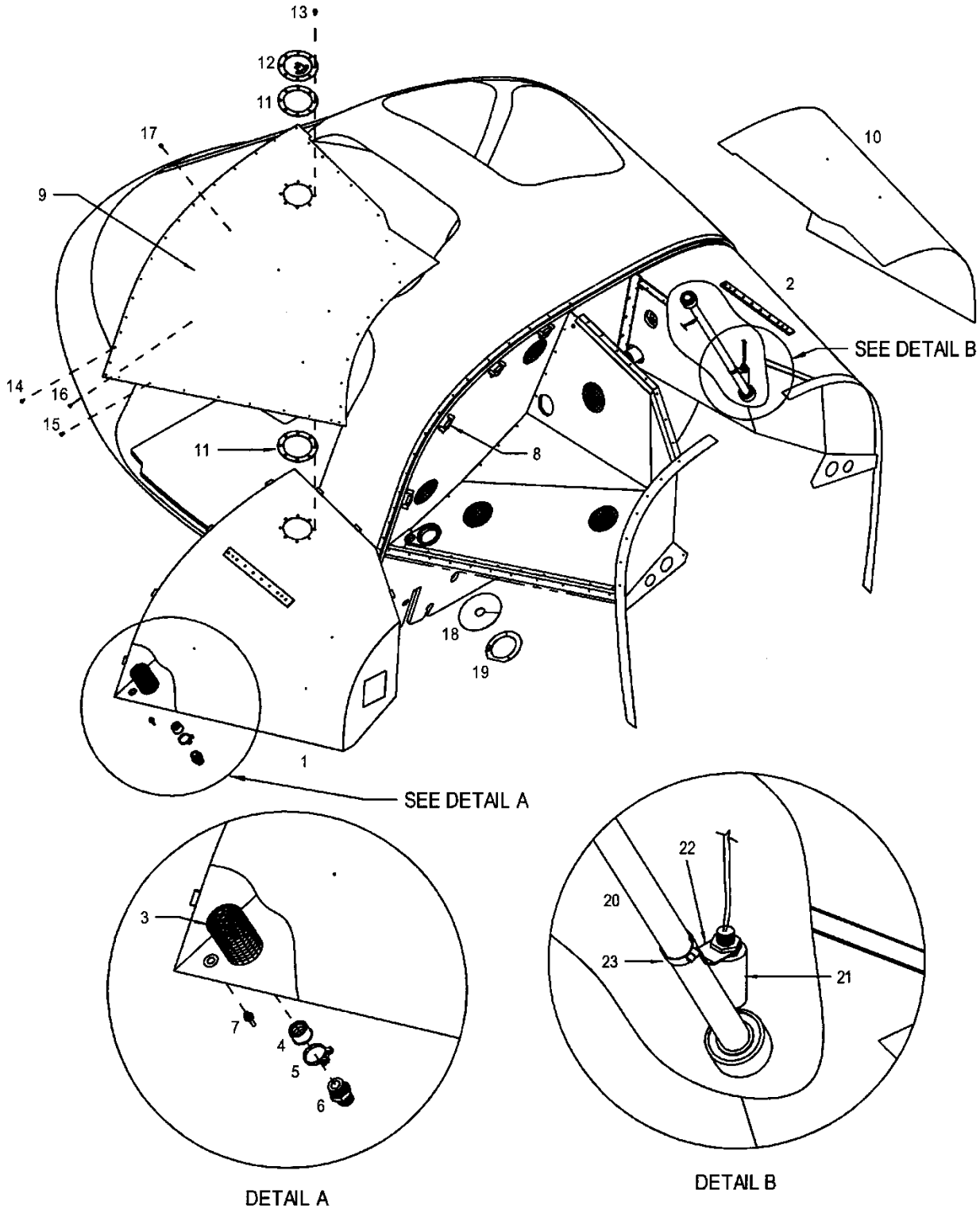

480: S/N 5001-5009
TH-28: 3006

FIGURE 5-3. FUEL CELL INSTALLATION – AERAZUR FUEL CELLS

FIGURE 6-1. ENGINE BUILDUP ASSEMBLY

ITEM NUMBER	PART NUMBER	DESCRIPTION	QTY PER ASSY	EFFECTIVITY		
				TH-28	480	480B
–	23052351	Engine Assembly, 250-C20W	1	X	X	X
1‡‡	4129054-45	. Fitting Assembly	2	X	X	X
1	4129054-7	. Fitting Assembly (Superseded by 412054-45)	2	X	X	X
2	MS28778-8	. . O-Ring	1	X	X	X
3‡‡	4129054-37	. Fitting Assembly	1	X	X	X
3	4129054-5	. Fitting Assembly (Superseded by 4129054-37)	1	X	X	X
4	MS28778-8	. . O-Ring	1	X	X	X
5‡‡	4129054-39	. Fitting Assembly	1	X	X	X
5	4129054-105	. Fitting Assembly (Superseded by 4129054-39)	1	X	X	X
6	MS28778-10	. . O-Ring	1	X	X	X
7	4F5BX-SS	. Fitting Assembly	1	X	X	X
8	NAS617-5	. . O-Ring	1	X	X	X
9	848-FSO-04-03	. Fitting Assembly	4	X	X	X
9‡‡	4-3 F5OX-SS	. Fitting, Parker Hannifin (Alternate)	4	X	X	X
10	NAS617-3	. . O-Ring	1	X	X	X
11	S-9216EC-1	. Fitting Assembly	2	X	X	X
12	AS3084-08	. . O-Ring	1	X	X	X
12	MS28778-8	. . O-Ring (Alternate)	1	X	X	X
13	4120517-11	. Line Assembly	1	X	X	X
14	E9000-10	. Line Assembly	1	X	X	X
14	4120517-13	. Line Assembly (Alternate)	1	X	X	X
–	MS51521B8S	. Swivel Nut Elbow (Used with 4120517-13)	1	X	X	X
15	4129518-1	. Coupling	1	X	X	X
16*	0402-005	. Signal Generator, N_2	1	X	X	
16**	32005-023	. Tachometer Generator, N_2	1	X	X	X
17	32005-023	. Tachometer Generator, N_1	1	X	X	X
18	AS3491-01	. Gasket	2	X	X	X
19	MS21043-4	. Nut	8	X	X	X
20‡‡	NAS1149C0432R	. Washer	4	X	X	X
20‡‡	NAS1149F0432P	. Washer (Replaced by NAS1149C0432R)	4	X	X	X
20	AN960-416L	. Washer (Superseded by NAS1149F0432P)	4	X	X	X
21	4120021-1	. Bleed Air Dump	1	X	X	X
22	PK 86XZ-8-8	. Screw	4	X	X	X
23	23054604	. Gasket	2	X	X	X
24	SPDD2315	. Fuel Pressure Switch	1	X	X	X

FIGURE 6-1. ENGINE BUILDUP ASSEMBLY

ITEM NUMBER	PART NUMBER	DESCRIPTION	QTY PER ASSY	EFFECTIVITY		
				TH-28	480	480B
25	849-FSO-04X04	. Fitting Assembly	2	X	X	X
25‡‡	4 C5OX-S	. Fitting, Parker Hannifin (Alternate)	2	X	X	X
26	MS29512-4	. . O-Ring	1	X	X	X
27	MS21919WF16	. Clamp	1	X	X	X
28	MS9101-03	. Clip	1	X	X	X
29	MS35206-247	. Screw	1	X	X	X
29	AN515-8R12	. Screw (Superseded by MS35206-247)	1	X	X	X
30	28-16476-2	. Spacer	1	X	X	X
31	MS35649-282	. Nut	1	X	X	X
31	AN340-832	. Nut (Superseded by MS35649-282)	1	X	X	X
32	MS35338-42	. Lock Washer	1	X	X	X
32	AN935-8	. Lock Washer (Alternate)	1	X	X	X
33	NAS1149FN816P	. Washer	2	X	X	X
33	AN960-8L	. Washer (Alternate)	2	X	X	X
34	4122043-11	. Stand-off/Stud	1	X	X	X
35	MS21042-3	. Nut	1	X	X	X
36‡‡	NAS1149F0363P	. Washer	1	X	X	X
36	AN960-10	. Washer (Superseded by NAS1149F0363P)	1	X	X	X
37	4122042-5	. Line Assembly	1	X	X	X
38	AN833-4	. Elbow	1	X	X	X
39	NAS1149F0863P	. Washer	1	X	X	X
39	AN960-816	. Washer (Alternate)	1	X	X	X
40	AN924-4	. Nut	1	X	X	X
41	23063426	. Seal, Double Lip	2	X	X	X
42	4120046-11	. Stud (Standard)	6	X	X	X
42	4120046-13	. Stud (.003 oversize)	6	X	X	X
42	4120046-15	. Stud (.006 oversize)	6	X	X	X
42	4120046-17	. Stud (.009 oversize)	6	X	X	X
43‡‡	4129054-41	. Fitting Assembly	1	X	X	
43‡	4129054-13	. Fitting Assembly (Superseded by 4129054-41)	1	X	X	
43‡Θ	4129054-3	. Fitting Assembly (Superseded by 4129054-13)	1	X	X	
44‡Θ	MS28778-12	. . O-Ring (Used with 4129054-3)	1	X	X	
45	4120032-13	. Vent Hose	1	X	X	X
45‡	4120031-1	. Line Assembly (Superseded by 4120032-13)	1	X	X	
46	4604-12-12-0	. Fitting	1	X	X	X
46‡	4120032-11	. Hose Adapter	1	X	X	

FIGURE 6-1. ENGINE BUILDUP ASSEMBLY

ITEM NUMBER	PART NUMBER	DESCRIPTION	QTY PER ASSY	EFFECTIVITY		
				TH-28	480	480B
47►	NAS1922-100-3	. Clamp	2	X	X	X
47	20012S	. Clamp (Superseded by NAS1922-100-3)	2	X	X	X
48▲	4120016-7	. Exhaust Stack, L/H	1	X	X	X
48††	4120016-5	. Exhaust Stack, L/H (Alternate)	1	X	X	X
48	4120016-3	. Exhaust Stack, L/H (Superseded by 4120016-5)	1	X	X	X
49 ▲	4120016-8	. Exhaust Stack, R/H	1	X	X	X
49††	4120016-6	. Exhaust Stack, R/H (Alternate)	1	X	X	X
49	4120016-4	. Exhaust Stack, R/H (Superseded by 4120016-6)	1	X	X	X
50	VC1019	. Exhaust Clamp	2	X	X	X
–	Z1200J-02	. . Nut	1	X	X	X
50	4133-0044	. Exhaust Clamp (Alternate)	2	X	X	X
51●●	150SG117Q-4-1	. Starter/Generator with Quad Mounting Kit	1		X	X
51●●	150SG117Q-4	. . Starter/Generator	1		X	X
–	150SG1009-5	. . . Brushes	4		X	X
52●	150SG1108	. . Clamp (Part of Quad Mounting Kit)	1			X
53●	150SG1040	. . Mounting Flange (Part of Quad Mounting Kit)	1			X
54	AS3209-113	. O-Ring	1	X	X	X
51●	150SG117Q-3-1	. Starter/Generator with Quad Mounting Kit	1		X	X
51●	150SG117Q-3	. . Starter/Generator	1		X	X
–	150SG1009-5	. . . Brushes	4		X	X
52●	150SG1108	. . Clamp (Part of Quad Mounting Kit)	1			X
53●	150SG1040	. . Mounting Flange (Part of Quad Mounting Kit)	1			X
54	AS3209-113	. O-Ring	1	X	X	X
51	524-080	. Starter/Generator	1	X	X	X
–	408764B	. . Brushes	4	X	X	X
52	323101A575ZB	. Clamp (Used with 4120011-11)	1	X	X	X
52	409140	. Band and Clamp Set (Used with 603864)	1	X	X	X
53	603864	. Mounting Bracket	1	X	X	X
53	4120011-11	. Mounting Bracket	1	X	X	X
54	AS3209-113	. O-Ring	1	X	X	X
55►	AS3492-01	. Gasket	1	X	X	X
55	MS9135-01	. Gasket (No Longer Available)	1	X	X	X
56	NAS1149C0563R	. Washer	4	X	X	X
56	AN960C516	. Washer (Alternate)	4	X	X	X
57	MS20500-524	. Nut	4	X	X	X

FIGURE 6-1. ENGINE BUILDUP ASSEMBLY

ITEM NUMBER	PART NUMBER	DESCRIPTION	QTY PER ASSY	EFFECTIVITY		
				TH-28	480	480B
58††	4122042-101	. Line Assembly	1	X	X	X
58	4122042-3	. Line Assembly (Superseded by 4122042-101)	1	X	X	X
59††	4122042-9	. Line Assembly	1	X	X	X
59	4122042-1	. Line Assembly (Superseded by 4122042-9)	1	X	X	X
60	23064565	. Accumulator Kit	1	X	X	X
61†	90120075	. Flow, Fuel, Miniflo	1	X	X	X
62†	4122040-11	. Bracket	1	X	X	X
63	MS35207-245	. Screw	11	X	X	X
64†	124F003-4CR0210	. Fuel Line	1	X	X	X
65	4120034-1	. Line Assembly	1	X	X	X
66	4120033-1	. Line Assembly	2	X	X	X
67	4120033-3	. Line Assembly	1	X	X	X
68	AN929A4J	. Cap Assembly	2	X	X	X
69	4120029-11	. Insert	1	X	X	X
70	4120029-13	. Insert	1	X	X	X
71	4120028-1	. Support Bracket	1	X	X	X
72	4120035-11	. Bracket	1	X	X	X
73	28-12400-23	. Clamp	1	X	X	X
74‡‡	MS35338-42	. Lock Washer	2	X	X	X
74	AN935-8	. Lock Washer (Superseded by MS3533-42)	2	X	X	X
75‡‡	NAS1149FN832P	. Washer	6	X	X	X
75	AN960-8	. Washer (Superseded by NAS1149FN832P)	6	X	X	X
76	MS21083N08	. Nut	1	X	X	X
76	AN364-832A	. Nut (Superseded by MS21083N08)	1	X	X	X
77	4129560-9	. Cable Assembly	1	X	X	X
78	4122015-15	. Screw	1	X	X	X
79‡‡	MS21083N3	. Nut	1	X	X	X
79	AN364-1032A	. Nut (Superseded by MS21083N3)	1	X	X	X
80‡‡	NAS1149C0332R	. Washer	A/R	X	X	X
80	AN960C10L	. Washer (Superseded by NAS1149C0332R)	A/R	X	X	X
81‡‡	MS35206-245	. Screw	1	X	X	X
81	AN515-8R8	. Screw (Superseded by MS35206-245)	1	X	X	X
82♦	MS35649-282	. Nut	1	X	X	X
82‡‡	MS21042-08	. Nut (Superseded by MS35649-282)	1	X	X	X
82	AN340-8	. Nut (Superseded by MS21042-08)	1	X	X	X
83	4120022-13	. Bracket	1	X	X	X
84	MS20392-2C31	. Pin	1	X	X	X

FIGURE 6-1. ENGINE BUILDUP ASSEMBLY

ITEM NUMBER	PART NUMBER	DESCRIPTION	QTY PER ASSY	EFFECTIVITY		
				TH-28	480	480B
85‡‡	NAS1149F0363P	. Washer	1	X	X	X
85	AN960-10	. Washer (Superseded by NAS1149F0363P)	1	X	X	X
86	AN381-2-8	. Cotter Pin	1	X	X	X
86	MS24665-151	. Cotter Pin (Alternate)	1	X	X	X
87	1SE1	. Switch, Miniature	1	X	X	X
88	JE-1	. Actuator	1	X	X	X
–	1-480319-0	. Housing	1	X	X	X
–	60618-1	. Contact	1	X	X	X
89	4120012-21	. Engine Mount, L/H	1	X	X	X
90	4120012-22	. Engine Mount, R/H	1	X	X	X
91	ECD4080-11	. Bolt	6	X	X	X
92‡‡	NAS1149F0532P	. Washer	6	X	X	X
92	AN960-516L	. Washer (Superseded by NAS1149F0532P)	6	X	X	X
93	NAS6605-15	. Bolt	2	X	X	X
93	AN5-13A	. Bolt (Superseded by NAS6605-15)	2	X	X	X
94‡‡	NAS1149F0563P	. Washer	A/R	X	X	X
94	AN960-516	. Washer (Superseded by NAS1149F0563P)	A/R	X	X	X
94‡‡	NAS1149F0532P	. Washer	A/R	X	X	X
94	AN960-516L	. Washer (Superseded by NAS1149F0532P)	A/R	X	X	X
95	MS20500-524	. Nut	2	X	X	X
96	4120012-13	. Spacer, .400"	A/R	X	X	X
97	4120012-15	. Spacer, .050"	A/R	X	X	X
98	4120012-17	. Spacer, .025"	A/R	X	X	X
99	4120012-19	. Spacer, .150"	A/R	X	X	X
100◊	4120013-21	. Engine Mount, Top	1	X	X	X
101	NAS6205-4H	. Bolt	3	X	X	X
102‡‡	NAS1149F0563P	. Washer	3	X	X	X
102	AN960-516	. Washer (Superseded by NAS1149F0563P)	3	X	X	X
103	NAS509-12	. Nut	2	X	X	X
104	FLX200120003208	. Duct, 8.00”	1	X	X	X
105	20044S	. . Hose Clamp	2	X	X	X
106	S500-8	. Clamp: Cushioned	1		X	X
107	S500-3	. Clamp: Cushioned	2		X	X
108‡‡	MS35206-245	. Screw	1		X	X
108▶	AN515-8R8	. Screw, Machine (Superseded by MS35206-245)	1		X	X
109‡‡	MS21042-08	. Nut	1		X	X

FIGURE 6-1. ENGINE BUILDUP ASSEMBLY

ITEM NUMBER	PART NUMBER	DESCRIPTION	QTY PER ASSY	EFFECTIVITY		
				TH-28	480	480B
109▶	AN340-8	. Nut, Hex (Superseded by MS21042-08)	1		X	X
110‡‡	NAS1149FN832P	. Washer	1		X	X
110▶	AN960-8	. Washer, Flat (Superseded by NAS1149FN832P)	1		X	X
111▶	AN935-8	. Lock Washer (Superseded by MS21042-08)	1		X	X
112▶	608036-1	. Tape: Silicon Fusion Hi-Temp	A/R		X	X
113 Δ	CA3106E8S1SF80F42	. Connector	2		X	X
114 Δ	370BA002B0203AN	. Backshell, 90°	2		X	X

*	Used with Dual Indicator (N_2/N_R), P/N 56004-003.
**	Used with Dual Indicator (N_2/N_R), P/N ECD4053-3,-4, and -5.
†	Optional equipment.
‡	Effectivity TH-28, S/N 3006 only; 480, S/N 5001-5036.
●	Effectivity 480B, S/N 5077, 5085 and subsequent.
●●	Effectivity 480B, S/N 5114 and subsequent and all 480B equipped with Increased Cooling Kit, P/N 4230031.
Θ	Effectivity 480B, S/N 5143 and subsequent.
▶	Effectivity 480B S/N 5155 and subsequent. Retrofittable to 480 S/N 5001 - 5041, 480B S/N 5042 and subsequent.
††	Effectivity 480B S/N 5158 and subsequent. Retrofittable to 480 S/N 5001 - 5041, 480B S/N 5042 and subsequent.
‡‡	Effectivity 480B S/N 5194 and subsequent. Retrofittable to 480 S/N 5001 – 5041, 480B S/N 5042 and subsequent.
♦	Effectivity 480B S/N 5218 and subsequent. Retrofittable to 480B S/N 5042 and subsequent.
◊	Reference: Upper engine mount pylon bushing is P/N 12-DU-16.
Δ	Part of P/N 4192514-902/-903 wiring harness.
▲	Effectivity 480B, S/N 5252 and subsequent. Retrofittable to 480 S/N 5001 - 5041, 480B S/N 5042 and subsequent.

INTENTIONALLY LEFT BLANK

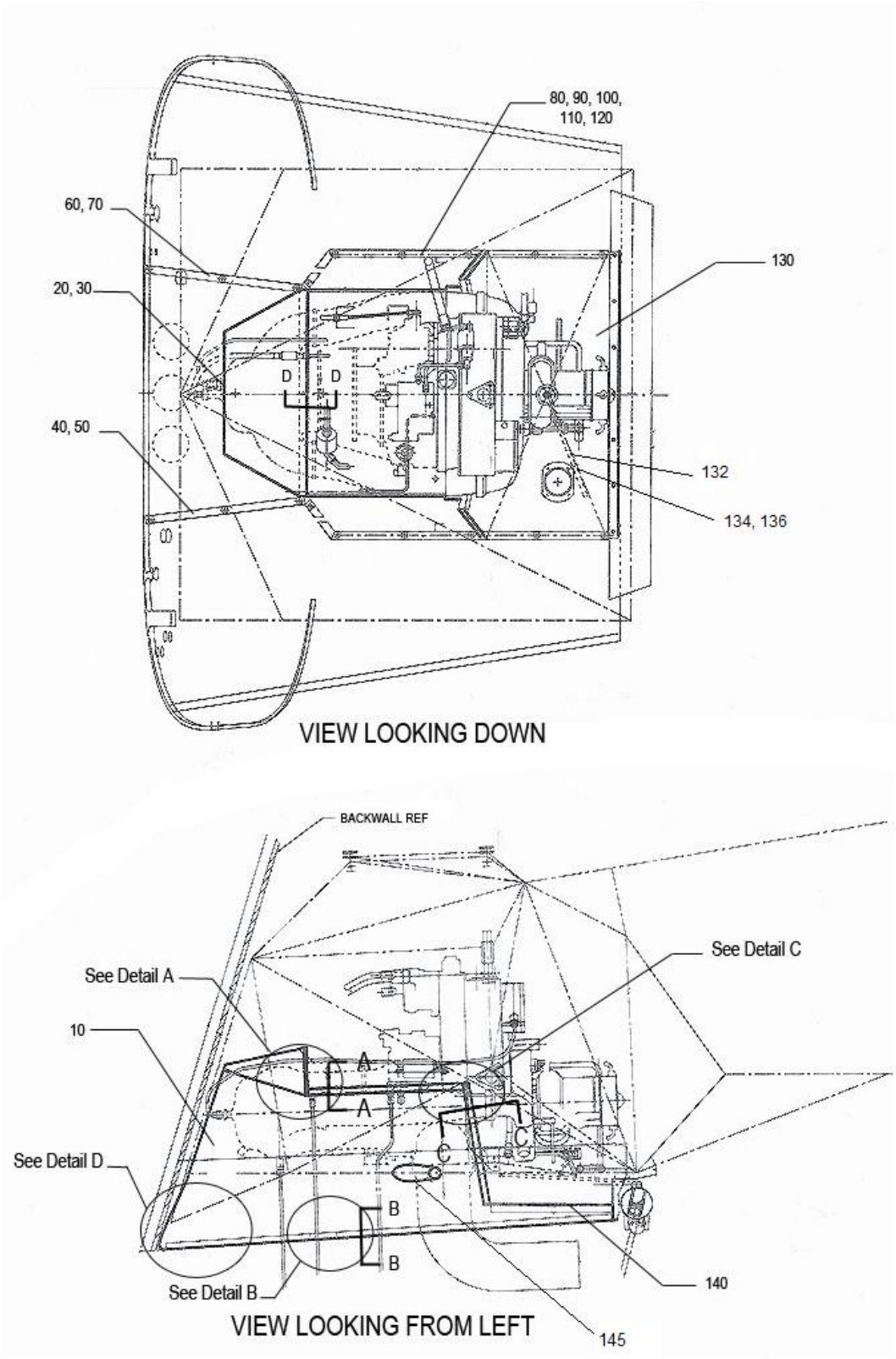

Sheet 1 of 3

FIGURE 6-1.1 FIRE CURTAIN INSTALLATION

FIGURE 6-1.1 FIRE CURTAIN INSTALLATION

ITEM NUMBER	PART NUMBER	DESCRIPTION	QTY PER ASSY	EFFECTIVITY		
				TH-28	480	480B
–*	4119500-107	Fire Curtain Installation	REF		X	X
10	4119526-1	. Fire Curtain Assembly	1		X	X
20	4119525-37	. Angle	1		X	X
30	8X1/2	. Screw	10		X	X
40	4119525-23	. Angle	1		X	X
50	4119525-45	. Strip	1		X	X
60	4119525-33	. Angle	1		X	X
70	4119525-43	. Strip	1		X	X
80	4119525-41	. Angle	1		X	X
90	4119525-49	. Strip	1		X	X
100	A01787-8Z-1D	. Tinnerman Nut	18		X	X
110	8X1/2	. Screw	6		X	X
120	MS20470A3-3	. Rivet	24		X	X
130	4119525-105	. Pan Assembly	1		X	X
–	A6196-8Z-1D	. . Tinnerman	2		X	X
–	4119523-1	. . Drain Fitting Weldment	1		X	X
–	MS35649-282	. . Nut	7		X	X
–	MS35338-42	. . Lock Washer	7		X	X
–	NAS1149FN816P	. . Washer	7		X	X
–	MS35206-243	. . Screw	7		X	X
–	4129523-21	. . Vent Hose Adapter	1		X	X
–	MS20427M3-3	. . Rivet	36		X	X
–	A6195-8Z-1D	. . Tinnerman	16		X	X
–	MS20615-3M2	. . Rivet	15		X	X
–	4119525-57	. . Pan	1		X	X
–	4119525-59	. . Angle	1		X	X
–	4119525-60	. . Angle	1		X	X
132	4119524-1	. Drain Tube	1		X	X
134	MS21919WCJ6	. Clamp	1		X	X
136	MS9101-03	. Bracket	1		X	X
140	4119525-61	. Strip	2		X	X
145	PLT1M-C71	. Cable Tie	3		X	X
150	4119525-107	. Shroud Assembly	1		X	X
–	MS20427M3-3	. . Rivet	26		X	X
–	A06195-8Z-1D	. . Tinnerman	13		X	X
–	4119525-67	. . Shroud	1		X	X
160	4119525-65	. Strip (L/H)	1		X	X
170	4119525-66	. Strip (R/H)	3		X	X

FIGURE 6-1.1 FIRE CURTAIN INSTALLATION

ITEM NUMBER	PART NUMBER	DESCRIPTION	QTY PER ASSY	EFFECTIVITY		
				TH-28	480	480B
180	8X1/2	. Screw	8		X	X
190	4119525-101	. Strip Assembly	1		X	X
–	4119525-53	. . Strip	1		X	X
–	NAS686-A08K	. . Nut Plate	2		X	X
–	A06195-8Z-1D	. . Tinnerman	2		X	X
–	MS20427M3-3	. . Rivet	8		X	X
200	4119525-103	. Strip Assembly	1		X	X
–	4119525-55	. . Strip	1		X	X
–	A06195-8Z-1D	. . Tinnerman	2		X	X
–	MS20427M3-3	. . Rivet	2		X	X
210	4119525-27	. Angle (L/H)	1		X	X
220	4119525-29	. Angle (R/H)	1		X	X
230	AN525-8R8	. Screw	12		X	X
240	NAS1149FN816P	. Washer	12		X	X
240	AN960-8L	. Washer (Alternate)	12		X	X
250	4119525-51	. Strip	1		X	X
260	4119525-47	. Plate	1		X	X
270	AN931-3-9	. Grommet	1		X	X
280	4119525-25	. Strip	1		X	X
290	8X1/2	. Screw	2		X	X
300	4119525-3	. Angle Assembly	1		X	X
–	4119525-21	. . Angle	1		X	X
310	A01787-8Z-1D	. . Tinnerman	9		X	X
–	MS20427M3-3	. . Rivet	4		X	X
320	MS20470A3-3	. Rivet	21		X	X
330	8X1/2	. Screw	9		X	X
340	8X1/2	. Screw	7		X	X
350	4119525-109	. Strip Assembly	1		X	X
–	4119525-63	. . Strip	1		X	X
–	A06195-8Z-1D	. . Tinnerman	5		X	X
–	MS20427M3-3	. . Rivet	10		X	X
360	4119525-110	. Strip Assembly	1		X	X
–	4119525-64	. . Strip	1		X	X
–	A06195-8Z-1D	. . Tinnerman	5		X	X
–	MS20427M3-3	. . Rivet	10		X	X
370	8X3/8	. Screw	9		X	X
380	4119525-5	. Angle Assembly	1		X	X

FIGURE 6-1.1 FIRE CURTAIN INSTALLATION

ITEM NUMBER	PART NUMBER	DESCRIPTION	QTY PER ASSY	EFFECTIVITY		
				TH-28	480	480B
–	4119525-19	. . Angle	1		X	X
–	A06195-6Z-1D	. . Tinnerman	3		X	X
–	A06195-8Z-1D	. . Tinnerman	10		X	X
–	MS20427M3-3	. . Rivet	26		X	X
390	4119525-15	. Angle	1		X	X
400	MS51862-14	. Screw	3		X	X
400	AN531-6R8	. Screw (Superseded by MS51862-14)	3		X	X
410	NAS6603-10	. Bolt	4		X	X
410	AN3-10A	. Bolt (Superseded by NAS6603-10)	4		X	X
415	NAS1149D0363J	. Washer	4		X	X
420	4119518-11	. Washer	4		X	X
430	NAS1149F0363P	. Washer	4		X	X
440	MS21042-3	. Nut	4		X	X
450	4119519-23	. Patch	2		X	X
460	4119519-25	. Patch	1		X	X
470	4119519-27	. Patch	2		X	X
480	4119519-29	. Patch	2		X	X
–	608036-1	. Tape	A/R		X	X

* Fire Curtain Repair Kit P/N 4119526-KIT is available by contacting Enstrom Customer Service. The kit contains fire curtain fabric, thread, and sealant for performing fire curtain repairs.

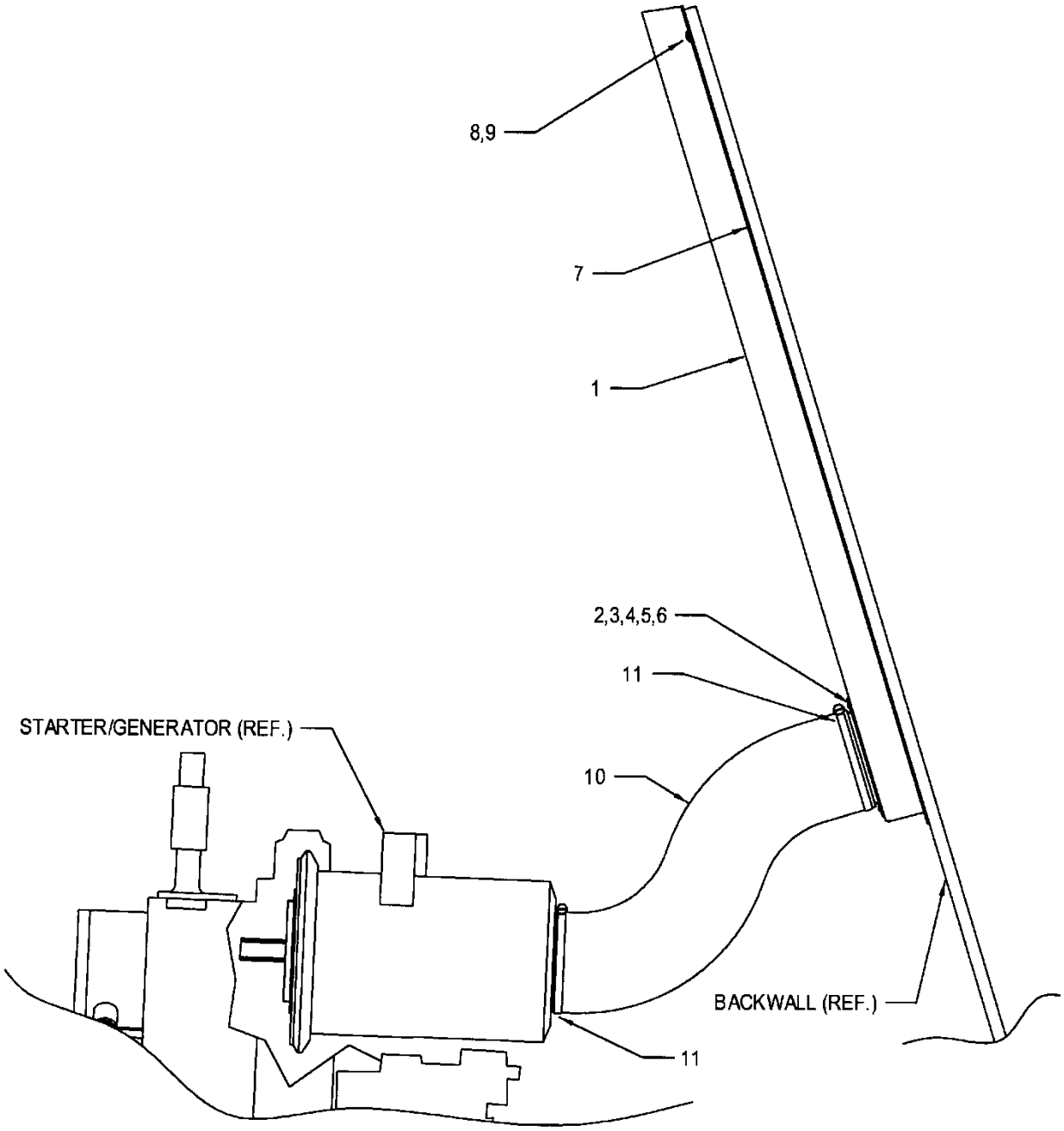

480B S/N 5114 and Subsequent

480B equipped with Increased Cooling Kit, P/N 4230031

FIGURE 6-2 STARTER/GENERATOR COOLING INSTALLATION

FIGURE 6-2 STARTER/GENERATOR COOLING INSTALLATION

ITEM NUMBER	PART NUMBER	DESCRIPTION	QTY PER ASSY	EFFECTIVITY		
				TH-28	480	480B
1	4199057-1	. Air Duct Assembly	1			X
1●	4199057-3	. Air Duct Assembly	1			X
2	28-12356-1	. . Stub	1			X
3‡	MS27039-0807	. . Screw	4			X
4‡	4199057-13	. . Doubler Ring	1			X
4†	4199057-15	. . Doubler Ring	1			X
5‡	NAS686A08K	. . Nut Plate	4			X
6‡	MS20426AD3-3	. . Rivet	8			X
6†	MS20470A3-4	. . Rivet	6			X
7	4941	. Tape, VHB	A/R			X
8*	MS27039-1-07	. Screw	8			X
9*	NAS1149F0363P	. Washer	8			X
9*	AN960-10	. Washer (Alternate)	8			X
8**	MS27039-0806	. Screw	8			X
9**	NAS1149FN832P	. Washer	8			X
9**	AN960-8	. Washer (Alternate)	8			X
10	SCEET12	. Duct, 16.0 inches long	1			X
10	SCAT12	. Duct, 16.0 inches long (Alternate)	1			X
11	NAS1922-0350-3	. Clamp	2			X

* 480B S/N 5114 through 5116.

** 480B S/N 5117 and subsequent.

● 480B S/N 5098 only.

† Used with 4199057-1 Air Duct Assembly

‡ Used with 4199057-3 Air Duct Assembly

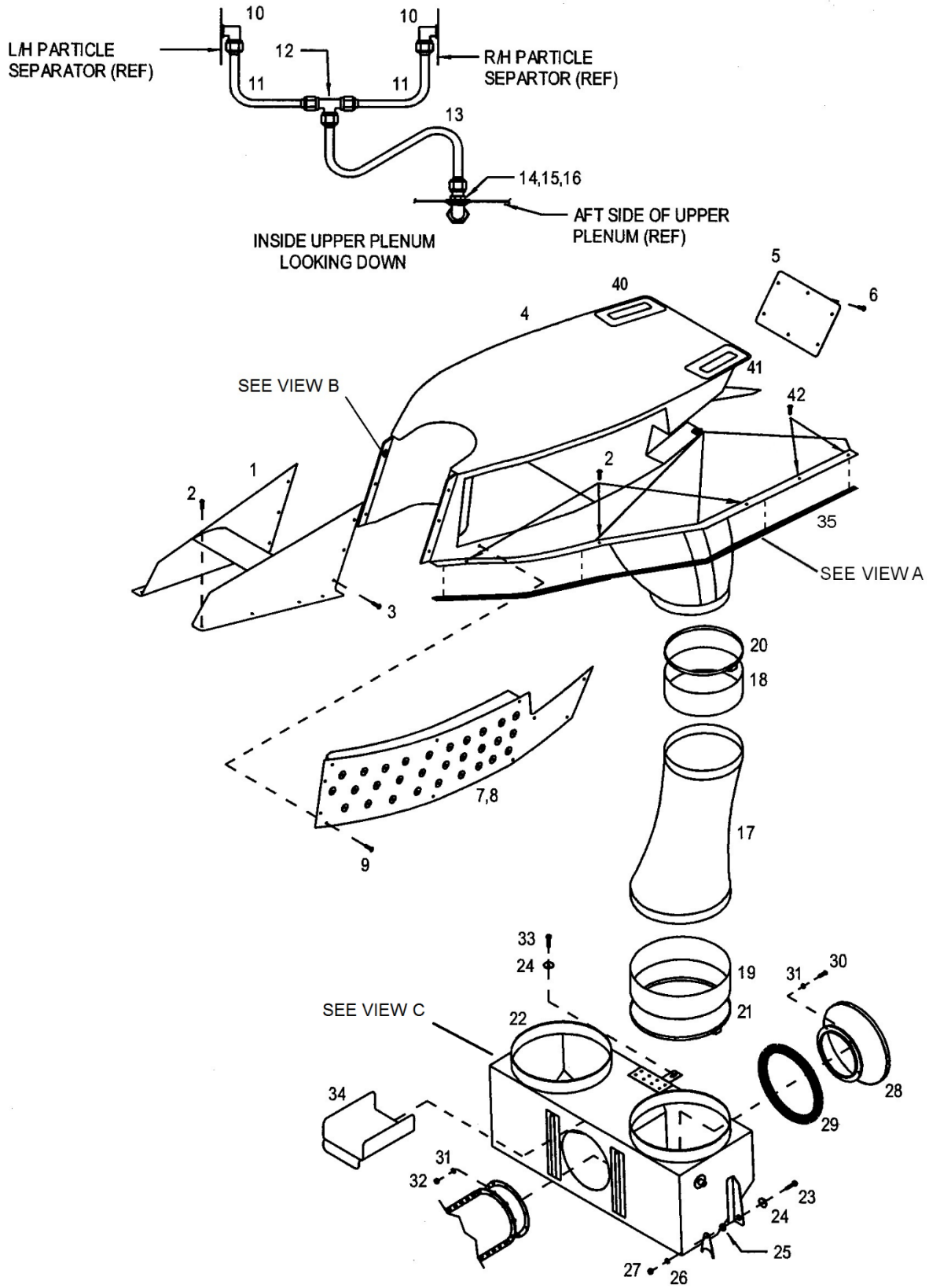

Sheet 1 of 3

FIGURE 6-3. ENGINE AIR INDUCTION SYSTEM

FIGURE 6-3. ENGINE AIR INDUCTION SYSTEM

ITEM NUMBER	PART NUMBER	DESCRIPTION	QTY PER ASSY	EFFECTIVITY		
				TH-28	480	480B
1	4120506-11	. Forward Scoop	1	X	X	X
2	AN525-10R10	. Screw	14	X	X	X
3	AN525-10R7	. Screw	6	X	X	X
–	4508-1	. Foam Tape	A/R	X	X	X
–	4120500-901	. Upper Plenum/Air Inlet Assembly	1	X	X	X
4	4120507-1	. . Plenum Assembly	1	X	X	X
5	4120514-11	. . . Access Door	1	X	X	X
6	AN525-10R6	. . . Screw	6	X	X	X
–†	4508-1	. . . Foam Tape	A/R	X	X	X
7*	ECD4066-1	. . Particle Separator, L/H	1	X		X
7**	ECD4066-3	. . Particle Separator, L/H (Alternate)	1	X	X	X
8*	ECD4066-2	. . Particle Separator, R/H	1	X		X
8**	ECD4066-4	. . Particle Separator, R/H (Alternate)	1	X	X	X
9	AN525-10R7	. . Screw	42	X	X	X
9	AN525-10R7	. . Screw (Used with ECD4066-3 &-4)	22	X	X	
–	4516-75	. . Vinyl Foam Tape	A/R	X	X	X
–	4508-1	. . Foam Tape (Replaced by 4516-75)	A/R	X	X	X
10	MS51527A-6S	. Elbow	2	X	X	X
11	4120515-1	. Line Assembly	2	X	X	X
12	AN824-6J	. Tee	1	X	X	X
13	4120515-3	. Line Assembly	1	X	X	X
14	AN833-6J	. Elbow	1	X	X	X
15	NAS1149F0963P	. Washer	2	X	X	X
15	AN960-916	. Washer (Alternate)	2	X	X	X
16	AN924-6J	. Nut	1	X	X	X
–	4120509-1	. . Duct Assembly	2	X	X	X
–Δ	4120509-3	. . Duct Assembly	1	X	X	X
17	4120509-11	. . . Duct	1	X	X	X
17	4120509-17	. . . Duct (Used with 4120509-3)	1	X	X	X
18	4120516-11	. . . Boot	1	X	X	X
19	4120516-13	. . . Boot	1	X	X	X
20	NAS1922-0700-3	. . Clamp	2	X	X	X
21	NAS1922-0925-3	. . Clamp	2	X	X	X
22††	4120510-905	. . Lower Plenum Assembly (Alternate)	2	X	X	X
22●	4120510-5	. . Lower Plenum Assembly	1	X	X	X
22	4120510-3	. . Lower Plenum Assembly (Superseded by 4120510-5)	1	X	X	X
23	NAS6603-4	. . Bolt	2	X	X	X

FIGURE 6-3. ENGINE AIR INDUCTION SYSTEM

ITEM NUMBER	PART NUMBER	DESCRIPTION	QTY PER ASSY	EFFECTIVITY		
				TH-28	480	480B
23	AN3-5A	. Bolt (Superseded by NAS6603-4)	2	X	X	X
24	AN960-3	. Washer	3	X	X	X
25	AN970-3	. Washer	A/R	X	X	X
26	AN970-3	. . Washer	3	X	X	X
27	MS21042-3	. Nut	2	X	X	X
–	4120532-9	. . Bellmouth Assembly	1	X	X	X
28	369H8011	. . . Bellmouth	1	X	X	X
29	ECD4064-13	. . . Seal	1	X	X	X
30	MS35206-246	. . Screw	5	X	X	X
30	AN515-8R10	. . Screw (Superseded by MS35206-246)	5	X	X	X
31	NAS1149FN832P	. . Washer	5	X	X	X
31	AN960-8	. . Washer (Alternate)	5	X	X	X
32	MS21042-08	. Nut	5	X	X	X
33	NAS6603-1	. . Bolt	1	X	X	X
33	AN3-3A	. . Bolt (Superseded by NAS6603-1)	1	X	X	X
34	4120521-11	. Shield	1	X	X	X
–	4910-50	. . Tape	A/R	X	X	X
35†	4120525-11	. . Spacer (Nitrile rubber, 1/16” or 1.6 mm thick)	2		X	X
35†	4120525-13	. . Spacer (Nitrile rubber, 1/8” or 3.2 mm thick)	2		X	X
36	4120525-15	. . Gasket	2		X	X
37	AN525-10R10	. . Screw, Machine	16		X	X
38	732-RTV	. Sealant: Rubber, Clear Silicone	A/R		X	X
39▼	AN525-10R10	. . Screw, Machine	12		X	X
40††	4119351-15	. Hand Hold Right Side	1		X	X
40	4119351-11	. Hand Hold Right Side (Superseded by 4119351-15)	1		X	X
41††	4119351-17	. Hand Hold Left Side	1		X	X
41	4119351-15	. Hand Hold Left Side (Superseded by 4119351-17 for left side only)	1		X	X
42	AN525-10R12	. . Screw	2	X	X	X
43	NAS1068A3	. . . Nutplate	6	X	X	X
–◊	MS20426A3-3	. . . Rivet	12	X	X	X
44▲	MS21061L3	. . . Nutplate	2	X	X	X
–◊	MS20426A3-3	. . . Rivet	4	X	X	X
45	NAS1474-A3	. . . Nutplate	26	X	X	X
–◊	MS20426A3-3	. . . Rivet	52	X	X	X
46	22NA27-22-02	. . . Nutplate	2	X	X	X
–◊	CR3213-4-03	. . . Rivet	4	X	X	X

FIGURE 6-3. ENGINE AIR INDUCTION SYSTEM

ITEM NUMBER	PART NUMBER	DESCRIPTION	QTY PER ASSY	EFFECTIVITY		
				TH-28	480	480B
47	NAS1474-A3	. . . Nutplate	6	X	X	X
–◊	MS20426A3-3	. . . Rivet	12	X	X	X
48	NAS1068A3	. . . Nutplate	6	X	X	X
–◊	MS20426A3-3	. . . Rivet	12	X	X	X
–	4220037	Engine Wash System	REF	X	X	X
49	4220037-5	. Cap/Lanyard Assembly	1	X	X	X
50	AN832-4D	. Fitting	1	X	X	X
51	AN924-4W	. Nut	1	X	X	X
51	AN924-4D	. Nut (Superseded by AN924-4W)	1	X	X	X
52	MS21919WCJ4	. Clamp	1	X	X	X
53	MS21919WCJ14	. Clamp	1	X	X	X
54	MS35206-245	. Screw	1	X	X	X
55	NAS1149FN816P	. Washer	2	X	X	X
55	AN960-8L	. Washer (Alternate)	2	X	X	X
56	MS21083N08	. Nut	1	X	X	X
56	AN364-832A	. Nut (Superseded by MS21083N08)	1	X	X	X
57	MS20822-4D	. Elbow	1	X	X	X
58	4220037-3	. Tube Assembly	1	X	X	X
–	4220037-15	. . Tube	1	X	X	X
61	AN818-4J	. . Nut	2	X	X	X
61	AN818-4D	. . Nut (Superseded by AN818-4D)	2	X	X	X
62	MS20819-4D	. . Sleeve	2	X	X	X
63	4220037-1	. Nozzle Installation	1	X	X	X
–	4220037-2	. . Nozzle Assembly	1	X	X	X
–	CR3213-4-02	. . Rivet	4	X	X	X
64	AN929A4S	. Cap Assembly	1	X	X	X
65	MS24665-1013	. Cotter Pin	1	X	X	X
66	2/0	. Brass Chain (Links)	9	X	X	X

* Preferred part for TH-28 S/N 3007 and subsequent and 480B S/N 5043 and subsequent.

** Acceptable alternate for TH-28 S/N 3004 - 3006, all 480 models, and 480B S/N 5040 - 5042.

† Thickness as required to ensure a minimum 3.2 mm clearance between the upper plenum/air inlet and the drive belt. Foam tape 4508-1 is not used when the spacer is installed.

● Effectivity 480B S/N 5155 and subsequent. Retrofittable to 480 S/N 5001 and 480B S/N 5042 and subsequent.

†† Effective 480B S/N 5152 the 4119351-15 replaced both 4119351-11 hand holds. Effective 480B S/N 5155 the 4119351-17 replaced the 4119351-15 on the left side of the ship. All dash numbers are retrofittable to 480 S/N 5001 to 5041 and 480B S/N 5042 and subsequent.

∆	One (1) assembly installed on the left side for S/N equipped with air conditioner installation P/N 4220176.
◊	Refer to SDB T-060, latest revision, for nutplate installation requirement.
▲	Effectivity 480B S/N 5242 and subsequent; Eligibility 480/B S/N 5241 and prior (NAS1068-A3 originally installed).
††	Includes engine wash kit nozzle.
▼	Use AN525-10R8 to AN525-10R14 depending on fiberglass thickness.

INTENTIONALLY LEFT BLANK

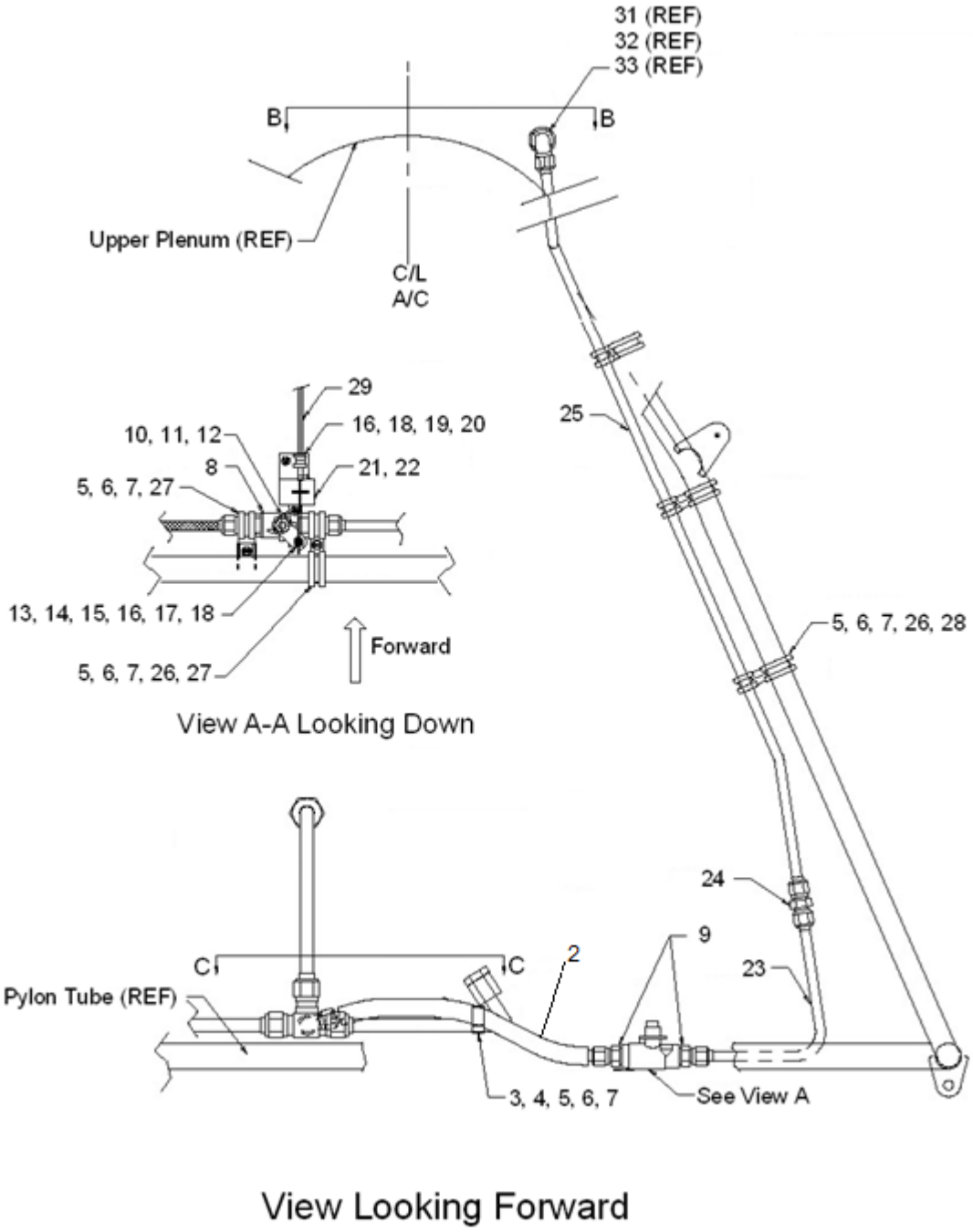

Sheet 1 of 2

FIGURE 6-4. PARTICLE SEPARATOR/SCAV-AIR LINE INSTALLATION

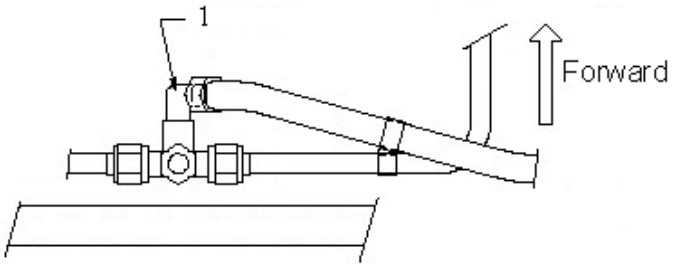

View C-C
Looking Down

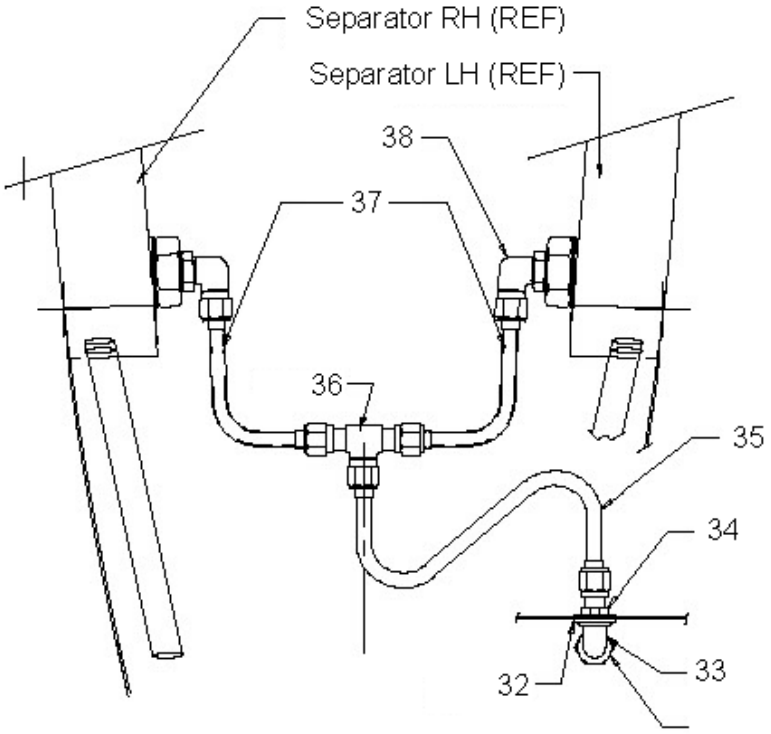

Particle Separator Lines
View B-B
Looking Down

Sheet 2 of 2

FIGURE 6-4 PARTICLE SEPARATOR/SCAV-AIR LINE INSTALLATION

FIGURE 6-4. PARTICLE SEPARATOR/SCAV-AIR LINE INSTALLATION

ITEM NUMBER	PART NUMBER	DESCRIPTION	QTY PER ASSY	EFFECTIVITY		
				TH-28	480	480B
–	4120513-3	Scavenge Air Installation	REF	X	X	X
1	MS51527A6S	.Elbow	1	X	X	X
–	MS28778-6	. O-Ring	A/R	X	X	X
–∞	AN929L8J	. Cap	A/R	X	X	X
2	4120511-1	. Hose Assembly	1	X	X	X
3**	S500-8	. Clamp	1	X	X	X
3	AN742F8	. Clamp (Superseded by S500-8)	1	X	X	X
4*	S500-12	. Clamp	1	X	X	X
4	AN742F10	. Clamp (Superseded by S500-12)	1	X	X	X
5	MS35206-245	. Screw	6	X	X	X
5	AN515-8R8	. Screw (Superseded by MS35206-245)	6	X	X	X
6	NAS1149FN816P	. Washer	14	X	X	X
6	AN960-8L	. Washer (Alternate)	14	X	X	X
7	MS21083N08	. Nut	6	X	X	X
7	AN364-832A	. Nut (Superseded by MS21083N08)	6	X	X	X
7*	MS1042-08	. Nut	6	X	X	X
–	4120036-1	. Valve Assembly Scavenge Air System	1	X	X	X
–	300-097	. Silver Grade Anti-Seize, Loctite	A/R	X	X	X
–	767	. Silver Grade Anti-Seize, Loctite	A/R	X	X	X
8	4120027-1	. . Valve	1	X	X	X
9	6-6FBTX-SS	. . Adapter	2	X	X	X
10	4120025-15	. . Arm	1	X	X	X
11	MS35333-75	. . Washer	1	X	X	X
12	MS35649-2314	. . Nut	1	X	X	X
13†	4122015-23	. . Screw	1	X	X	X
13	4122015-11	. . Screw (Superseded by 4122015-23)	1	X	X	X
14	MS35206-246	. . Screw	1	X	X	X
14	AN515-8R10	. . Screw (Superseded by MS35206-246)	1	X	X	X
15	MS35649-282	. . Nut	1	X	X	X
15	AN340-832	. . Nut (Superseded by MS35649-282)	1	X	X	X
16	NAS1149FN816P	. . Washer	3	X	X	X
16	AN960-8L	. . Washer (Alternate)	3	X	X	X
17	NAS1149FN832P	. . Washer	2	X	X	X
17	AN960-8	. . Washer (Alternate)	2	X	X	X
18	MS21083N08	. . Nut	1	X	X	X
18	AN364-832A	. . Nut (Superseded by MS21083N08)	1	X	X	X
19	MS35206-245	. . Screw	1	X	X	X
19	AN515-8R8	. . Screw (Superseded by MS35206-245)	1	X	X	X

FIGURE 6-4. PARTICLE SEPARATOR/SCAV-AIR LINE INSTALLATION

ITEM NUMBER	PART NUMBER	DESCRIPTION	QTY PER ASSY	EFFECTIVITY		
				TH-28	480	480B
20	MS21919WCJ3	. . Clamp	1	X	X	X
20	MS21919WDG3	. . Clamp (Superseded by MS21919WCJ3)	1	X	X	X
21	4120026-15	. . Bracket	1	X	X	X
21	4120026-13	. . Bracket (Superseded by 4120026-15)	1	X	X	X
22	AN507-1024R7	. . Screw	2	X	X	X
23	4120517-15	. Line Assembly	1	X	X	X
24	AN815-6J	. Union	1	X	X	X
25	4120517-17	. Line Assembly	1	X	X	X
26	MS21919WCJ16	. Clamp	4	X	X	X
26	MS21919WDG16	. Clamp (Superseded by MS21919WCJ16)	4	X	X	X
27●	MS21919WCJ12	. Clamp	3	X	X	X
27	S500-14	. Clamp (Replaced by MS21919WCJ12)	3	X	X	X
27	MS21919WDG14	. Clamp (Superseded by S500-14)	1	X	X	X
28●	MS21919WCJ6	. Clamp	3	X	X	X
28	S500-6	. Clamp (Superseded by MS21919WCJ6)	3	X	X	X
28	MS21919WDG6	. Clamp (Superseded by S500-6)	3	X	X	X
29	4129560-7	. Cable Assembly	1		X	X
29*	A-700	. Cable Assembly	1	X	X	
30	CP25WB+	. Caulk: Barrier, 3M Fire	A/R	X	X	X
31	AN964-6C	. Nut	1		X	X
32**	NAS1149F0963P	. Washer	2		X	X
32**	AN960-916	. Washer (Alternate)	2		X	X
33**▲	AN833-6J	. Fitting	1		X	X
34**	AN924-6J	. Fitting	1		X	X
35**	4120515-7	. Line	1		X	X
36**	AN824-6J	. Fitting	1		X	X
37**	4120515-5	. Line Assembly	2		X	X
38**	MS51527A65	. Fitting	3		X	X

* 480, S/N 5001.

** Effectivity 480/480B S/N 5134 and subsequent.

† Effectivity 480B S/N 5136 and subsequent. Retrofittable to 480 S/N 5000 - 5041 and 480B S/N 5042 and subsequent.

● Effectivity 480B S/N 5255 and subsequent. Retrofittable to 480 S/N 5000 - 5041 and 480B S/N 5042 and subsequent.

▲ Optional to use 6C6-BX-SS.

∞ Use when heater is not installed.

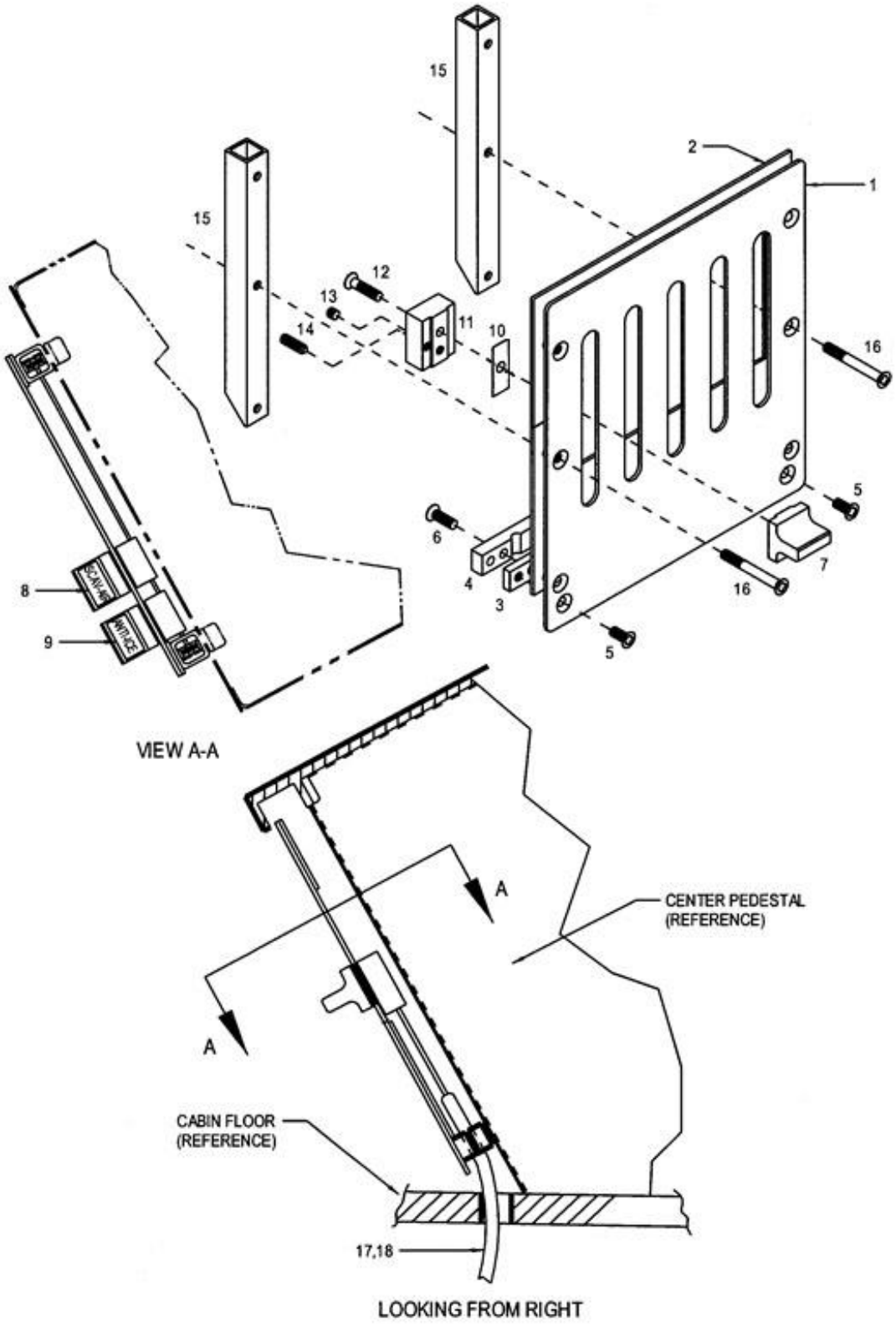

FIGURE 6-5 SCAV-AIR/ANTI-ICE CONTROL PANEL INSTALLATION

FIGURE 6-5 SCAV-AIR/ANTI-ICE CONTROL PANEL INSTALLATION

ITEM NUMBER	PART NUMBER	DESCRIPTION	QTY PER ASSY	EFFECTIVITY		
				TH-28	480	480B
–	4182142-1	. Slider Control Panel Assembly	1		X	X
1	4129534-11	. . Slide Plate	1		X	X
2**	4129538-17	. . Stop Plate	1		X	X
2	4129538-15	. . Stop Plate (Superseded by 4129538-17)	1		X	X
3	4129535-13	. . Cable Block	1		X	X
4	4129535-11	. . Cable Block	1		X	X
5	MS24693-S48	. . Screw	2		X	X
5	AN507-8R6	. . Screw (Superseded by MS24693-S48)	2		X	X
6	MS24693-S48	. . Screw	6		X	X
6	AN507-8R8	. . Screw (Superseded by MS24693-S48)	6		X	X
7*	4129533-11	. . Upper Slide	2		X	X
8	4119894-23	. . Placard (SCAV-AIR)	1		X	X
9	4119894-21	. . Placard (ANTI-ICE)	1		X	X
10	4129533-15	. . Shim	A/R		X	X
11*	4129533-13	. . Slide	2		X	X
12*	MS24694-S7	. . Screw	2		X	X
12*	AN509-8R10	. . Screw (Superseded by MS24694-S7)	2		X	X
–	ECD093-11	. . Stop nut	2		X	X
13*	94355A182	. . Set Screw	2		X	X
13*	90251A190	. . Set Screw (Alternate)	2		X	X
13*	300-166	. . Set Screw (Replaced by 90251A190)	2		X	X
14 *≡	K1A-N	. . Ball Plunger	2		X	X
15	4129549-11	. . Spacer	2		X	X
–	Y9485	. . Tape	A/R		X	X
16	MS24694-S11	. . Screw	6		X	X
16	AN509-8R14	. . Screw (Superseded by MS24694-S11)	6		X	X
17	4129560-7	. Cable Assembly (SCAV-AIR)	1		X	X
18	4129560-9	. Cable Assembly (ANTI-ICE)	1		X	X

* The SCAV-AIR and ANTI-ICE controls are standard equipment for the 480/480B. Adjust the quantities as required if the optional bleed air heater/defroster system and/or the ram air ventilation system are installed.

≡ See Appendix A for equivalent part information.

** Effectivity 480B S/N 5176 and subsequent. Retrofittable to 480 S/N 5001 – 5042, 480B S/N 5042 and subsequent. If helicopter is equipped with heater or defrost option replace 4129538-17 with -19 model. If equipped with both heater and defrost option, replace 4129538-17 with -21 model.

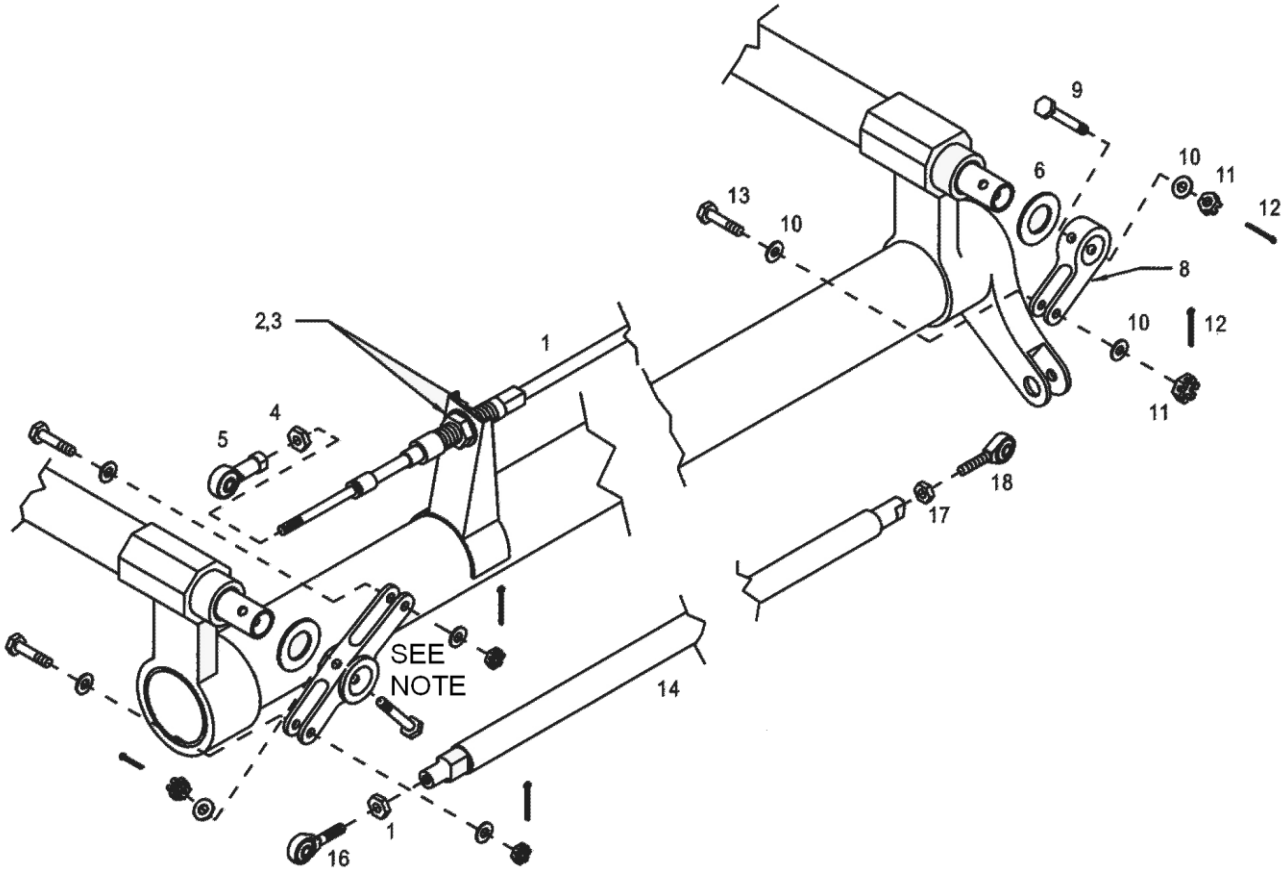

Note: See Figure 9-6 or 9-7.1 Collective Assembly for complete collective installation.

Sheet 1 of 2

FIGURE 6-6 ENGINE POWER CONTROL INSTALLATION

FIGURE 6-7.3 ENGINE IDLE STOP ASSEMBLY – DUAL START CONTROL - RELAY DETAIL

ITEM NUMBER	PART NUMBER	DESCRIPTION	QTY PER ASSY	EFFECTIVITY		
				TH-28	480	480B
10*	JC-D4N-300L	. Relay	1			X
20*	SO-0163-9033	. Relay Socket	1			X
30	M39029/92-536	. Contact Pin	2			X
40	4192514-71	. Solenoid Idle Stop Harness	1			X
50	SE25PFR-MR0	. Braided Expandable Sleeve	18”			X
60	SST1M-MP	. Cable Tie	A/R			X
70	1-480424-0	. Socket Housing	1			X
80	60607-1	. Socket	4			X

* Mounting hardware is provided with these components.

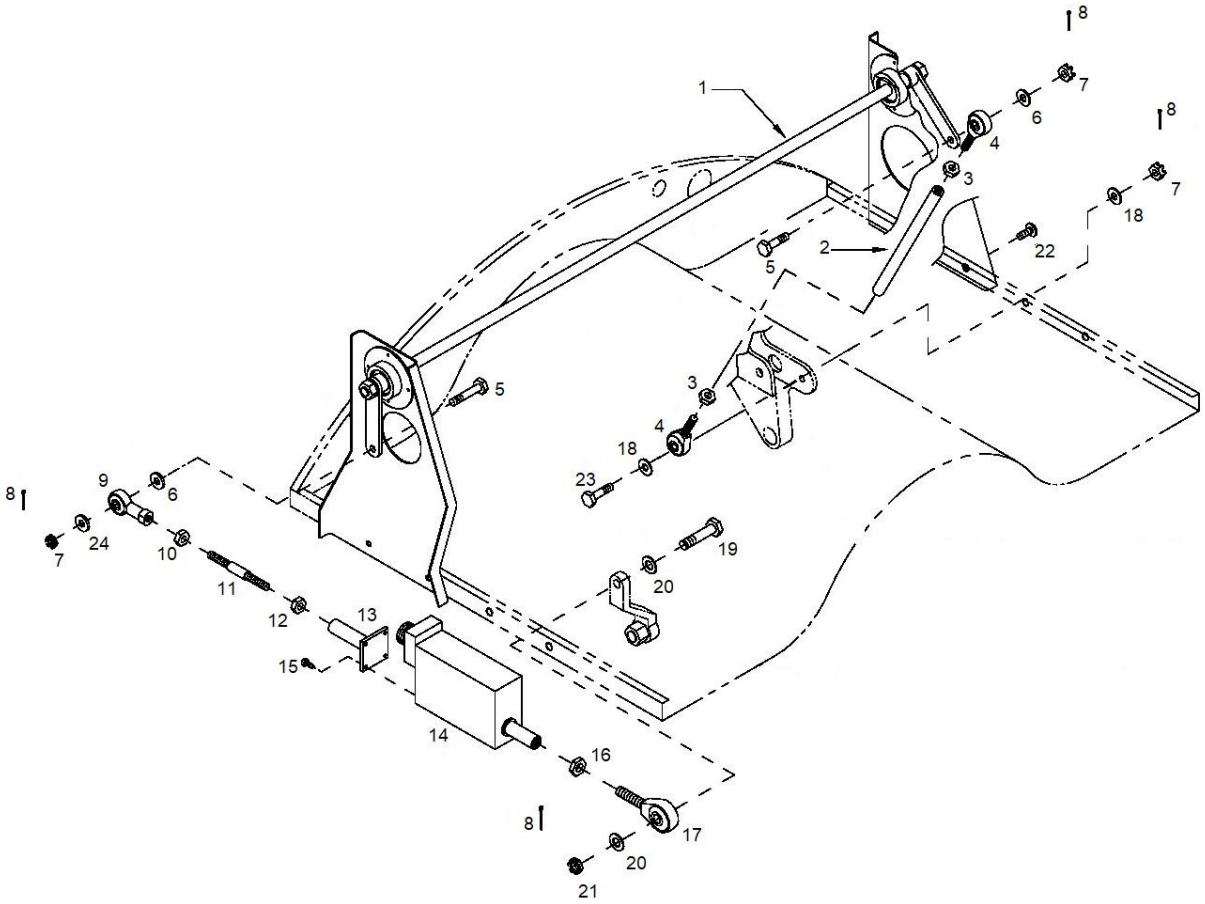

FIGURE 6-8. DROOP COMPENSATOR INSTALLATION

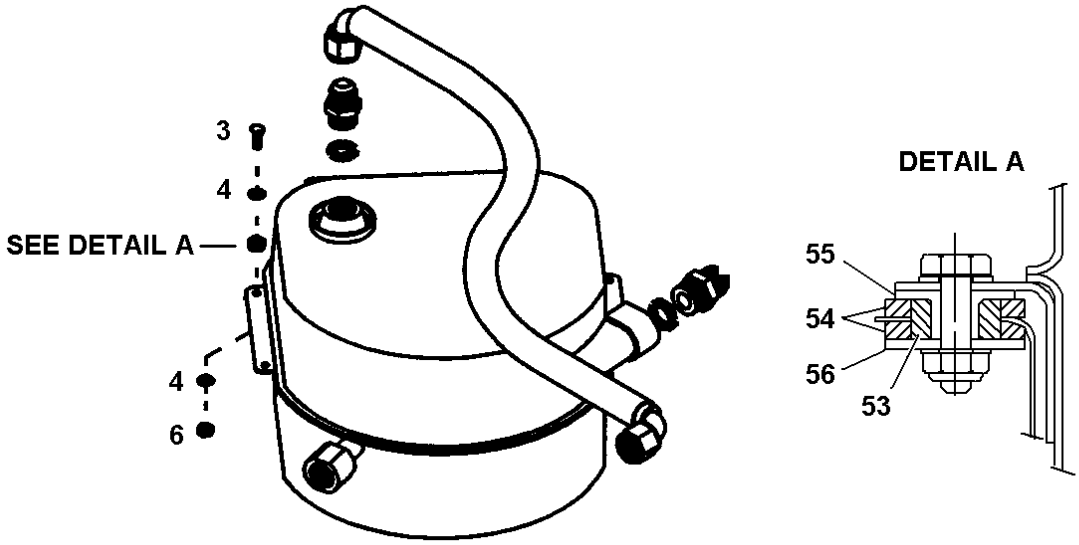

480B: S/N 5088 and subsequent

Sheet 2 of 2

FIGURE 6-9. ENGINE OIL SYSTEM

FIGURE 6-9. ENGINE OIL SYSTEM

ITEM NUMBER	PART NUMBER	DESCRIPTION	QTY PER ASSY	EFFECTIVITY		
				TH-28	480	480B
–	4129100-9	Oil Cooling System Installation	REF			X
–	4129100-902	Oil Tank Assembly	REF			X
1	206-061-505-003	. Oil Tank (Used with 4129100-7)	1	X	X	X
1●	ECD4074-5	. Oil Tank Assembly (Used with 4129100-902)	1			X
1+●	ECD4074-1	. Oil Tank Assembly (Used with 4129100-902) Acceptable alternative to ECD4074-5	1			X
2	436-19	. . Cap Assembly (Used with ECD4074-1)	1	X	X	X
–	MS29561-226	. . . O-Ring	1	X	X	X
–	3519-6	. . . Chain	1	X	X	X
–	416-13	. . . Hook	2	X	X	X
3	NAS66032	. Bolt	4	X	X	X
3	AN3-4A	. Bolt (Superseded by NAS66032)	4	X	X	X
3	NAS6603-6	. Bolt (Used with 4129100-9)	1	X	X	X
3	AN3-6A	. Bolt (Used with 4129100-9) (Superseded by NAS6603-6)	1	X	X	X
4	NAS1149F0332P	. Washer	8	X	X	X
4	AN960-10L	. Washer (Alternate)	8	X	X	X
4	NAS1149F0363P	. Washer (Used with 4129100-9)	1	X	X	X
4	AN960-10	. Washer (Used with 4129100-9) (Alternate)	1	X	X	X
5	AN931-3-5	. Grommet	4	X	X	X
6	MS21044N3	. Nut	4	X	X	X
6	AN365-1032A	. Nut (Superseded by MS21044N3)	4	X	X	X
7	MS28034-3	. Temperature Probe	1	X	X	X
8	MS28778-4	. O-Ring	1	X	X	X
9●●	K010406	. Drain Hose	1	X	X	X
9●	4129100-11	. Drain Hose (Superseded by K010406)	1	X	X	X
10	SST1.5I-MP	. Cable Tie	1	X	X	X
11	AN814-8DL	. Plug	1	X	X	X
12	MS28778-8	. O-Ring	1	X	X	X
13	AN814-6DL	. Plug	1	X	X	X
14	MS28778-6	. O-Ring	1	X	X	X
15††	4129054-29	. Fitting Assembly	1		X	X
15‡	4129054-25	. Fitting Assembly (Superseded by 4129054-29	1	X	X	X
15●●	4129054-13	. Fitting Assembly (Superseded by 4129054-25)	1	X	X	X

FIGURE 6-9. ENGINE OIL SYSTEM

ITEM NUMBER	PART NUMBER	DESCRIPTION	QTY PER ASSY	EFFECTIVITY		
				TH-28	480	480B
15●	4129054-3	. Fitting Assembly (Superseded by 4129054-13)	1	X	X	X
16	MS28778-12	. . O-Ring	1	X	X	X
17††	4129054-31	. Fitting Assembly	1		X	X
17●●	4129054-17	. Fitting Assembly (Superseded by 4129054-31)	1	X	X	X
17●	4129054-7	. Fitting Assembly (Superseded by 4129054-17)	1	X	X	X
18	MS28778-8	. . O-Ring	1	X	X	X
19††	4129054-33	. Fitting Assembly	3		X	X
19●●	4129054-19	. Fitting Assembly (Superseded by 412054-33)	3	X	X	X
19●*	4129054-9	. Fitting Assembly (Superseded by 4129054 -19)	3	X	X	X
20	MS28778-10	. . O-Ring	3	X	X	X
21††	4129054-35	. Fitting Assembly	2		X	X
21●●	4129054-11	. Fitting Assembly (Superseded by 4129054-35)	2	X	X	X
21●	4129054-1	. Fitting Assembly (Superseded by 4129054 -11)	2	X	X	X
22	MS28778-12	. . O-Ring	2	X	X	X
23	6502-12	. Heat Exchanger	1	X	X	X
24	AN814-4DL	. Plug	2	X	X	X
25	MS28778-4	. O-Ring	2	X	X	X
26	4129112-1	. Channel Assembly	1	X	X	X
26	4129112-11	. Channel (Replaced by 4129112-1)	1	X	X	X
27	MS21075L3N	. . Nut Plate	6	X	X	X
27	NAS1068-A3	. . Nut Plate (Replaced by MS21075L3N)	6	X	X	X
28	NAS1097AD3-3	. . Rivet	12	X	X	X
28	MS20426AD3-2	. . Rivet (Replaced by NAS1097AD3-3)	12	X	X	X
29	NAS6603-8	. Bolt	2	X	X	X
29	AN3-7A	. Bolt (Superseded by NAS6603-8)	2	X	X	X
30	NAS1149D0363H	. Washer	2	X	X	X
30	AN960D10	. Washer (Alternate)	2	X	X	X
31	NAS66032	. Bolt	4	X	X	X
31	AN3-4A	. Bolt (Superseded by NAS66032)	4	X	X	X
32	NAS1149F0332P	. Washer	8	X	X	X
32	NAS620-10	. Washer (Replaced by NAS1149F0332P)	8	X	X	X

FIGURE 6-9. ENGINE OIL SYSTEM

ITEM NUMBER	PART NUMBER	DESCRIPTION	QTY PER ASSY	EFFECTIVITY		
				TH-28	480	480B
33	NAS6603-4	. Bolt	1	X	X	X
33	AN3-5A	. Bolt (Superseded by NAS6603-4)	1	X	X	X
34	AD-B283101	. Oil Filter Assembly (APM)	1	X	X	X
35	AC-B283F-107	. . Filter Element	1	X	X	X
36	M83248/1-138	. . O-Ring	1	X	X	X
34**	1740001-01	. Oil Filter Assembly (Purolator/Facet) Fittings supplied with filter.	1	X	X	X
35	038088-08	. . Filter Element	1	X	X	X
35	038088-08-80	. . Filter Element (Alternate)	1	X	X	X
–	1741125	. . Seal Kit	1	X	X	X
37	NAS6604-27	. Bolt	2	X	X	X
37	AN4-21A	. Bolt (Superseded by NAS6604-27)	2	X	X	X
38†	NAS1149D0463H	. Washer	A/R	X	X	X
38†	AN960D416	. Washer (Alternate)	A/R	X	X	X
39	MS21044N4	. Nut	3	X	X	X
39	AN365-428A	. Nut (Superseded by MS21044N4)	3	X	X	X
40	4129124-11	. Bracket	1	X	X	X
41	NAS6604-29	. Bolt	1	X	X	X
41	AN4-22A	. Bolt (Superseded by NAS6604-29)	1	X	X	X
42	MS21044N3	. Nut	1	X	X	X
42	AN365-1032A	. Nut (Superseded by MS21044N3)	1	X	X	X
43	ECD4034-7	. Hose Assembly	1	X	X	X
44	ECD4034-3	. Hose Assembly	1	X	X	X
45	ECD4034-1	. Hose Assembly	1	X	X	X
46	ECD4034-5	. Hose Assembly	1	X	X	X
47	ECD4034-9	. Oil Line Assembly	1	X	X	X
48	MS21919WF18	. Clamp	3	X	X	X
49	MS21919WF14	. Clamp	1	X	X	X
50	AN525-8R7	. Screw	2	X	X	X
51	NAS1149FN816P	. Washer	4	X	X	X
51	AN960-8L	. Washer (Alternate)	4	X	X	X
52	MS21083N08	. Nut	2	X	X	X
52	AN364-832A	. Nut (Superseded by MS21083N08)	2	X	X	X
53	4129136-11	. Isolator	4	X	X	X
54	4129136-13	. Isolator	8	X	X	X
55	4129136-15	. Flanged Spacer	4	X	X	X
56	AN370-3	. Washer	1	X	X	X

FIGURE 6-9. ENGINE OIL SYSTEM

ITEM NUMBER	PART NUMBER	DESCRIPTION	QTY PER ASSY	EFFECTIVITY		
				TH-28	480	480B
57‡	MS20995C32	. Wire: Safety	A/R		X	X
58‡	FIT-221V-1/8	. Shrink Tubing	A/R		X	X

+ Production effectivity 480B, S/N 5088 and subsequent. Retrofittable to all TH-28/480/480B serial numbers.

* Only one (1) fitting is required when oil filter assembly, P/N 1740001-01, is installed.

** Production effectivity TH-28, S/N 3007 & subsequent; 480B, S/N 5044 and subsequent.

† Used as shims.

● Effectivity, 480B S/N 5060 and subsequent. Retrofittable to all TH-28/480/480B serial numbers.

●● Effectivity, 480B S/N 5143 and subsequent.

‡ Effectivity 480B S/N 5155 and subsequent. Retrofittable to 480 S/N 5001 and 480B S/N 5042.

†† Effectivity 480B S/N 5194 and subsequent. Retrofittable to 480 S/N 5001 – 5041 and S/N 5042 and subsequent.

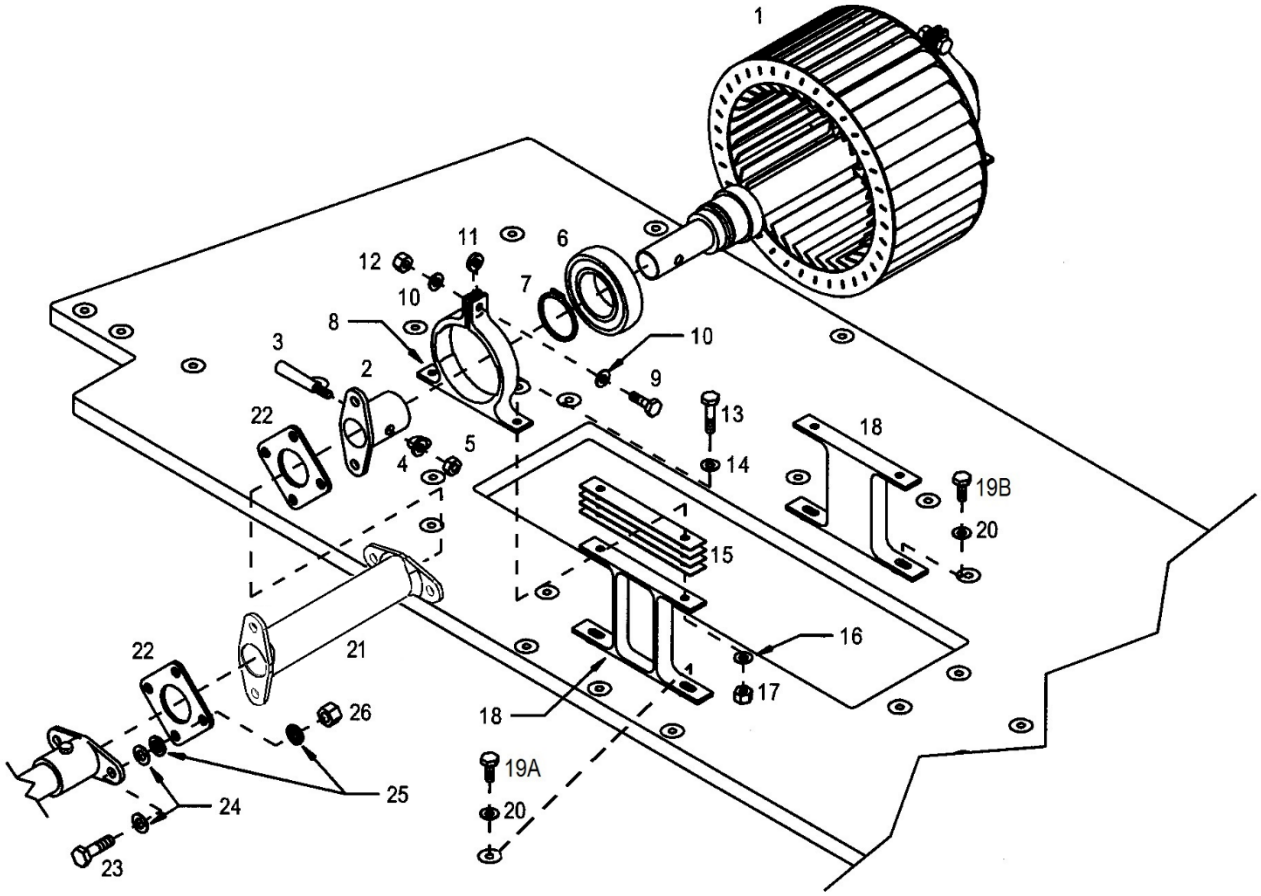

FIGURE 6-10. OIL COOLER BLOWER INSTALLATION

FIGURE 6-10. OIL COOLER BLOWER INSTALLATION

ITEM NUMBER	PART NUMBER	DESCRIPTION	QTY PER ASSY	EFFECTIVITY		
				TH-28	480	480B
–	4129101-905	. Impeller Shaft Assembly (Externally mounted drive coupling) (Superseded by 4129101-9)	1	X	X	
–*	4129101-9	. Impeller Shaft Assembly (A/C Equipped) (Internally mounted drive coupling)	1	X	X	X
–**	4129101-907	. Impeller Shaft Assembly (A/C Equipped) (Externally mounted drive coupling) (Superseded by 4129101-101)	1		X	
–	4129101-101	. Impeller Shaft Assembly (A/C Equipped) (Internally mounted drive coupling) (Superseded by 4129101-105)	1		X	
–+	4129101-105	. Impeller Shaft Assembly (A/C Equipped) (Internally mounted drive coupling. Preferred Part.)	1	X	X	X
–	4129101-103	. Impeller Shaft Assembly (A/C Equipped) (Internally mounted drive coupling) (Alternate for 4129101-105)	1	X	X	X
1	4129101-5	. . Impeller Shaft Assembly (4129101-905)	1	X	X	
1	4129129-1	. . Impeller Shaft Assembly (4129101-9)	1	X	X	X
1	4129101-7	. . Impeller Shaft Assembly (4129101-907)	1		X	
1	4129129-3	. . Impeller Shaft Assembly (4129101-101)	1		X	
1	4129129-5	. . Impeller Shaft Assembly (4129101-103, -105)	1	X	X	X
2	4129126-13	. . . Coupling (4129101-905, -907)	1	X	X	
2	4129126-15	. . . Coupling (4129101-9, -101, -103 ,-105)	1	X	X	X
3	AN386-2-9A	. . . Taper Pin (4129101-905, -907)	1	X	X	
3±	4130541-11	. . . Taper Pin (Alternate to AN386-2-9A)	1	X	X	
3±	4130541-13	. . . Taper Pin (Alternate to AN386-2-9A)	1	X	X	
3◄	4130541-15	. . . Taper Pin (Oversize Ø.3742 in)	1		X	X
3◄	4130541-17	. . . Taper Pin (Oversize Ø.3842 in)	1		X	X
3	AN386-2-8A	. . . Taper Pin (4129101-9, -103, -105)	1	X	X	X
3	AN386-2-8A	. . . Taper Pin (4129101-101)	2		X	
4	NAS1149F0363P	. . . Washer (4129101-905, -907, -9, -103, -105)	1	X	X	X
4	AN960-10	. . . Washer (Alternate) (4129101-905, -907, -9, -103, -105)	1	X	X	X
4	NAS1149F0363P	. . . Washer (4129101-101)	2		X	
4	AN960-10	. . . Washer (Alternate) (4129101-101)	2		X	
4	AN975-3	. . . Washer, Taper Pin	A/R	X	X	X
5	MS21083N3	. . . Nut (4129101-905, -907, -9, -103, -105)	1	X	X	X
5	AN364-1032A	. . . Nut (Superseded by MS21083N3) (4129101-905, -907, -9, -103, -105)	1	X	X	X

FIGURE 6-10. OIL COOLER BLOWER INSTALLATION

ITEM NUMBER	PART NUMBER	DESCRIPTION	QTY PER ASSY	EFFECTIVITY		
				TH-28	480	480B
5	MS21083N3	. . . Nut (4129101-101)	2		X	
5	AN364-1032A	. . . Nut (Superseded by MS21083N3) (4129101-101)	2		X	
6	ECD4011-13	. . Bearing	2	X	X	X
7	N5100-118	. . Retaining Ring	2	X	X	X
8	4129103-11	. . Bearing Housing	2	X	X	X
9	NAS6603D4	. . Bolt	2	X	X	X
9	AN3-5A	. . Bolt (Superseded by NAS6603D4)	2	X	X	X
10	NAS1149F0332P	. . Washer	4	X	X	X
11	4129119-11	. . Spacer	2	X	X	X
12	MS21044N3	. . Nut	2	X	X	X
13	NAS6603-8	. Bolt	4	X	X	X
13	AN3-7A	. Bolt (Superseded by NAS6603-8)	4	X	X	X
14	NAS1149F0332P	. Washer	12	X	X	X
14	AN960-10L	. Washer (Alternate)	12	X	X	X
15	4129117-11	. Shim, .007"	A/R	X	X	X
15	4129117-13	. Shim, .020"	A/R	X	X	X
15	4129117-15	. Shim, .032"	A/R	X	X	X
15	4129117-17	. Shim, .063"	A/R	X	X	X
15	4129117-19	. Shim, .125"	A/R	X	X	X
15	4129117-21	. Shim, .250"	A/R	X	X	X
16	NAS1149F0363P	. Washer	A/R	X	X	X
16	AN960-10	. Washer (Alternate)	A/R	X	X	X
16	NAS1149F0332P	. Washer	A/R	X	X	X
16	AN960-10L	. Washer (Alternate)	A/R	X	X	X
17	MS21044N3	. Nut	4	X	X	X
17	AN365-1032A	. Nut (Superseded by MS21044N3)	4	X	X	X
18	4129104-21	. Bearing Stand	2	X	X	X
19A	NAS6603-4	. Bolt	2	X	X	X
19A	AN3-5A	. Bolt (Superseded by NAS6603-4)	2	X	X	X
19B	NAS6603-12	. Bolt	2	X	X	X
19B	AN3-15A	. Bolt (Replaced by NAS6603-12)	2	X	X	X
20	NAS1149F0332P	. Washer	4	X	X	X
20	AN960-10L	. Washer (Alternate)	4	X	X	X
21●●	4129102-13	. Short Shaft Assembly	1	X	X	X
21∆	4129102-15	. Short Shaft Assembly	1		X	
21†	4129102-105	. Short Shaft Assembly (Superseded by 4129102-15)	1	X	X	X

FIGURE 6-10. OIL COOLER BLOWER INSTALLATION

ITEM NUMBER	PART NUMBER	DESCRIPTION	QTY PER ASSY	EFFECTIVITY		
				TH-28	480	480B
21	4129102-107	. Short Shaft Assembly (Superseded by 4129102-13)	1	X	X	X
22	28-01041-3	. Flex Pack	2	X	X	X
23	NAS6604-7	. Bolt	8	X	X	X
23	AN4-7A	. Bolt (Superseded by NAS6604-7)	8	X	X	X
24	NAS1149F0463P	. Washer	A/R	X	X	X
24	AN960-416	. Washer (Alternate)	A/R	X	X	X
24	NAS1149F0432P	. Washer	A/R	X	X	X
24	AN960-416L	. Washer (Alternate)	A/R	X	X	X
25	28-13621-13	. Flex Coupling Washer	16	X	X	X
26	MS21044N4	. Nut	8	X	X	X
26	AN365-428A	. Nut (Superseded by MS21044N4)	8	X	X	X

*	TH-28, S/N 3007 and subsequent; 480, S/N 5037 through 5041.
**	480, S/N 5022 only.
+	480, S/N 5042 and subsequent.
†	480, S/N 5001 only.
●	Acceptable alternative on 480/480B S/N 5001 – 5060.
●●	480B, S/N 5156 and subsequent.
±	On S/N 5148 and subsequent: If the hole for the taper pin is too deep, use 4130541-11 or 4130541-13 oversized taper pins.
Δ	S/N 5001 only
◀	Customer Service Use only: Eligibility TH-28/480/480B, all S/N.

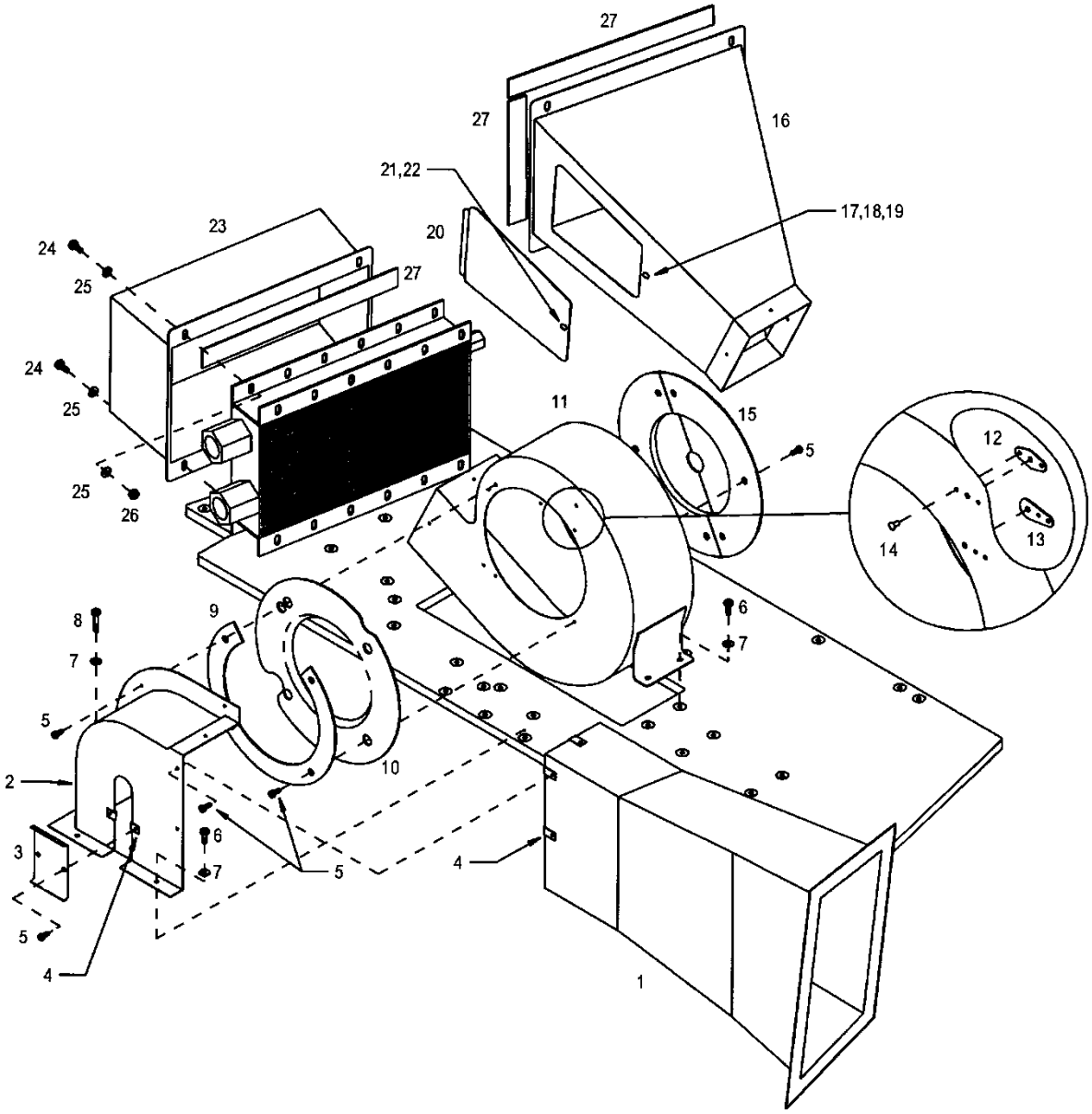

See Figure 6-10 for aircraft retrofitted with latest ducting configuration.

FIGURE 6-11. OIL COOLER DUCTING TH-28 SN 3006, 480 SN 5001-5022

FIGURE 6-11. OIL COOLER DUCTING TH-28 SN 3006, 480 SN 5001-5022

ITEM NUMBER	PART NUMBER	DESCRIPTION	QTY PER ASSY	EFFECTIVITY		
				TH-28	480	480B
1	4129107-13	. Inlet Duct	1	X	X	
2	4129108-11	. Center Duct	1	X	X	
3	4129108-15	. Closeout	1	X	X	
4 ≡	A01789-8Z-1D	. Nut, Tinnerman	5	X	X	
5	NAS1101-08-6	. Screw	21	X	X	
5	AN503-8-6	. Screw (Superseded by NAS1101-08-6)	21	X	X	
6	MS27039-1-08	. Screw	9	X	X	
7	NAS1149F0332P	. Washer	5	X	X	
7	AN960-10L	. Washer (Alternate)	5	X	X	
8	MS27039-1-14	. Screw	1	X	X	
9	4129125-15	. Support Ring	1	X	X	
10	4129125-17	. Bell Mouth	1	X	X	
11	4129111-1	. Fan Shroud	1	X	X	
12 ≡	A06195-8Z-1D	. . Nut, Tinnerman	6	X	X	
13 ≡	A06194-8Z-1D	. . Nut, Tinnerman	12	X	X	
14	MS20426A3-3	. . Rivet	32	X	X	
15	4129125-11	. Plate	1	X	X	
16	4129121-1	. Duct Assembly	1	X	X	
17	4129120-13	. . Shim	1	X	X	
18	1219-4200-Z3Y	. . Spring, Stud Fastener	1	X	X	
19	MS20426AD3-5	. . Rivet	2	X	X	
20	4129120-1	. . Cover Assembly	1	X	X	
21	AJW4-30	. . . Stud	1	X	X	
22	GA4-250	. . . Grommet	1	X	X	
23	4129113-1	. Exit Duct Assembly	1	X	X	
24	NAS66032	. Bolt	8	X	X	
24	AN3-4A	. Bolt (Superseded by NAS66032)	8	X	X	
25	NAS1149F0332P	. Washer	12	X	X	
25	AN960-10L	. Washer (Alternate)	12	X	X	
26	MS21083N3	. Nut	8	X	X	
26	AN364-1032A	. Nut (Superseded by MS21083N3)	8	X	X	
27	4508-1	. Foam Tape	A/R	X	X	

≡ See Appendix A for equivalent part information.

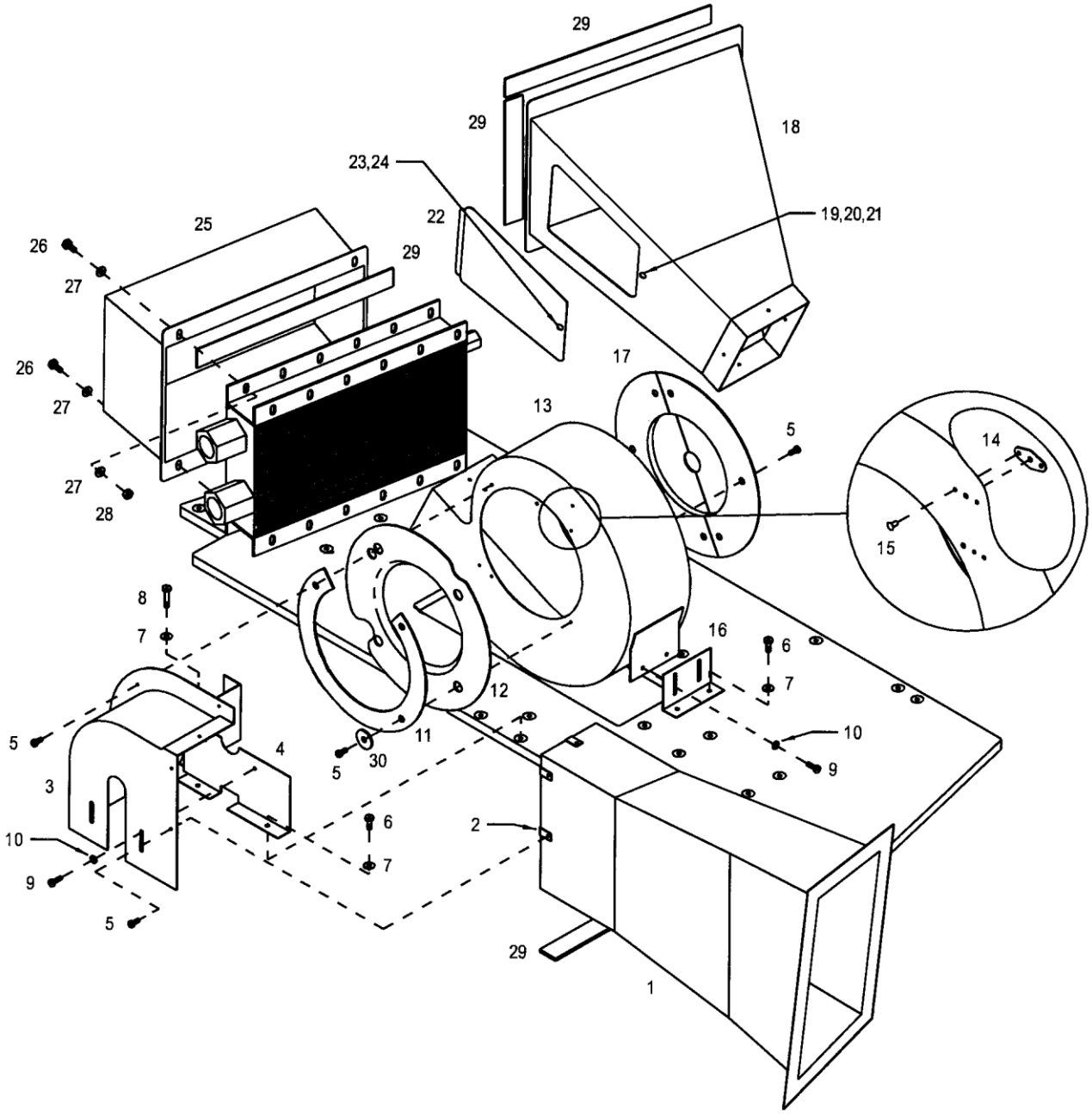

FIGURE 6-12. OIL COOLER DUCTING TH-28 S/N 3007, 480 S/N 5023 AND SUBS

FIGURE 6-12. OIL COOLER DUCTING TH-28 S/N 3007, 480 S/N 5023 AND SUBS

ITEM NUMBER	PART NUMBER	DESCRIPTION	QTY PER ASSY	EFFECTIVITY		
				TH-28	480	480B
1	4129107-13	. Inlet Duct	1	X	X	X
2 ≡	A01787-8Z-1D	. Nut, Tinnerman	3	X	X	X
3	4129108-13	. Center Duct	1	X	X	X
4	4129116-1	. Flange Assembly	1	X	X	X
–	NAS686A08K	. . Nutplate	2	X	X	X
–	NAJ1-82	. . Nutplate (Superseded by NAS686A08K)	2	X	X	X
–	MS20426AD3-3.5	. . Rivet	4	X	X	X
–	MS20426AD3-3	. . Rivet (Superseded by MS20426AD3-3.5)	4	X	X	X
5	NAS1101-08-6	. Screw	19	X	X	X
5	AN503-8-6	. Screw (Superseded by NAS1101-08-6)	19	X	X	X
6**	MS35207-263	. Screw: Machine (Phillips Pan Head), 10-32 X 0.500	4	X	X	X
6	MS27039-1-08	. Screw (Superseded by MS35207-263)	4	X	X	X
7	NAS1149F0332P	. Washer	5	X	X	X
7	AN960-10L	. Washer (Alternate)	5	X	X	X
8	MS27039-1-14	. Screw	1	X	X	X
9**	MS35206-245	. Screw: Machine (Phillips Pan Head), 8-32 X 0.500	4	X	X	X
9	AN526-832R8	. Screw (Superseded By MS35206-245)	4	X	X	X
10	NAS1149FN816P	. Washer	4	X	X	X
10	AN960-8L	. Washer (Alternate)	4	X	X	X
11	4129125-15	. Support Ring	1	X	X	X
12	4129125-17	. Bell Mouth	1	X	X	X
13	4129111-3	. Fan Shroud Housing Assembly	1	X	X	X
14	A06191-8Z-1D	. . Nut, Tinnerman	16	X	X	X
14 ≡	A06195-8Z-1D	. . Nut, Tinnerman (Replaced by A06191-8Z-1D)	16	X	X	X
15	MS20426A3-3	. . Rivet	32	X	X	X
16	4129118-15	. Angle	1	X	X	X
17	4129125-11	. Plate	1	X	X	X
18	4129121-1	. Duct Assembly	1	X	X	X
19	4129120-13	. . Shim	1	X	X	X
20	1219-4200-Z3Y	. . Spring, Stud Fastener	1	X	X	X
21	MS20426AD3-5	. . Rivet	2	X	X	X
22	4129120-1	. . Cover Assembly	1	X	X	X
23	AJW4-30	. . . Stud	1	X	X	X
24	GA4-250	. . . Grommet	1	X	X	X
25	4129113-1	. Exit Duct Assembly	1	X	X	X

FIGURE 6-12. OIL COOLER DUCTING TH-28 S/N 3007, 480 S/N 5023 AND SUBS

ITEM NUMBER	PART NUMBER	DESCRIPTION	QTY PER ASSY	EFFECTIVITY		
				TH-28	480	480B
25*	4129113-7	. Oil Cooler Exit Duct	1			X
25*	4129113-3	. Exit Duct Assembly (Superseded by 4129113-7)	1			X
26	NAS66032	. Bolt	4	X	X	X
26	AN3-4A	. Bolt (Superseded by NAS66032)	4	X	X	X
27	NAS620-10	. Washer	6	X	X	X
27	AN960-10L	. Washer (Superseded by NAS620-10)	12	X	X	X
28	MS21083N3	. Nut	4	X	X	X
28	AN364-1032A	. Nut (Alternate)	4	X	X	X
29	4508-1	. Foam Tape	A/R	X	X	X
30	AN970-3	. Washer	3	X	X	X
30	1/4 Harper	. Washer, Flat (Alternate)	3	X	X	X

* Effective 480B, S/N 5114 and subsequent and 480B equipped with Increased Cooling Kit, P/N 4230031.

≡ See Appendix A for equivalent part information.

** Effectivity 480B S/N 5160 and subsequent. Retrofittable to 480 S/N 5001 to 5041 and 480B S/N 5042 and subsequent.

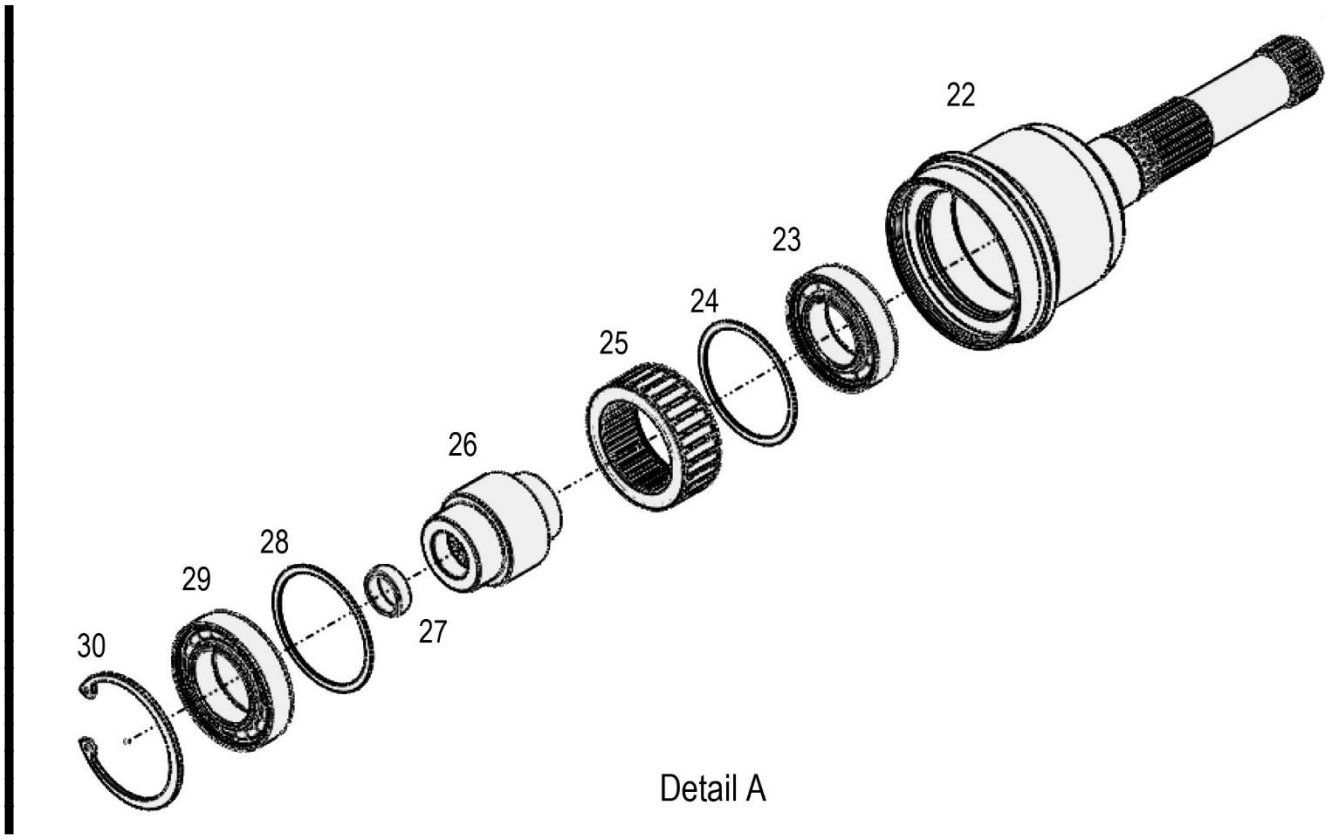

FIGURE 7-1. OVERRUNNING CLUTCH ASSEMBLY

FIGURE 7-1. OVERRUNNING CLUTCH ASSEMBLY

ITEM NUMBER	PART NUMBER	DESCRIPTION	QTY PER ASSY	EFFECTIVITY		
				TH-28	480	480B
1	4131001-131	. Overrunning Clutch Assembly/Installation	1		X	X
1†	4131001-105	. Overrunning Clutch Assembly (Superseded by 4131001-131)	1		X	X
2	14809	. . Seal	1		X	X
2	CRWI14809	. . Seal (Superseded by 14809)	1		X	X
3●	4131001-129	. . Bearing Housing Assembly, with Clutch Vent (Used with 4131001-131)	1		X	X
3	4131006-25	. . . Housing, Bearing (Standard)	1		X	X
3*	4131006-31	. . . Housing, Bearing (Offset 0.002, 150°, 2 Notches)	A/R		X	X
3*	4131006-33	. . . Housing, Bearing (Offset 0.002, 210°, 2 Notches)	A/R		X	X
3	4131006-35	. . . Housing, Bearing (Offset 0.002, 270°, 2 Notches)	A/R		X	X
3	4131006-37	. . . Housing, Bearing (Offset 0.002, 330°, 2 Notches)	A/R		X	X
3**	4131006-45	. . . Housing, Bearing (Offset 0.003, 210°, 3 Notches)	A/R	X	X	X
4	4131005-35	. . . Shim, .001"	A/R		X	X
4	4131005-37	. . . Shim, .005"	A/R		X	X
5	ECD4014-11	. . . Bearing Set	1		X	X
6	VH-218	. . . Retaining Ring	1		X	X
7	N5100-137-S-PP	. . . Retaining Ring	1		X	X
8	2-141	. . . O-Ring (N674-70 Material)	1		X	X
9	4131008-15	. . Cap	1		X	X
10	2-041	. . O-Ring (N674-70)	1		X	X
11	S83BZ-2	. . Sight Plug	1		X	X
12	M25988/1-906	. . O-Ring	1		X	X
13	AN814-2DL	. . Plug	3		X	X
14 ≡	NAS1612-2A	. . O-Ring	3		X	X
15	VH-337	. . Retaining Ring	1		X	X
16	23053995	. . Gasket	1		X	X
17‡	NAS1149C0432R	. Washer	6		X	X
17	AN960-416	. Washer (Superseded by NAS1149C0432R)	6		X	X
18	MS21042-4	. Nut	6		X	X
19	4131005-25	. Shim, .050"	1		X	X
20	4131005-27	. Shim, .001"	A/R		X	X
20	4131005-29	. Shim, .010"	A/R		X	X
21	N5100-78-S-PP	. Retaining Ring	1		X	X

FIGURE 7-1. OVERRUNNING CLUTCH ASSEMBLY

ITEM NUMBER	PART NUMBER	DESCRIPTION	QTY PER ASSY	EFFECTIVITY		
				TH-28	480	480B
–**	4230001-1	Kit Clutch Vent Reservoir Kit (Contains 4130001-129 and 4131006-45)	A/R	X	X	X
22	4131002-15	. Shaft	1			X
23	ECD4015-11	. Bearing	1			X
24	4131005-13	. Shim (0.001”)	A/R			X
24	4131005-15	. Shim (0.005”)	A/R			X
24	4131005-17	. Shim (0.010”)	A/R			X
24	4131005-31	. Shim (0.050”)	A/R			X
25	CL42498	. Sprag Retainer Assembly	1			X
26	4131004-15	. Inner Race	1			X
27	4131009-13	. Pilot Bushing	1			X
28	4131005-13	. Shim (0.001”)	A/R			X
28	4131005-15	. Shim (0.005”)	A/R			X
28	4131005-17	. Shim (0.010”)	A/R			X
28	4131005-31	. Shim (0.050”)	A/R			X
29	ECD4016-11	. Bearing	1			X
30	N500-268-S-PP	. Snap Ring	1			X

≡ See Appendix A for equivalent part information.

● Vented housing for use with Clutch Vent Reservoir Assembly (See Figure 7-1.1)

* Effectivity 480B S/N 5143 and subsequent. Applicable to 480 S/N 5001 to 5041 and 480B S/N 5042 and subsequent.

† Effectivity 480B S/N 5168 and subsequent. Retrofittable to 480 S/N 5001 to 5041 and 480B S/N 5042 and subsequent.

** For use with all TH-28 ships and engines requiring an offset bearing housing

‡ Effectivity 480B S/N 5207 and subsequent. Retrofittable to 480 S/N 5001 – 5041 and 480B S/N 5042 and subsequent.

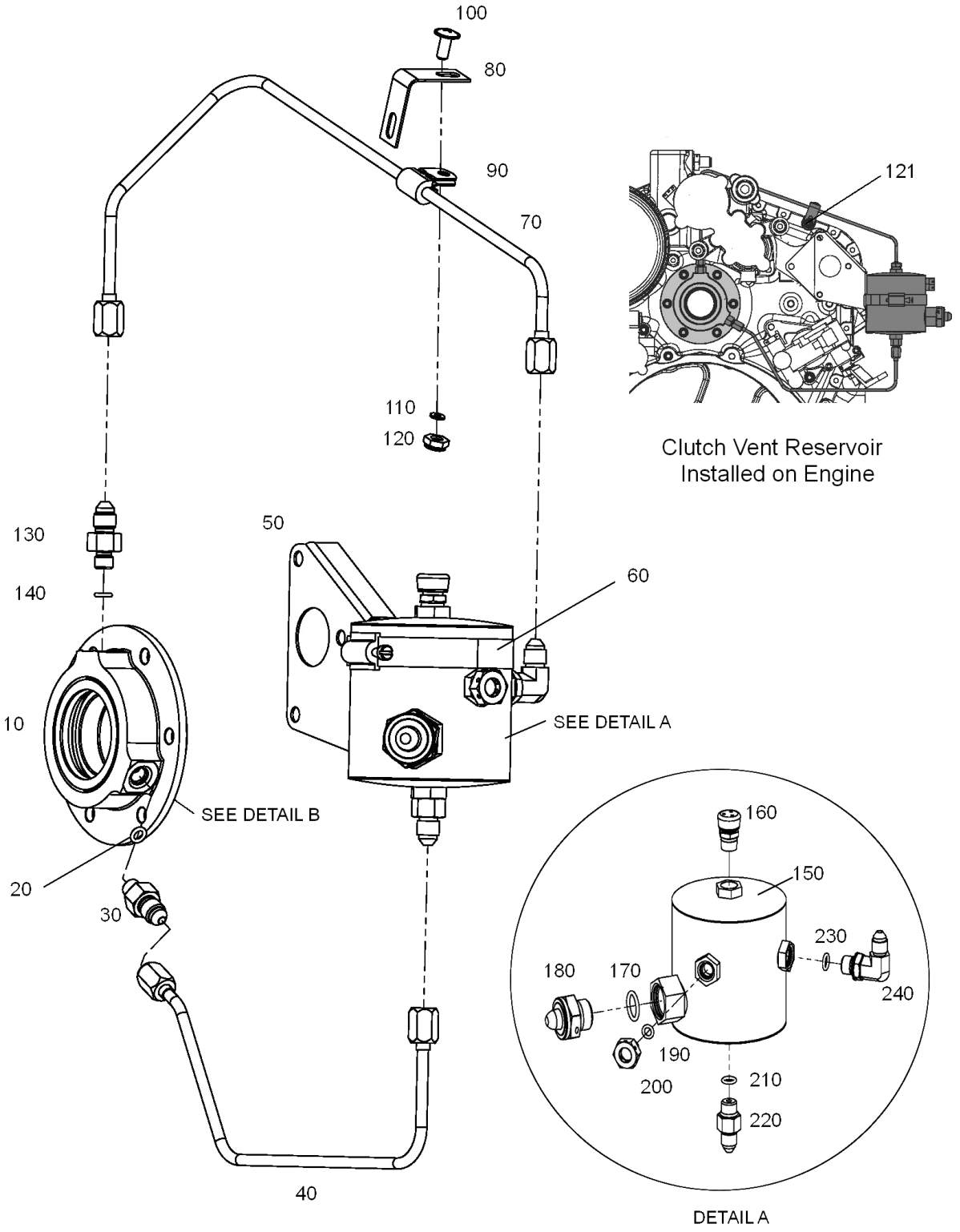

Sheet 1 of 2

FIGURE 7-1.1 CLUTCH VENT RESERVOIR ASSEMBLY

FIGURE 7-8. MAIN ROTOR TRANSMISSION ASSEMBLY (KEYED PINION)

ITEM NUMBER	PART NUMBER	DESCRIPTION	QTY PER ASSY	EFFECTIVITY		
				TH-28	480	480B
–	4130020-103	. Main Rotor Transmission Assembly	1	X	X	
–*	4130020-101	. Main Rotor Transmission Assembly (Alternate)	1	X	X	
–*	4130020-7	. Main Rotor Transmission Assembly (Alternate)	1	X	X	
–*	4130020-1	. Main Rotor Transmission Assembly (Alternate)	1	X	X	
–	4130060-107	. Main Rotor Transmission Assembly (See Figure 7-9 for Filtration/Cooling System Installation)	1			X
–**	4130060-103	. Main Rotor Transmission Assembly (See Figure 7-9 for Filtration/Cooling System Installation) Inactive	1			X
–	4130060-3	. Main Rotor Transmission Assembly (See Figure 7-9 for Filtration/Cooling System Installation) Inactive	1			X
–	4130030-1	. Main Rotor Transmission Assembly (See Figure 7-9 for Filtration/Cooling System Installation) (Superseded by 4130060-3) Inactive	1			X
1	AN900-6	. . Gasket	1	X	X	X
2	AN814-5DL	. . Plug	1	X	X	X
3†	AN932-3D	. . Plug	2	X	X	
4	MS35769-11	. . Gasket, Metallic	1	X	X	
5	1B7536	. . Chip Detector Assembly	1	X	X	
–	M83248/1-011	. . . O-Ring	1		X	
–	AN6227-6	. . . O-Ring (Superseded by M83248/1-011)	1	X	X	
–	21FA-540	. . . Nut	1	X	X	
6	MS35769-6	. . Gasket, Metallic	1	X	X	X
7	28-13120-1	. . Fitting Adapter	1	X	X	X
8	AN4076-1	. . Fitting Element Temp, Cylinder Head	1	X	X	X
9	AN816-6D	. . Adapter	1	X	X	X
10	MS20822-6D	. . Elbow	1	X	X	X
11‡	4130015-3	. . Line Assembly	1		X	X
11	4130015-1	. . Line Assembly (Superseded by 4130015-3)	1		X	X
–	28-13146-1	. . Vent Assembly	1	X	X	X
12	28-13148-1	. . . Vent Fitting	1	X	X	X
13	28-13149-1	. . . Line Assembly	1	X	X	X
14	35574	. . Tube, Filler, Oil	1	X	X	X
15	4142008-11	. . Cap, Gearbox Oil Fill	1	X	X	X
16	M83248/1-911	. . O-Ring (Used with 2D8934)	1	X	X	X

FIGURE 7-8. MAIN ROTOR TRANSMISSION ASSEMBLY (KEYED PINION)

ITEM NUMBER	PART NUMBER	DESCRIPTION	QTY PER ASSY	EFFECTIVITY		
				TH-28	480	480B
16	MS28778-8	. . O-Ring (Used with 2D7310)	1	X	X	X
17◊	2D8934	. . Plug Sight	1	X	X	X
17	2D7310	. . Plug Sight	1	X	X	X
–	MS20995C32	. . Safety Wire	A/R	X	X	X
18	28-13107-15	. . Gasket: Port, Inspection	1	X	X	X
18	4130021-21	. . Gasket (Obsolete Superseded by 28-13107-15)	1	X	X	
18	4130021-25	. . Gasket (Obsolete)	1			X
19	4130021-15	. . Cover Plate (Obsolete)	1	X	X	
19	4130021-23	. . Cover Plate MRGB	1			X
20	AN960-416	. . Washer	2	X	X	X
21	AN935-416L	. . Lock Washer	2	X	X	X
22	AN4-3A	. . Bolt	2	X	X	X
23	MS28778-4	. . O-Ring	1			X
24	MS51525B4S	. . Fitting	1			X
25	13241-LDS	. . Seal (Upper Mast) Used with 4130020-1, -7, & -101)	1	X	X	
25	34256	. . Seal, Oil (Upper Mast) (Used with 4130020-103, 4130060-3, & 4130060 -107)	1	X	X	X
26	28-13137-11	. . Slinger (Used with 4130020-1, -7, & -101)	1	X	X	
26	4130052-11	. . Slinger (Used with 4130020-103 & 4130060-3)	1	X	X	X
26	4130052-13	. . Slinger (Alternate for 4130052-11 and used on 4130060-107)	1	X	X	X
27	1102	. . Seal (Pinion)	1	X	X	X
28	VH-375	. . Retaining Ring	1	X	X	X
–♦	8473RUPH5-L16	. . Seal (Mast, Lower)	2	X	X	X
–♦	1540	. . Seal (Mast, Lower, Alternate)	2	X	X	X
29	28-14368-2	. . Plug	2	X	X	X
–	MS28778-10	. . . O-Ring	1	X	X	X
30	4192509-901	. . Magnetic Pickup, 1.5 inch thread length with connector plug	2	X	X	X
30	726621	. . Magnetic Pickup, 1.5 inch thread length	2	X	X	X
30	3025A17	. . Magnetic Pickup (Alternate)	2	X	X	X
30	3025A35	. . Magnetic Pickup, 3.5 inch thread length (Alternate to 726621)	2	X	X	X
31	28-13152-13	. . Jam Nut (Used with 3025A35)	2	X	X	X
–	28-13152-11	. . Spacer (Used with 3025A35)	2	X	X	X
32	28-16524-3	. . Shim, .020"	A/R	X	X	X
32	28-16524-5	. . Shim, .005"	A/R	X	X	X

FIGURE 7-8.1. MAIN ROTOR TRANSMISSION ASSEMBLY (SPLINED PINION)

ITEM NUMBER	PART NUMBER	DESCRIPTION	QTY PER ASSY	EFFECTIVITY		
				TH-28	480	480B
–	4130060-109	. Main Rotor Transmission Assembly (See Figure 7-9 for Filtration/Cooling System Installation)	REF			X
–♦	4130060-115	. . Main Rotor Transmission Sub-Assembly	1			X
–*	4130060-105	. Main Rotor Transmission Assembly (See Figure 7-9 for Filtration/Cooling System Installation) Inactive	REF			X
–	4130060-101	. Main Rotor Transmission Assembly (See Figure 7-9 for Filtration/Cooling System Installation) Inactive	REF			X
–	4130060-9	. Main Rotor Transmission Assembly (Alternate) See Figure 7-9 for Filtration/ Cooling System Installation (Inactive)	REF			X
1	AN900-6	. . Gasket	1			X
2	AN814-5DL	. . Plug	1			X
3	MS35769-6	. . Gasket, Metallic	1			X
4	28-13120-1	. . Fitting Adapter	1			X
5	AN4076-1	. . Fitting Element Temp, Cylinder Head	1			X
6	AN816-6D	. . Adapter	1			X
7	MS20822-6D	. . Elbow	1			X
8**	4130015-3	. . Line Assembly	1			X
8	4130015-1	. . Line Assembly (Superseded by 4130015-3)	1			X
–	28-13146-1	. . Vent Assembly	1			X
9	28-13148-1	. . . Vent Fitting	1			X
10	28-13149-1	. . . Line Assembly	1			X
11	35574	. . Oil Fill Neck	1			X
12	4142008-11	. . Cap, Gearbox Oil Fill	1			X
13	M93248/1-911	. . O-Ring (Used with 2D8934)	1			X
13	MS28778-8	. . O-Ring (Used with 2D7310)	1			X
14▲	2D8934	. . Plug, Sight	1			X
14	2D7310	. . Plug, Sight	1			X
–	MS20995C32	. . Safety Wire	A/R			X
15	28-13107-15	. . Gasket; Port, Inspection	1			X
15	4130021-25	. . Gasket (Obsolete replaced with 28-13107-15)	1			X
16	4130021-23	. . Cover Plate MRGB	1			X
17	AN960-416	. . Washer	2			X
18	AN935-416L	. . Lock Washer	2			X
19	AN4-3A	. . Bolt	2			X

FIGURE 7-8.1. MAIN ROTOR TRANSMISSION ASSEMBLY (SPLINED PINION)

ITEM NUMBER	PART NUMBER	DESCRIPTION	QTY PER ASSY	EFFECTIVITY		
				TH-28	480	480B
20	MS28778-4	. . O-Ring	1			X
21	MS51525B4S	. . Fitting	1			X
22	34256	. . Seal, Oil (Upper Mast)	1			X
23	4130052-13	. . Slinger	1			X
24	1102	. . Seal (Pinion)	1			X
25	VH-375	. . Retaining Ring	1			X
–†	8473H5L16	. . Seal (Mast, Lower)	2			X
–†	1540	. . Seal (Mast, Lower, Alternate)	2			X
26	28-14368-2	. . Plug	2			X
–	MS28778-10	. . . O-Ring	1			X
27	4192509-901	. . Magnetic Pickup, 1.5 inch thread length with connector plug	2			X
27	726621	. . Magnetic Pickup, 1.5 inch thread length	2			X
27	3025A17	. . Magnetic Pickup (Alternate)	2			X
27	3025A35	. . Magnetic Pickup, 3.5 inch thread length (Alternate to 726621)	2			X
28	28-13152-13	. . Jam Nut (Used with 3025A35)	2			X
–	28-13152-11	. . Spacer (Used with 3025A35)	2			X
29	28-16524-3	. . Shim, .020"	A/R			X
29	28-16524-5	. . Shim, .005"	A/R			X
30	MS28778-4	. . O-Ring	2			X
–	MS20995C32	. . Safety Wire	A/R			X
31	4130533-1	. . Tail Rotor Coupling	1			X
32	4130533-15	. . Washer	1			X
33	AN5-4A	. . Bolt	1			X
34	AA86146	. Temperature Probe (Alternate)	1			X
34	AN5546-1	. Temperature Probe (Alternate)	1			X
34	102-00007	. CHT RTD Probe (Alternate)	1			X
35	K010-0406	. Clear PVC Tube	A/R			X
36	PLB2S-CO	. Cable Tie	1			X

* Used on 480B, S/N 5114 and subsequent and 480B equipped with Increased Cooling Kit, P/N 4230031.

** Effectivity 480B S/N 5203 and Subsequent. Retrofittable to 480B S/N 5042 and subsequent.

† See figure 7-8.2 for illustration.

♦ Order 4130060-115-R for exchange/overhaul transmission (excludes cooling installation, and bearing housing, and pulley assemblies). Include bearing housing (Item 9, Figure 7-6.1) with the returned transmission.

▲ Used with 4130005-101 gearbox housing. Effective S/N 5112 and subsequent.

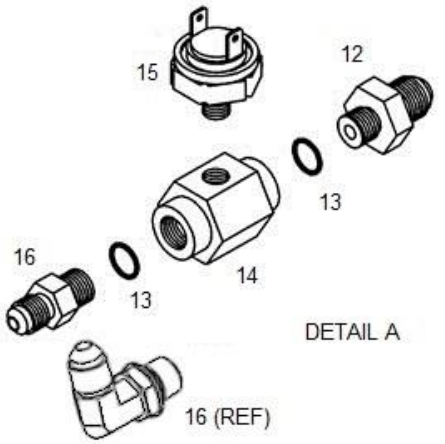

DETAIL A

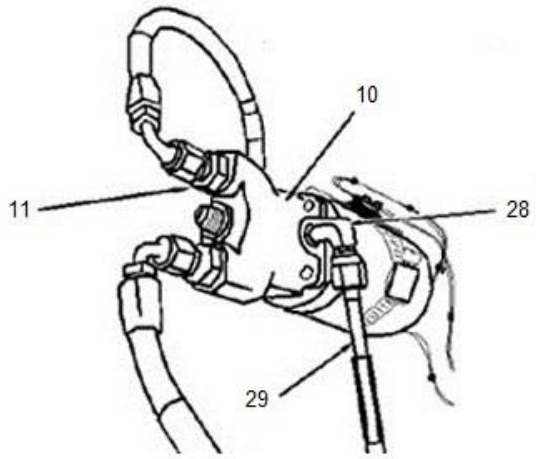

DETAIL C

(S/N 5114 THROUGH S/N 5245)

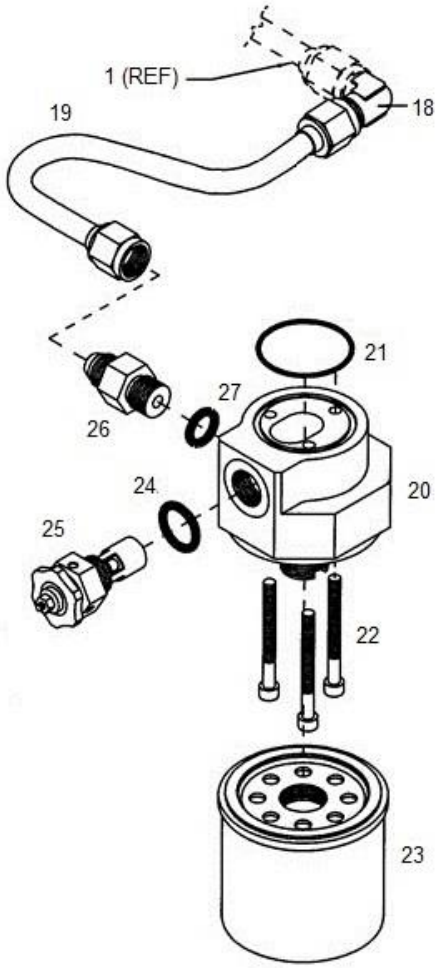

DETAIL B

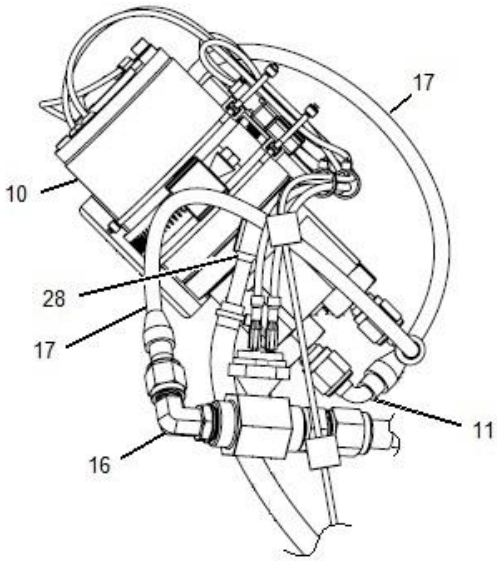

DETAIL D

(S/N 5246 AND SUBSEQUENT)

Sheet 2 of 2

FIGURE 7-9. MAIN ROTOR TRANSMISSION FILTRATION/COOLING SYSTEM

FIGURE 7-9. MAIN ROTOR TRANSMISSION FILTRATION/COOLING SYSTEM

ITEM NUMBER	PART NUMBER	DESCRIPTION	QTY PER ASSY	EFFECTIVITY		
				TH-28	480	480B
–◊	4130040-9	. Filtration/Cooling System (Used with 4130060-103, -105, & -109 Main Rotor Transmissions)	1			X
–*	4130040-7	. Filtration/Cooling System (Inactive) (Used with 4130060-103, -105, & -109 Main Rotor Transmissions)	1			X
–	4130040-5	. Filtration/Cooling System (Used with 4130060-101 Main Rotor Transmissions)	1			X
–	4130040-1	. Filtration/Cooling System (Used with 4130030-1 and 4130060-3 & -9 Main Rotor Transmissions)	1			X
1	ECD4069-1	. . Finned Cooling Tube Assembly	1			X
2	4130034-19	. . Mount Bracket Left Side (Used with 4130040-5, -7 & -9)	1			X
2	4130034-15	. . Mount Bracket Left Side (Used with 4130040-1)	1			X
2	4130034-17	. . Mount Bracket Right Side (Used with 4130040-5, -7 & -9)	1			X
2	4130034-11	. . Mount Bracket Right Side (Used with 4130040-1)	1			X
3	4130034-21	. . Mount Bracket Top (Used with 4130040-5, -7 & -9)	1			X
3	4130034-13	. . Mount Bracket Top (Used with 4130040-1)	1			X
4	NAS6603-6	. . Bolt	2			X
4	AN3-6A	. . Bolt (Superseded by NAS6603-6)	2			X
4	AN3-11A	. . Bolt (Superseded by AN3-6A)	6			X
4	NAS6603-8	. . Bolt	4			X
4	AN3-7A	. . Bolt (Superseded by NAS6603-8)	4			X
4	AN3-10A	. . Bolt (Superseded by AN3-7A)	1			X
5	NAS1149F0332P	. . Washer	6			X
5	NAS1149F0363P	. . Washer	6			X
5	AN960-10L	. . Washer (Superseded by NAS1149F0332P & NAS1149F0363P)	22			X
6	MS21083N3	. . Nut	6			X
6	AN364-1032A	. . Nut (Superseded by MS21083N3)	11			X
7	NAS6603-4	. . Bolt	3			X
7	AN3-5A	. . Bolt (Superseded by NAS6603-4)	3			X
8◊	4130038-11	. . Mount Bracket Assembly	1			X
8	4130033-1	. . Mount Bracket Assembly	1			X
–**	ECD111-11	. . . Clamp	1			X
–**	MS35842-13	. . . Clamp (Alternate)	1			X
–	MM-46-70	. . . Clamp (Superseded by MS35842-13)	1			X

FIGURE 7-9. MAIN ROTOR TRANSMISSION FILTRATION/COOLING SYSTEM

ITEM NUMBER	PART NUMBER	DESCRIPTION	QTY PER ASSY	EFFECTIVITY		
				TH-28	480	480B
–	MS20995C32	. . . . Safety Wire	A/R			X
9	AN525-10R10	. . Screw (Used with 4130038-11)	1			X
9	AN525-10R12	. . Screw (Upper)	1			X
9	AN525-10R14	. . Screw (Lower)	1			X
–▼	4230036-1	Oil Pump Kit	1			X
10◊	4130039-1	. . Pump, Oil (Used with 4130040-9)	1			X
10†	4192508-939	. . Pump, Oil (Used with 4130040-7)	1			X
–	8116-B	. . . Pump: Oil Transmission	1			X
–	1-480319-0	. . . Housing: Cap, 2p Pin Contact	1			X
–	60620-1	. . . Contact, Pin, 20-14 AWG	2			X
10‡	4130036-5	. . Pump & Motor Assembly Used with 4130040-1 & -5)	1			X
–	K10712	. . . Pump: Cooler, M.R.G.B. Oil	1			X
–	MS35265-15	. . . Screw, Mach (Flh), 4-40 X 0.38 dh	3			X
–	4130033-17	. . . Plug	1			X
11	4-8 F5OX-S	. . Fitting (Used with 4130040-9)	2			X
–	MS28778-8	. . . O-Ring	1			X
11	MS51525-6-4	. . Fitting, Straight (Used with 4192508-939)	2			X
–	MS28775-013	. . O-Ring (Used with 4192508-939)	2			X
11	MS20822-4J	. . Elbow (Used with 4130036-5)	2			X
–	4130035-13	. . Reducer	1			X
12	6-4 F5OX-S	. . Fitting	1			X
13	MS28778-4	. . O-Ring	2			X
14	4130035-11	. . Tee Fitting	1			X
15	77345-09.0HG-01	. . Pressure Switch	1			X
15	9253	. . Pressure Switch (Superseded by 77345-09.0HG-01)	1			X
16	MS51527B4S	. . Fitting (Used with 4130040-9)	1			X
16	MS51525B4S	. . Fitting	1			X
17	4130032-9	. . Line Assembly (Used with 4130040-9)	2			X
17	4130032-5	. . Line Assembly (Inactive) (Used with 4130040-7)	2			X
17	4130032-3	. . Line Assembly (Used with 4130040-1 & -5)	2			X
18	6EBTX-SS	. . Elbow	1			X
19	4130032-1	. . Line Assembly	1			X
20	4130031-1	. . Filter Housing Assembly	1			X
21	2-029	. . O-Ring	1			X
21	MS28775-029	. . O-Ring (Alternate)	1			X

FIGURE 7-9. MAIN ROTOR TRANSMISSION FILTRATION/COOLING SYSTEM

ITEM NUMBER	PART NUMBER	DESCRIPTION	QTY PER ASSY	EFFECTIVITY		
				TH-28	480	480B
22	NAS1351-3H32	. . Cap Screw	3			X
23	HP-1003	. . Filter	1			X
24	MS35769-11	. . Gasket	1			X
24	AN900-10	. . Gasket (Alternate)	1			X
25	K203RA	. . Chip Detector Assembly	1			X
–	M83248/1-011	. . . O-Ring	1			X
–	AN6227-6	. . . O-Ring (Superseded by M83248/1-011)	1			X
–	21FA-540	. . . Nut	1			X
26	DT-370-MOMF-5	. . Check Valve	1			X
27	MS28778-6	. . O-Ring	1			X
28	18050-42	. . Elbow (Used with 4130040-9)	1			X
28♦	MS20822-4D	. . Elbow	1			X
–▲	1/8 X 1/16 FG-S	. . Adapter	1			X
29♦	4130032-7	. . Drain Line Assembly	1			X

* Used on 480B, S/N 5114 and subsequent and 480 equipped with Increased Cooling Kit, P/N 4230031.

** Effectivity 480B S/N 5155 and subsequent. Retrofittable to 480B S/N 5042 and subsequent.

† For replacement, refer to SIL T-070.

‡ For replacement, refer to SIL T-063 Revision 1, or later revision.

◊ Effectivity 480B S/N 5246 and subsequent. Retrofittable to 480B S/N 5039 and subsequent via SIL T-063 Revision 1 or SIL T-070, as applicable (See Note symbols † and ‡).

♦ Used with 4130040-7 or installed per SIL T-063.

▲ Installed per SIL T-063 Revision 1 or SIL T-070.

▼ Eligibility 480B S/N 5114 through 5247.

FIGURE 8-3. MAIN ROTOR BLADE AND RETENTION ASSEMBLY

ITEM NUMBER	PART NUMBER	DESCRIPTION	QTY PER ASSY	EFFECTIVITY		
				TH-28	480	480B
20▼	1641-B	. . Fitting, Grease (1/4”-28 UNF-3B Thread) (Used with 28-14381-1)	2	X	X	X
20†	1650	. . Fitting, Grease (1/8” NPT Thread)	2	X	X	X
20	5045	. . Fitting, Grease (1/8” NPT Thread) (Superseded by 1650) (Obsolete)	2	X	X	X
21	28-14320-15	. . Lamiflex Bearing (Used with 28-14234-909)	1	X	X	
22	28-14293-7	. . Shim, .002” (Used with 28-14234-909)	A/R	X	X	
22	28-14293-9	. . Shim, .004” (Used with 28-14234-909)	A/R	X	X	
22	28-14293-11	. . Shim, .0075” (Used with 28-14234-909)	A/R	X	X	
22	28-14293-13	. . Shim, .010” (Used with 28-14234-909)	A/R	X	X	
23	28-14335-1	. . Nut (Used with 28-14234-909)	1	X	X	
24	AN380-4-8	. . Cotter Pin (Used with 28-14234-909)	1	X	X	
25	ECD084-1	. . Tension/Torsion Strap (Used with 28-14381-1& -3)	1	X	X	X
25▲	AA-ECD-084-480	. . TT Strap Assembly	1	X	X	X
26	28-14381-902	. . Cylinder Assembly (Used with 28-14381-1& -3)	1	X	X	X
–	28-14383-13	. . . Cylinder	1	X	X	X
–	28-14389-13	. . . Cover	1	X	X	X
27	28-14382-21	. . Pin (Used with 28-14381-1 & -3)	2	X	X	X
28	28-14381-901	. . Lug Assembly (Used with 28-14381-1 & -3)	1	X	X	X
–	28-14389-11	. . . Cover	1	X	X	X
–	28-14384-13	. . . Lug – TT Strap Retention	1	X	X	X
29	NAS6603-14	. . Bolt (Used with 28-14381-1 & -3)	2	X	X	X
29	AN3-12A	. . Bolt (Used with 28-14381-1 & -3) (Superseded by NAS6603-14)	2	X	X	X
30	NAS1149F0363P	. . Washer (Used with 28-14381-1 & -3)	2	X	X	X
30	AN960-10	. . Washer (Used with 28-14381-1 & -3) (Alternate)	2	X	X	X
31	NAS1149F0332P	. . Washer (Used with 28-14381-1 & -3)	2	X	X	X
31	AN960-10L	. . Washer (Used with 28-14381-1 & -3) (Alternate)	2	X	X	X
32	28-14382-19	. . Pin (Used with 28-14381-1 & -3)	1	X	X	X
33	VH-75	. . Retaining Ring (Used with 28-14381-1 & -3)	2	X	X	X
34	28-14239-1	. . Cover Assembly	1	X	X	X
–	X-142	. . . Channel	A/R	X	X	X
34	28-14239-5	. . Cover Assembly (Obsolete)	1	X	X	X
–	X-142	. . . Channel	A/R	X	X	X

FIGURE 8-3. MAIN ROTOR BLADE AND RETENTION ASSEMBLY

ITEM NUMBER	PART NUMBER	DESCRIPTION	QTY PER ASSY	EFFECTIVITY		
				TH-28	480	480B
35 ≡	NK-500-8R6	. . Screw	5	X	X	X
36	NAS1149DN832H	. . Washer	5	X	X	X
36	AN960D8	. . Washer (Alternate)	5	X	X	X
37	28-14100-9	. Main Rotor Blade	3	X	X	X
–	28-14119-11	. . Trim Tab	2	X	X	X
–	MS20470AD3-4	. . Rivet	10	X	X	X
38	28-14007-3	. Retention Pin	3	X	X	X
39	NAS1149C1290R	. Washer	3	X	X	X
39	AN960C1216	. Washer (Alternate)	3	X	X	X
40	MS21083N12	. Nut	3	X	X	X
40	AN364-1216A	. Nut (Superseded by MS21083N12)	3	X	X	X
41	28-14283-1	. Drag Link	3	X	X	X
42	AN176-15A	. Bolt	3	X	X	X
43	AN176-17A	. Bolt	3	X	X	X
44	NAS1149D0663H	. Washer	18	X	X	X
44	AN960D616	. Washer (Alternate)	18	X	X	X
45	MS21083N6	. Nut	6	X	X	X
45	AN364-624A	. Nut (Superseded by MS21083N6)	6	X	X	X
46	28-14278-1	. Pitch Arm	3	X	X	X
47	4143010-5	. Planipetal Weight (Used with 28-14234-909)	3	X	X	
48	MS20074-05-23	. Bolt (Used with 28-14234-909)	3	X	X	
49	MS24677-52	. Bolt (Used with 28-14234-909)	3	X	X	
50	MS20074-05-17	. Bolt (Used with 28-14234-909)	3	X	X	
51	MS20074-05-16	. Bolt (Used with 28-14234-909)	3	X	X	
52	NAS1149D0563H	. Washer	12	X	X	X
52	AN960D516	. Washer (Alternate)	12	X	X	X
53	AN75-A6	. Bolt (Used with 28-14381-1 & -3)	6	X	X	X
53	MS20074-05-06	. Bolt (Alternate)	6	X	X	X
53	MS24677-49	. Bolt (Alternate)	6	X	X	X
54	AN75-A12	. Bolt (Used with 28-14381-1 & -3)	6	X	X	X
54	MS20074-05-12	. Bolt (Alternate)	6	X	X	X
54*	MS24677-52	. Bolt (Alternate)	6	X	X	X
55	AN176-15A	. Bolt (Used with 28-14234-909)	3	X	X	
56	3/8 Harper	. Washer, Flat (Used with 28-14234-909)	A/R	X	X	
57	MS21044N6	. Nut (Used with 28-14234-909)	3	X	X	

FIGURE 8-3. MAIN ROTOR BLADE AND RETENTION ASSEMBLY

ITEM NUMBER	PART NUMBER	DESCRIPTION	QTY PER ASSY	EFFECTIVITY		
				TH-28	480	480B
57	AN365-624A	. Nut (Used with 28-14234-909)	3	X	X	
58	28-14141-913	. Leading Edge Tape/Adhesive Kit	A/R	X	X	X
58	28-14141-13-Kit	. Blade Tape Kit (Superseded by 28-14141-913)	A/R	X	X	X
59	28-14109-1	. Plug Balance Blade Rotor Main (Per Blade)	2	X	X	X
–	MS21083N3	. . Nut: Hex	2	X	X	X
–	AN960-10	. . Washer	A/R	X	X	X
–	28-14110-1	. . Washer Balance	A/R	X	X	X
–	28-14110-2	. . Washer Balance	A/R	X	X	X
–	28-14110-3	. . Washer Balance	A/R	X	X	X
–	MS24693-S287	. . Screw, Machine	2	X	X	X
–	MS246935287FLTH	. . Screw (Superseded by MS24693-S287)	2	X	X	X
–	ACF-50	. . Lubricant: Anti Corrosive	A/R	X	X	X

* Use only one (1) washer per bolt.

≡ See Appendix A for equivalent part information.

▼ Effectivity 480 S/N 5034 and prior.

† Effectivity 480B S/N 5168 and subsequent. Retrofittable to 480 S/N 5035 – 5041 and 480B S/N 5042 and subsequent.

** Effectivity 480B S/N 5207 and subsequent. Retrofittable to 480 S/N 5001 – 5041 and 480B S/N 5042 and subsequent. 28-14385-13 is an acceptable alternate to the -15 part.

▲ Supplied by Airwolf Aerospace, LLC. as part of STC SR03465CH.

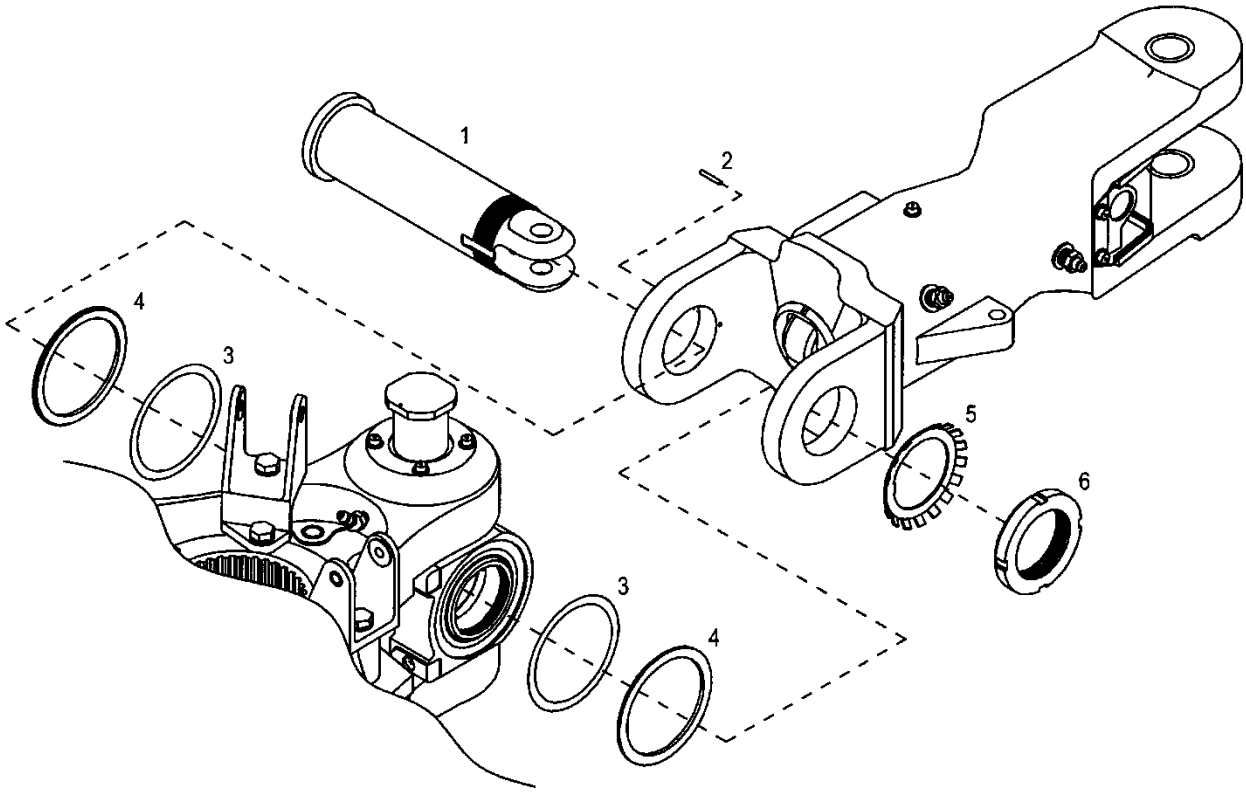

FIGURE 8-4. RETENTION ASSEMBLY/FLAPPING PIN INSTALLATION

FIGURE 8-5. HYDRAULIC DAMPER ASSEMBLY

ITEM NUMBER	PART NUMBER	DESCRIPTION	QTY PER ASSY	EFFECTIVITY		
				TH-28	480	480B
–*	28-14375-107	. Damper Assembly	3	X	X	
–**	28-14375-103	. Damper Assembly	3		X	X
–	28-14375-906	. . Damper Housing Assembly (Used with 28-14375-107)	1	X	X	
–	28-14375-908	. . Damper Housing Assembly (Used with 28-14375-103)	1		X	X
1	28-14357-3	. . . Damper Housing (Used with 28-14375-107)	1	X	X	
1	28-14357-5	. . . Damper Housing (Used with 28-14375-103)	1		X	X
2	28-14276-1	. . . Flanged Bushing (Used with 28-14375-107)	2	X	X	
2	28-14359-15	. . . Flanged Bushing (Used with 28-14375-103)	2		X	X
3	28-14277-1	. . . Damper Bushing (Used with 28-14375-107)	1	X	X	
3	28-14359-17	. . . Spacer (Used with 28-14375-103)	1		X	X
4	2-025 E515-80	. . . O-Ring (E515-80 Material)	1	X	X	X
4	NAS1611-025	. . . O-Ring (Alternate)	1	X	X	X
5	28-14358-4	. . . Sleeve Assembly (See Item 12 for breakdown)	1	X	X	X
6	28-14370-17	. . Piston	1	X	X	X
7	82043-22420	. . Threaded Orifice	1	X	X	X
8	51086	. . Set Screw	1	X	X	X
8	28-14390-11	. . Set Screw (Alternate)	1	X	X	X
9	PGZF0A0180	. . Glyd Ring Set	1		X	X
–	28-14375-907	. . Damper Cover Assembly	1	X	X	X
10	28-14265-3	. . . Damper End Cap	1	X	X	X
11	2-025 E515-80	. . . O-Ring (E515-80 Material)	1	X	X	X
11	NAS1611-025	. . . O-Ring (Alternate)	1	X	X	X
12	28-14358-4	. . . Sleeve Assembly	1	X	X	X
–	28-14356-5	. . . . Sleeve	1	X	X	X
13	959-5	. . . . Wiper Ring	1	X	X	X
14	12500750-125B	. . . . Seal	1	X	X	X
15	2-137	. . O-Ring (E515-80 Material)	1	X	X	X
15	NAS1611-137	. . O-Ring (Alternate)	1	X	X	X
16	NAS1149F0463P	. . Washer	6	X	X	X
16	AN960-416	. . Washer (Superseded by NAS1149F0463P)	6	X	X	X
17	NAS6604H9	. . Bolt	4	X	X	X

FIGURE 8-5. HYDRAULIC DAMPER ASSEMBLY

ITEM NUMBER	PART NUMBER	DESCRIPTION	QTY PER ASSY	EFFECTIVITY		
				TH-28	480	480B
17	AN4H10A	. . Bolt (Superseded by NAS6604H9)	4	X	X	X
18	NAS559-3	. . Lock, Type A	1	X	X	X
19	NAS509-8	. . Nut	1	X	X	X
20	ECD091-1	. . Rod End Bearing	1	X	X	X
21	28-14366-1	. . Reservoir	1	X	X	X
22	28-14367-7	. . Valve Assembly	2	X	X	X
23	28-14368-2	. . Plug	2	X	X	X
24	NAS1612-10	. . O-Ring (Preferred)	2	X	X	X
24	3-910 E515-80	. . O-Ring (Alternate)	2	X	X	X
25≡	NAS1612-2	. . O-Ring (Preferred)	4	X	X	X
25 ≡	NAS1612-2A	. . O-Ring (Alternate)	4	X	X	X
25	3-902 E515-80	. . O-Ring (Alternate)	4	X	X	X
26	AN814-2DL	. . Plug	2	X	X	X
27	28-14369-1	. . Sleeve	2	X	X	X
28	NAS6604H19	. . Bolt	2	X	X	X
28	AN4H15A	. . Bolt (Superseded by NAS6604H19)	2	X	X	X
29†	28-14374-15	. . Placard	1	X	X	X
29	28-14374-13	. . Placard (Superseded by 28-14374-15)	1	X	X	X
30	28-13145-1	. . Placard	1	X	X	X

* Used with Center Hub Assembly, P/N 28-14219-3; 480 S/N 5001 through 5041 only.

** Used with Center Hub Assembly, P/N 28-14219-5 and -7.

≡ See Appendix A for equivalent part information.

† Effectivity 480B S/N 5114 and subsequent. Retrofittable to 480 S/N 5001 to 5041 and 480B S/N 5042 and subsequent.

FIGURE 9-1. CYCLIC STICK AND TORQUE TUBE INSTALLATION

ITEM NUMBER	PART NUMBER	DESCRIPTION	QTY PER ASSY	EFFECTIVITY		
				TH-28	480	480B
12	MS27641-6	. . . Bearing	2	X	X	X
13	VH-87-S02	. . . Retaining Ring	2	X	X	X
1†	4166009-3	. Cyclic Torque Tube Assembly	1	X	X	
–	4166010-1	. . Bearing Retainer Assembly	2	X	X	
2	4166015-11	. . . Retainer	1	X	X	
3	MB542DD	. . . Bearing	1	X	X	
4	VH-175-S02	. . . Retaining Ring	1	X	X	
5	4166015-13	. . . Sleeve	1	X	X	
6	4166015-19	. . . Shim	A/R	X	X	
7	CR3523-6-05	. . Rivet	8	X	X	
10	4166014-1	. . Fitting Assembly	2	X	X	
11	4166053-15	. . . Shim, .005"	A/R	X	X	
12	MS27641-6	. . . Bearing	2	X	X	
13	VH-87-S02	. . . Retaining Ring	2	X	X	
14	4166051-15	. Shim, .015"	A/R	X	X	X
14	4166051-20	. Shim, .020"	A/R	X	X	X
14	4166051-25	. Shim, .025"	A/R	X	X	X
14	4166051-30	. Shim, .030"	A/R	X	X	X
15	4118824-17	. Bracket (Required with 4166009-7)	1	X	X	X
15	4118824-11	. Bracket (Alternate)	1	X	X	X
16	4118824-18	. Bracket (Required with 4166009-7)	1	X	X	X
16	4118824-12	. Bracket (Alternate)	1	X	X	X
17	4118805-11	. Bracket (Obsolete)	1	X		
18	4118805-12	. Bracket (Obsolete)	1	X		
19	4118805-13	. Gusset	3		X	X
20	NAS6203-2	. Bolt	30	X	X	X
21	NAS1149D0363H	. Washer	30	X	X	X
21	AN960D10	. Washer (Alternate)	30	X	X	X
22	MS21042-3	. Nut	30	X	X	X
23	4199008-8	. Cyclic Stick Assembly, Long	1		X	
23	4199045-103	. Cyclic Stick Assembly, Pilot Short	1		X	
23‡●	4199045-109	. Cyclic Stick Assembly, Pilot Short	1		X	X
23	4199045-131	. Cyclic Stick Assembly, Pilot Long	1		X	X
24	4199008-7	. Cyclic Stick Assembly, Pilot/Copilot	2	X		
25	4199045-105	. Cyclic Stick Assembly, Copilot Short	1		X	
25‡●	4199045-111	. Cyclic Stick Assembly, Copilot Short	1		X	X
25	4199045-133	. Cyclic Stick Assembly, Copilot Long	1		X	X

FIGURE 9-1. CYCLIC STICK AND TORQUE TUBE INSTALLATION

ITEM NUMBER	PART NUMBER	DESCRIPTION	QTY PER ASSY	EFFECTIVITY		
				TH-28	480	480B
26	4166022-905	. . Copilot Cyclic Stick Socket Assembly	1		X	X
27	A-A-55488-1	. . Safety Pin	1		X	X
27	AN416-1	. . Safety Pin	1		X	X
27	502	. . Safety Pin (Alternate)	1		X	X
28	L47N-600-3	. . Lanyard	1		X	X
28	52305-A06-6	. . Lanyard (Replaced by L47N-600-3)	1		X	X
29	CR3213-5-03	. . Rivet	1		X	X
30	NAS6206-24D	. Bolt	2	X	X	X
30	NAS6206-23D	. Bolt (Superseded by NAS6206-24D)	2	X	X	X
31	28-16524-3	. Shim, .020"	A/R	X	X	X
31	28-16524-4	. Shim, .015"	A/R	X	X	X
31	28-16524-5	. Shim, .005"	A/R	X	X	X
31	28-16524-6	. Shim, .003"	A/R	X	X	X
31	28-16524-7	. Shim, .002"	A/R	X	X	X
31	28-16524-8	. Shim, .001"	A/R	X	X	X
32	NAS1149D0663H	. Washer	2	X	X	X
32	AN960D616	. Washer (Alternate)	2	X	X	X
33	NAS1149D0616H	. Washer	4	X	X	X
33	AN960D616L	. Washer (Alternate)	4	X	X	X
34	MS17826-6	. Nut	2	X	X	X
35	MS24665-300	. Cotter Pin	2	X	X	X
35	AN381-3-12	. Cotter Pin (Superseded by MS24665-300)	2	X	X	X
36▼	G2-0032	. Otto Grip (Used with 4199008 and 4199045 Cyclic Sticks)	1	X	X	X
–	P1-112	. . Snap Action Switch	3	X	X	X
–	T4-0198	. . Trim Control	1	X	X	X
–	U2-025	. . Cyclic Grip Trigger	1	X	X	X
37 ≡	4167521-21	. Boot: Cyclic Turbine	2	X	X	X
37 ≡	ZFD-1094-0-7-32	. Boot: Cyclic Turbine (Superseded by 4167521-21)	2	X	X	X
38	4167511-5	. Stop Ring Assembly	2	X	X	X
39	AN526-832R8	. Screw	4	X	X	X
40	4167521-19	. Cover Boot, Cyclic Stub	2	X	X	X

◦ Production effectivity - 480/480B, S/N 5059 and subsequent.

◦◦ Production effectivity - 480/480B, S/N 5053 thru 5058.

* Production effectivity - 480B, S/N 5045 thru 5052. Replacement assembly for all prior serial number aircraft. Requires Bracket, P/N 4118824-17 & 4118824-18.

** Production effectivity - 480/480B, S/N 5012 thru 5044.

† Production effectivity - TH-28, S/N 3004 thru 3006; 480, S/N 5001 thru 5011.

‡ 480: Requires installation of Bellcrank Assembly, P/N 4106624-1 or -5 and 4166024-3 or -7 (Cyclic Vibration Absorbers).

● 4199045-109 (pilot) and 4199045-111 (copilot) short stick assemblies are acceptable alternates for the 4199008-7 cyclic control installation.

≡ See Appendix A for equivalent part information.

▼ Cyclic grip is shimmed A/R when necessary to prevent movement on the cyclic stick with P/N 300-012-XXX Precision Brand stainless steel.

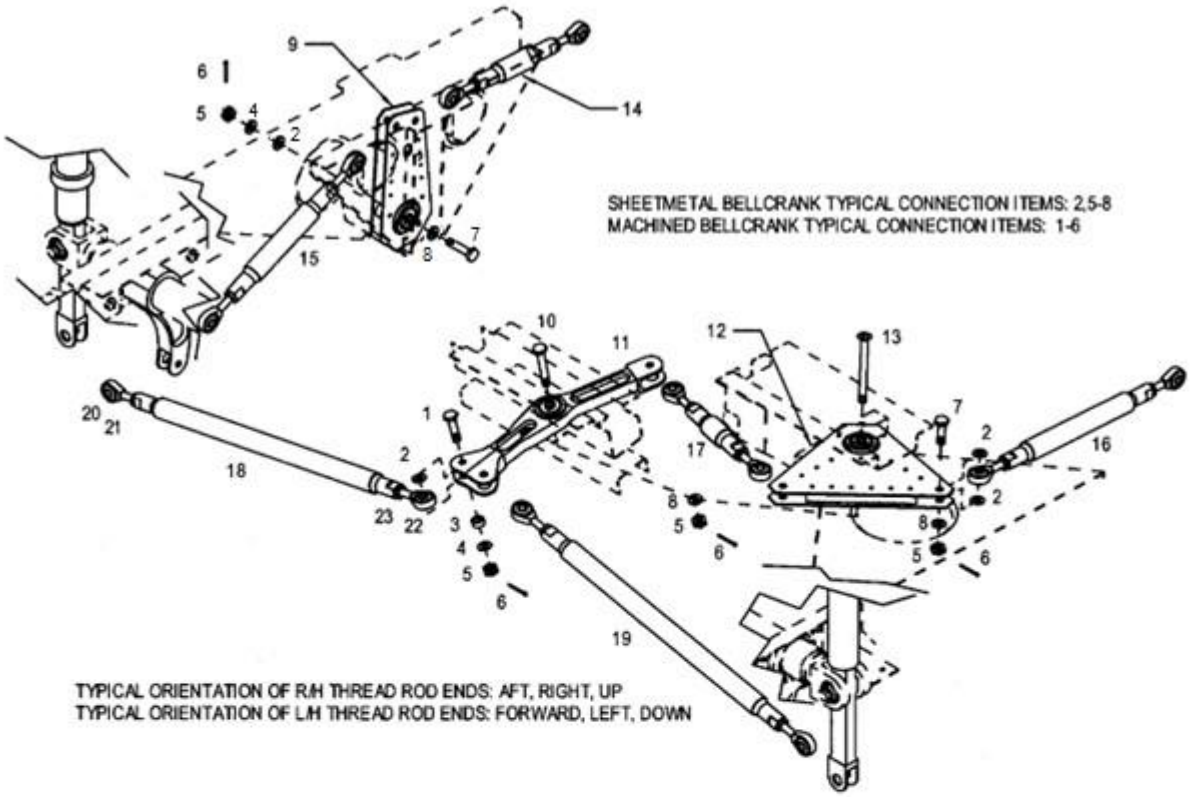

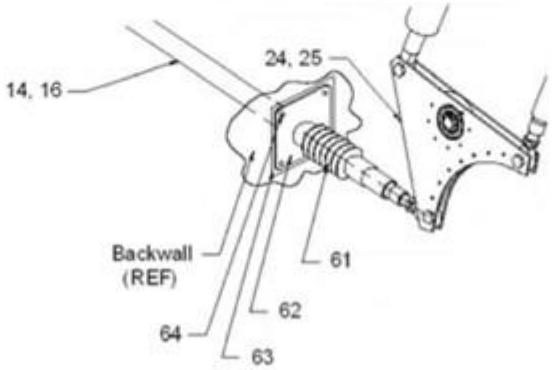

Detail C

Sheet 1 of 3

FIGURE 9-2. CYCLIC CONTROL TUBE AND BELLCRANK INSTALLATION

FIGURE 9-2. CYCLIC CONTROL TUBE AND BELLCRANK INSTALLATION

ITEM NUMBER	PART NUMBER	DESCRIPTION	QTY PER ASSY	EFFECTIVITY		
				TH-28	480	480B
1	NAS6204-11D	. Bolt	9	X	X	X
2	NAS1149F0432P	. Washer	10	X	X	X
2	AN960-416L	. Washer (Alternate)	10	X	X	X
3	NAS73-4E003	. Bushing	6	X	X	X
4	NAS1149D0416H	. Washer	46	X	X	X
4	AN960D416L	. Washer (Alternate)	46	X	X	X
5	MS17826-4	. Nut	29	X	X	X
–	MS20995C25	. Safety Wire	10 in.	X	X	X
6	MS24665-153	. Cotter Pin	27	X	X	X
7	NAS1104-9D	. Bolt	10	X	X	X
8	NAS1149D0463H	. Washer	11	X	X	X
8	AN960D416	. Washer (Alternate)	11	X	X	X
9	4166008-21	. Bellcrank	1	X	X	X
10	NAS6204-21D	. Bolt	2	X	X	X
11	4166011-1	. Bellcrank Assembly	1	X	X	X
12	4166008-23	. Bellcrank	1	X	X	X
13	NAS1204-40D	. Bolt	1	X	X	X
14	4166050-7	. Control Tube Assembly	1	X	X	X
14	4166050-907	. Control Tube Assembly (Without Rod Ends)	1	X	X	X
15	4166050-5	. Control Tube Assembly	1	X	X	X
16	4166050-103	. Control Tube Assembly	1	X	X	X
16	4166050-903	. Control Tube Assembly (Without Rod Ends)	1	X	X	X
17	4166050-101	. Control Tube Assembly	1	X	X	X
18	4166050-107	. Control Tube Assembly	1	X	X	X
19	4166050-109	. Control Tube Assembly	1	X	X	X
20*	HMVV4M	. . Bearing Rod End	1	X	X	X
21*	AN316-4R	. . Nut	1	X	X	X
22*	HMLVV4M	. . Bearing Rod End	1	X	X	X
23*	AN316-4L	. . Nut	1	X	X	X
24	4166008-29	. Bellcrank	1	X	X	X
25	4166008-25	. Bellcrank	1	X	X	X
26	4166050-105	. Control Tube Assembly	1	X	X	X
27	4166050-9	. Control Tube Assembly	1	X	X	X
28	4166008-27	. Bellcrank (Inactive)	1	X	X	
29	4166008-19	. Bellcrank (Inactive)	1	X	X	
30	NAS6204-16D	. Bolt	4	X	X	X
31	NAS6204-26D	. Bolt	3	X	X	X

FIGURE 9-2. CYCLIC CONTROL TUBE AND BELLCRANK INSTALLATION

ITEM NUMBER	PART NUMBER	DESCRIPTION	QTY PER ASSY	EFFECTIVITY		
				TH-28	480	480B
32	4166050-213	. Control Tube Assembly	1	X	X	X
32	4166050-1	. Control Tube Assembly (Superseded by 4166050-213)	1	X	X	X
–	28-16156-1	. . Bearing	2	X	X	X
33	4166050-211	. Control Tube Assembly	1	X	X	X
34	4166031-101	. Cyclic Trim Assembly, Lateral (See Figure 9-3 for breakdown)	1	X	X	X
35	4166031-102	. Cyclic Trim Assembly, Longitudinal (See Figure 9-3 for breakdown)	1	X	X	X
36	28-16625-1	. Bushing	2	X	X	X
37	28-16203-1	. Spacer	2	X	X	X
38	NAS6204-14D	. Bolt	2	X	X	X
39**	4166024-7	. Bellcrank Assembly	1	X	X	X
–	4166024-13	. . Bellcrank	1	X	X	X
40●●	4166024-103	. . Beam Assembly	1	X	X	X
–	4166024-23	. . . Beam	REF	X	X	X
–	5453	. . . Teflon Tape	REF	X	X	X
–	4166024-37	. . . Label	REF	X	X	X
41	4166024-19	. . Stiffener	1	X	X	X
42	NAS6203-6	. . Bolt	4	X	X	X
43	NAS1149F0332P	. . Washer	5	X	X	X
43	AN960-10L	. . Washer (Alternate)	5	X	X	X
44	MS21042-3	. . Nut	4	X	X	X
45	30345T178	. . Lanyard	1	X	X	X
45	30345T177	. . Lanyard (Alternate)	1	X	X	X
45	4166024-101	. . Lanyard Assembly (Obsolete)	1	X	X	X
46	MS21919WCJ8	. . Clamp	1	X	X	X
46	MS21919WF8	. . Clamp (Superseded by MS21919WCJ8)	1	X	X	X
47	NAS6603-1	. . Bolt	1	X	X	X
47	AN3-3A	. . Bolt (Superseded by NAS6603-1)	1	X	X	X
48	MS21044N3	. . Nut	1	X	X	X
48	AN365-1032A	. . Nut (Superseded by MS21044N3)	1	X	X	X
49**	4166024-5	. Bellcrank Assembly	1	X	X	X
–	4166024-11	. . Bellcrank	1	X	X	X
50●●	4166024-103	. . Beam Assembly	1	X	X	X
–	4166024-23	. . . Beam	REF	X	X	X
–	5453	. . . Teflon Tape	REF	X	X	X
–	4166024-37	. . . Label	REF	X	X	X

FIGURE 9-2. CYCLIC CONTROL TUBE AND BELLCRANK INSTALLATION

ITEM NUMBER	PART NUMBER	DESCRIPTION	QTY PER ASSY	EFFECTIVITY		
				TH-28	480	480B
51	4166024-19	. . Stiffener	1	X	X	X
52	NAS6203-6	. . Bolt	4	X	X	X
53	NAS1149F0332P	. . Washer	5	X	X	X
53	AN960-10L	. . Washer (Alternate)	5	X	X	X
54	MS21042-3	. . Nut	4	X	X	X
55	30345T178	. . Lanyard	1	X	X	X
55	30345T177	. . Lanyard (Alternate)	1	X	X	X
55	4166024-101	. . Lanyard Assembly (Obsolete)	1	X	X	X
56	MS21919WCJ8	. . Clamp	1	X	X	X
56	MS21919WF8	. . Clamp (Superseded by MS21919WCJ8)	1	X	X	X
57	NAS6603-1	. . Bolt	1	X	X	X
57	AN3-3A	. . Bolt (Superseded by NAS6603-1)	1	X	X	X
58	MS21044N3	. . Nut	1	X	X	X
58	AN365-1032A	. . Nut (Superseded by MS21044N3)	1	X	X	X
59†	NAS6204-11D	. Bolt	2	X	X	X
60†	NAS75-4-006	. Bushing	2	X	X	X
61	LDF-5-157	. Boot	2		X	X
–	PLT2S	. Tie Wrap	4		X	X
62	4166052-11	. Boot Adapter	2		X	X
63	4119519-27	. Patch, Backwall, Fire Curtain	2		X	X
64	6RX3/8	. Screw	8		X	X

* Used on all control tube assemblies.

** Standard equipment on 480B.

† Used only with 4166024-5 and -7 bellcrank assemblies.

●● This assembly includes life limited detail part number 4166024-23. See Table 3-1 of the TH-28/480 Series Maintenance Manual.

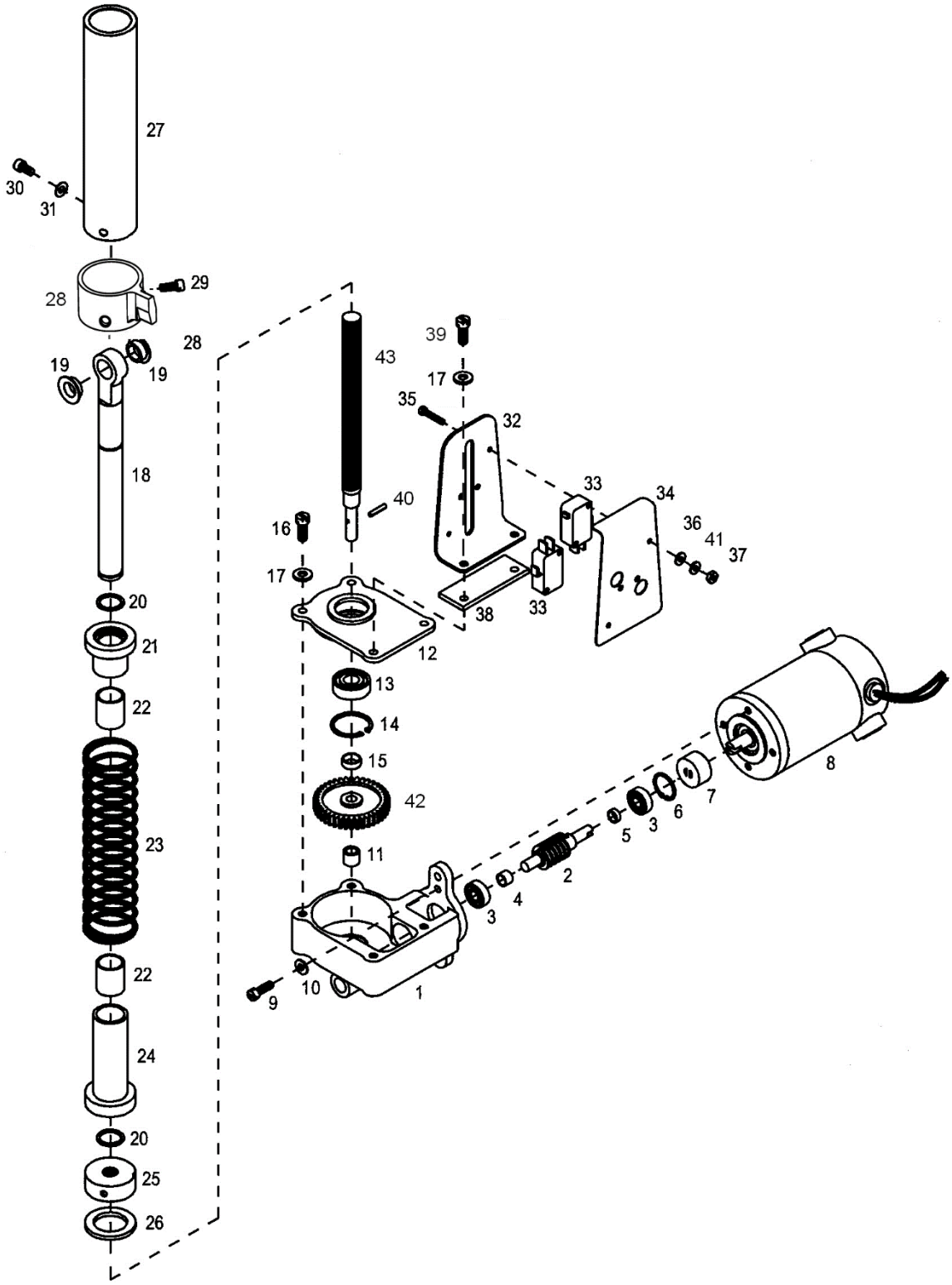

FIGURE 9-3. CYCLIC TRIM ASSEMBLY

FIGURE 9-4. COLLECTIVE STICK AND TORQUE TUBE INSTALLATION

ITEM NUMBER	PART NUMBER	DESCRIPTION	QTY PER ASSY	EFFECTIVITY		
				TH-28	480	480B
–	4167227-7	. Collective Torque Tube Assembly	1	X	X	X
1	4167225-11	. . Torque Tube	1	X	X	X
2	4167213-19	. . Stick Fitting	1	X	X	X
3	10-DU-10	. . . Bearing	1	X	X	X
4	4167213-21	. . Stick Fitting	1	X	X	X
5	10-DU-10	. . . Bearing	1	X	X	X
6	NAS6203-6	. . Bolt	8	X	X	X
7	NAS1149D0316H	. . Washer	8	X	X	X
7	AN960D10L	. . Washer (Alternate)	8	X	X	X
8	4167242-11	. . Shim	8	X	X	X
9	MS21042-3	. . Nut	8	X	X	X
10	4167230-1	. . Bearing Retainer Assembly	2	X	X	X
11	4167229-11	. . . Bearing Block	1	X	X	X
12	MS21428-44	. . . Bearing	1	X	X	X
13	VH-225-S02	. . . Retainer Ring	1	X	X	X
14	4167211-15	. . . Sleeve	1	X	X	X
–	680	. . . Loctite Retaining Compound	A/R	X	X	X
15	CR3213-4-02	. . Rivet	14	X	X	X
16	4164017-3	. . Bracket	1	X	X	X
17	CR3213-5-02	. . Rivet	4	X	X	X
18	4167232-13	. Bearing Support	1	X	X	X
19	4167233-13	. Bearing Support	1	X	X	X
21●	NAS1149D0316H	. Washer	8			X
21●	AN960D10L	. Washer (Alternate)	8			X
21●	AN960KD10L	. Washer (Superseded by AN960D10L)	12	X	X	X
22	MS21042-3	. Nut	4	X	X	X
23°	4199046-3	. Collective Stick Assembly/Installation - Pilot	1	X	X	X
23°	4199046-R	. Collective Stick Assembly/Installation - Pilot	1	X	X	X
23**	4199080-903	. Collective Stick Assembly - Pilot	1			X
24	4199011-3	. Collective Stick Assembly/Installation - Copilot	1	X		
25**	4199080-901	. Collective Stick Assembly/Installation - Copilot	1			X
25	4199046-1	. Collective Stick Assembly/Installation - Copilot	1	X	X	X
26*	4167324-15	. Bolt	1	X	X	X
27	ABC6114	. Expando Pin	1		X	X
28	4167231-13	. Insert	1		X	X
29	4164006-11	. Sleeve	1		X	X
30●	NAS6603-12	. Bolt	4			X
30●	AN3-11A	. Bolt (Superseded by NAS6603-12)	4			X

FIGURE 9-4. COLLECTIVE STICK AND TORQUE TUBE INSTALLATION

ITEM NUMBER	PART NUMBER	DESCRIPTION	QTY PER ASSY	EFFECTIVITY		
				TH-28	480	480B
31●	NAS1149F0332P	. Washer	4			X
31●	AN960-10L	. Washer (Alternate)	4			X
32●	NAS66032	. Bolt	4			X
32●	AN3-4A	. Bolt (Superseded by NAS66032)	4			X
33†	4199072-11	. Actuator Contactor Positioner	1			X
–	CR3213-5-04	. . Rivet	2			X
–	MS16998-10L	. . Cap Screw	3			X
–	NAS620-6L	. . Washer	3			X
34†	4199072-13	. Actuator Contactor	3			X

* TH-28 quantity: 2 each.

** 480B S/N 5136 and subsequent.

● Effectivity 480B S/N 5144 and subsequent.

† Effectivity 480B S/N 5176 and subsequent. Retrofittable to 480B S/N 5042 and subsequent.

° For replacement of P/N 4199046-3, contact Enstrom Customer Service to obtain replacement P/N 4199046-R through Enstrom's parts exchange program.

FIGURE 9-12. UPPER SWASHPLATE ASSEMBLY AND CONTROLS

ITEM NUMBER	PART NUMBER	DESCRIPTION	QTY PER ASSY	EFFECTIVITY		
				TH-28	480	480B
–	4140500-101	. Guide Tube Assembly	1	X	X	X
–	4140500-909	. Upper Swashplate Assembly (Superseded by 4140500-101)	1	X	X	X
1	28-16260-1	. . Retainer & Guide Shaft Assembly	1	X	X	X
2	28-16264-1	. . . Bushing	3	X	X	X
3	4140530-1	. . Main Rotor Control System	1	X	X	X
4	16DU16	. . . Bushing	6	X	X	X
–	4140500-9	. . Bearing Housing Assembly	1	X	X	X
–	4140500-911	. . Bearing Housing Assembly (Superseded by 4140500-9)	1	X	X	X
5	28-16106-2	. . . Spacer	1	X	X	X
6	28-16386-1	. . . Slinger	1	X	X	X
7	28-16108-2	. . . Bearing Housing	1	X	X	X
7*	28-16108-11	. . . Bearing Housing (Used with 4140500-9)	1	X	X	X
8	ECD013-11	. . . Bearing	1	X	X	X
9	28-16125-3	. . . Shim, .005”	A/R	X	X	X
9	28-16125-4	. . . Shim, .003”	A/R	X	X	X
9	28-16125-5	. . . Shim, .002”	A/R	X	X	X
10*	28-16043-19	. . . Bearing Retainer	1	X	X	X
10°°	28-16043-11	. . . Bearing Retainer	1		X	
11	AN503-10-10	. . . Screw	6	X	X	X
12	1637-B	. . . Fitting, Grease	1	X	X	X
13*	28-16112-17	. . Housing	1	X	X	X
13*	28-16112-15	. . Housing (Superseded by 28-16112-17 and used with 28-16043-19)	1	X	X	X
13	28-16112-13	. . Housing (Superseded by 28-16112-17 and used with 28-16043-11)	1	X	X	
14	28-16126-1	. . Lock Plate	1	X	X	X
15	28-16113-1	. . Nut	3	X	X	X
16	NAS1149F0432P	. Washer	3	X	X	X
16	AN960-416L	. Washer (Alternate)	3	X	X	X
17	NAS6604H1	. Bolt	3	X	X	X
17	AN4H-4A	. Bolt (Superseded by NAS6604H1)	3	X	X	X
–	MS20995C25	. Safety Wire	A/R	X	X	X
18	4167316-5	. Collective Walking Beam Assembly	1	X	X	X
18**	4167316-3	. Collective Walking Beam Assembly	1	X	X	
–	LHSSE-5	. . Bearing	2	X	X	X
–	4167333-13	. . Bushing	2	X	X	X

FIGURE 9-12. UPPER SWASHPLATE ASSEMBLY AND CONTROLS

ITEM NUMBER	PART NUMBER	DESCRIPTION	QTY PER ASSY	EFFECTIVITY		
				TH-28	480	480B
19	28-16109-1	. Bolt	2	X	X	X
19˚	28-16109-11	. Bolt	2	X	X	X
–	28-16109-13	. Bushing (Used with 28-16108-11)	2	X	X	X
20	NAS6206-32D	. Bolt	2	X	X	X
21	NAS1149F0632P	. Washer	4	X	X	X
21	AN960-616L	. Washer (Alternate)	4	X	X	X
22	4167317-13	. Link	2	X	X	X
23	ECD050-15	. Washer, Flat	4	X	X	X
23	3/8 Harper	. Washer, Flat (Alternate)	4	X	X	X
24	28-16524-3	. Shim, .020"	A/R	X	X	X
24	28-16524-4	. Shim, .015"	A/R	X	X	X
24	28-16524-5	. Shim, .005"	A/R	X	X	X
24	28-16524-6	. Shim, .003"	A/R	X	X	X
24	28-16524-7	. Shim, .002"	A/R	X	X	X
24	28-16524-8	. Shim, .001"	A/R	X	X	X
25	4167318-11	. Spacer	2	X	X	X
26	NAS1149F0663P	. Washer	2	X	X	X
26	AN960-616	. Washer (Alternate)	2	X	X	X
27	AN320-6	. Nut	2	X	X	X
28	MS24665-300	. Cotter Pin	2	X	X	X
28	AN381-3-12	. Cotter Pin (Superseded by MS24665-300)	2	X	X	X
29	4140532-5	. Control Rod Assembly	3	X	X	X
29‡	4140532-3	. Control Rod Assembly (Alternate)	3	X	X	X
29‡	4140532-1	. Control Rod Assembly (Alternate)	3	X	X	X
30	M81934/1-08C012	. . Bearing	3		X	X
30 ≡	MS21240-08C12	. . Bearing (Superseded by M81934/1-08C012)	3	X	X	X
31●	28-16253-8	. . Shrink Tube – Control Rod	3	X	X	X
31	28-16253-6	. . Rod Sleeve (Superseded by 28-16253-8)	3	X	X	X
32††	28-16143-3	. Rod End Assembly	3		X	X
32	28-16143-1	. Dog Leg Rod End (Superseded by 28-16143-3)	3	X	X	X
–††	ECD030-11	. . Bearing	1		X	X
–	MS14103-4	. . Bearing (Superseded by ECD030-11)	1	X	X	X
33	AN320-8	. Nut	3	X	X	X
34	MS24665-302	. Cotter Pin	3	X	X	X
34	AN381-3-16	. Cotter Pin (Superseded by MS24665-302)	3	X	X	X
35†	28-16043-13	. Bracket	1	X	X	X
36†	NAS6603H2	. Bolt	2	X	X	X

FIGURE 9-12. UPPER SWASHPLATE ASSEMBLY AND CONTROLS

ITEM NUMBER	PART NUMBER	DESCRIPTION	QTY PER ASSY	EFFECTIVITY		
				TH-28	480	480B
36†	AN3H4A	. Bolt (Superseded by NAS6603H2)	2	X	X	X
36†	AN502-10-10	. Screw (Alternate)	2	X	X	X
37†♦	NAS1149F0332P	. Washer	2		X	X
37†	AN960-10L	. Washer (Superseded by NAS1149F0332P)	2	X	X	X
38†	28-16043-15	. Interrupter	A/R	X	X	X
39†♦	MS35649-282	. Nut	A/R		X	X
39†	AN340-832	. Nut (Superseded by MS35649-282)	A/R	X	X	X

* Required when equipped with Main Rotor Transmission, P/N 4130030-1 or 4130060-1 or 480 S/N 5042 and subsequent.

** Used on TH-28, S/N 3004 thru 3006; 480, S/N 5001 thru 5012 and 5015.

† Optional equipment for Tracking Main Rotor System.

‡ Refer to Service Directive Bulletin T-019.

° Replaces the 28-16109-1 bolt in production. 28-16109-11 may be used with bearing housing 28-16108-2 for service.

°° Effectivity 480 S/N 5041 and prior.

≡ See Appendix A for equivalent part information.

● Effectivity 480B S/N 5161 and subsequent. Retrofittable to 480 S/N 5001 to 5041 and 480B S/N 5042 and subsequent.

†† Effectivity 480B S/N 5207 and subsequent. Retrofittable to 480 S/N 5001 – 5041 and 480B S/N 5042 and subsequent.

♦ Effectivity 480B S/N 5210 and subsequent. Retrofittable to 480 S/N 5001 – 5041 and 480B S/N 5042 and subsequent.

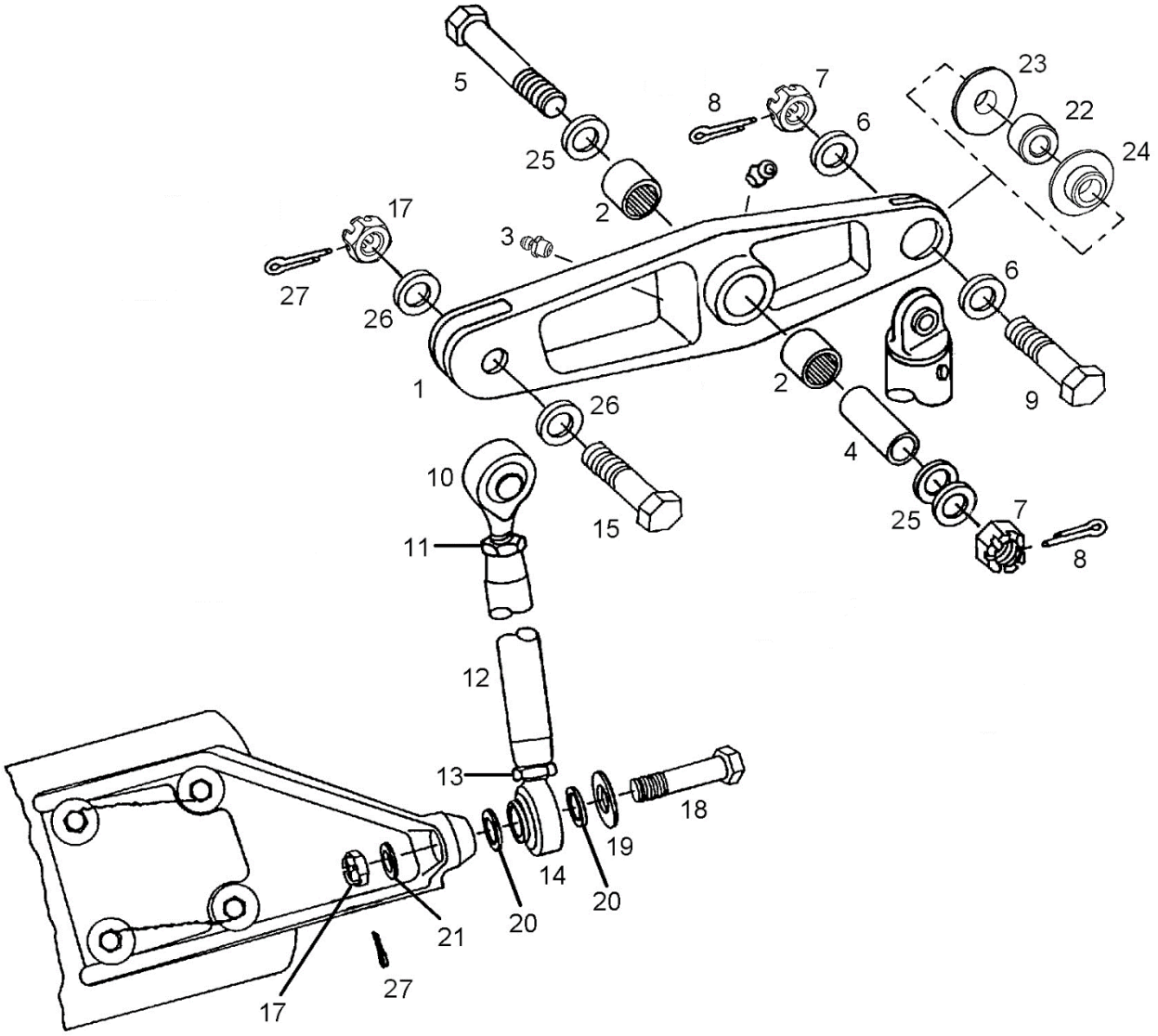

FIGURE 9-13. MAIN ROTOR PITCH CHANGE CONTROLS

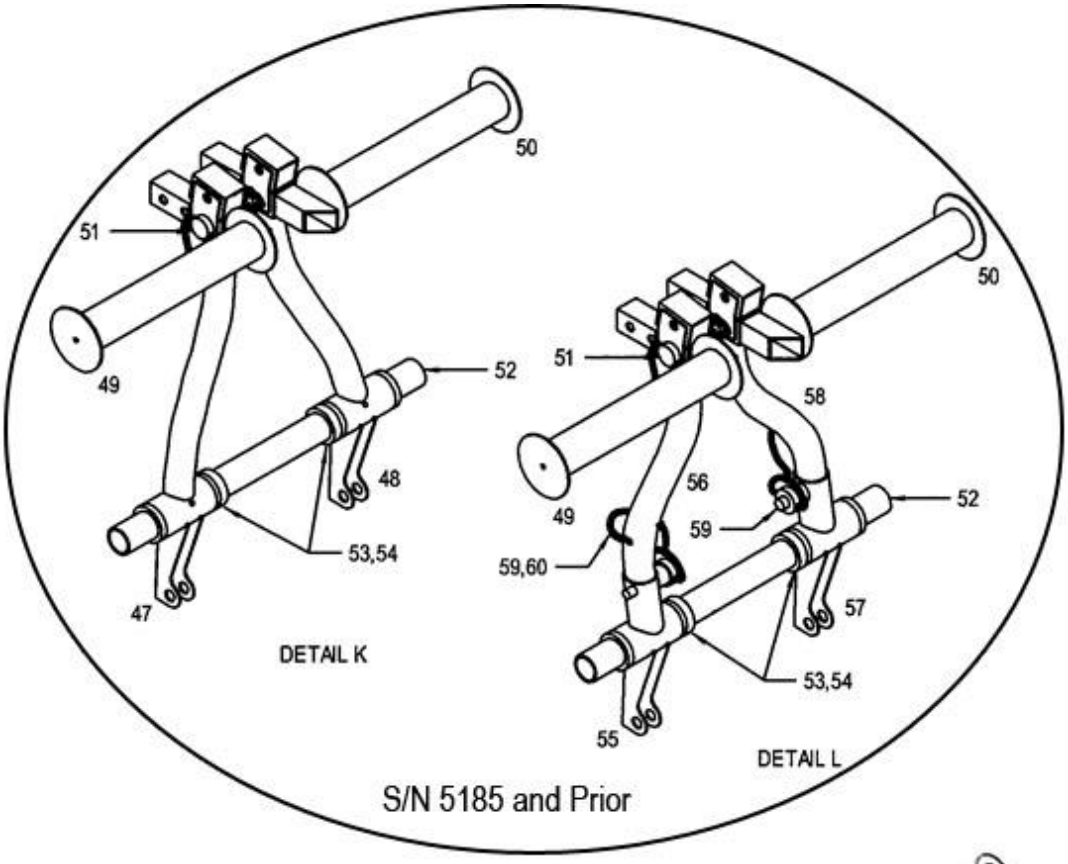

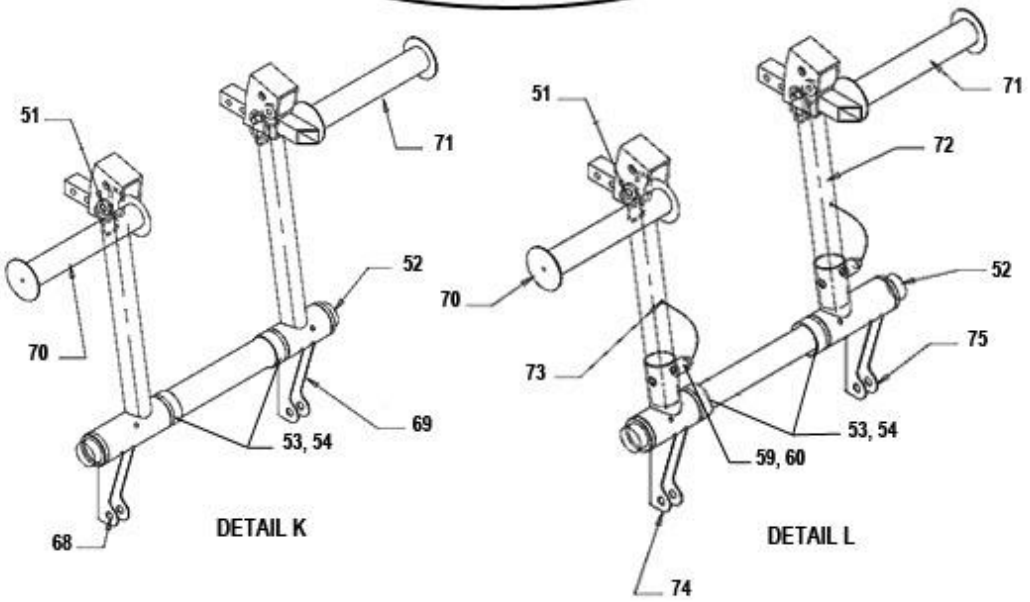

Sheet 4 of 5

FIGURE 9-14. TAIL ROTOR CONTROL SYSTEM (DUAL CONTROL)

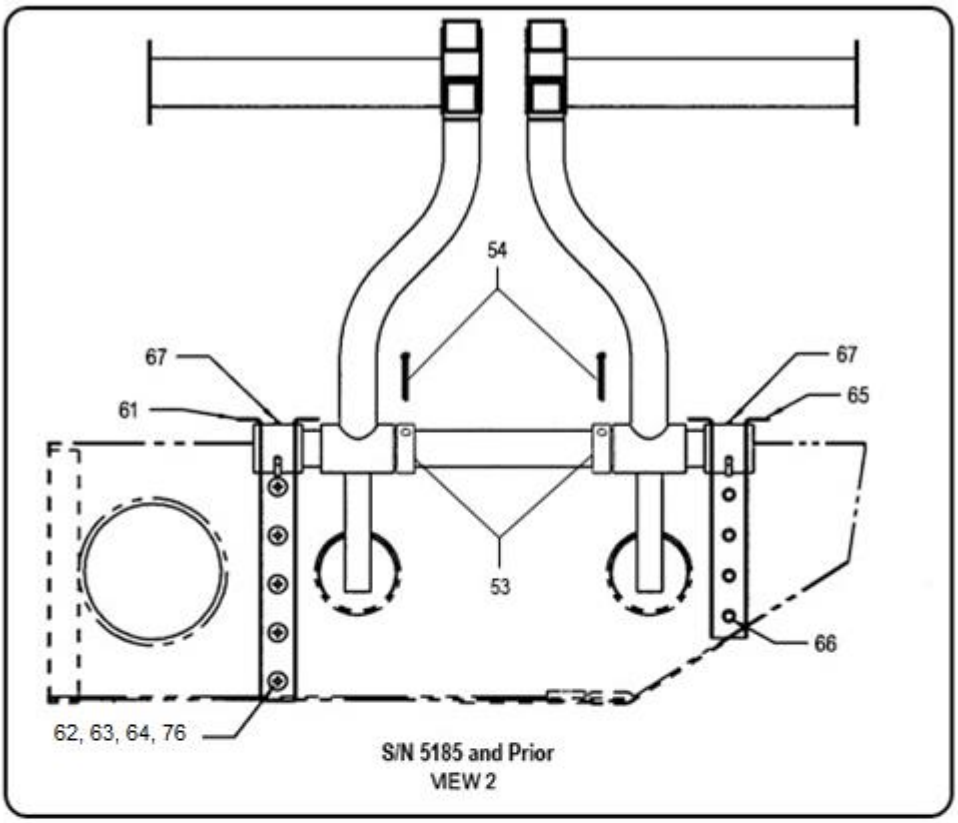

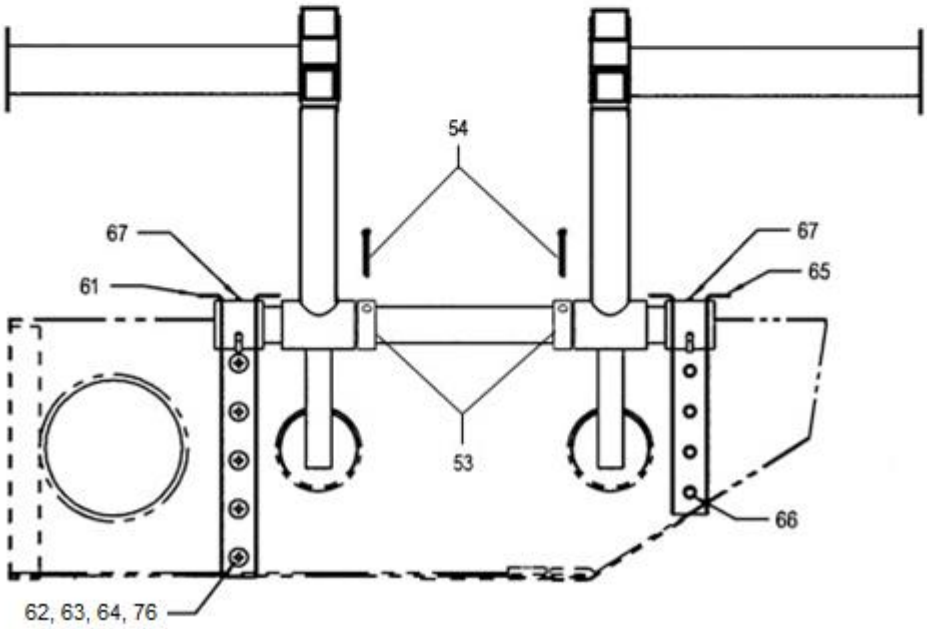

VIEW 2

Sheet 5 of 5

FIGURE 9-14. TAIL ROTOR CONTROL SYSTEM (DUAL CONTROL)

FIGURE 9-14. TAIL ROTOR CONTROL SYSTEM (DUAL CONTROL)

ITEM NUMBER	PART NUMBER	DESCRIPTION	QTY PER ASSY	EFFECTIVITY		
				TH-28	480	480B
–	4168001-9	Tail Rotor System Installation	REF		X	X
–	4168001-7	Tail Rotor System Installation (Superseded by 4168001-9)	REF		X	X
–	4168001-5	Tail Rotor System Installation (Single Control)	REF		X	X
–‡	4168001-1	Tail Rotor System Installation	REF		X	X
1	4150008-1	. Cable Assembly	2	X	X	X
2	4150008-5	. Cable Assembly	2	X	X	X
3	4166050-207	. Control Rod Assembly	1	X	X	X
–	4166036-47	. . Tube	1	X	X	X
4	HMVV4M	. . Bearing, Rod End	1	X	X	X
5	AN316-4R	. . Nut	1	X	X	X
6	AN316-4L	. . Nut	1	X	X	X
7	HMLVV4M	. . Bearing, Rod End	1	X	X	X
8	4166037-1	. Push/Pull Rod Assembly	4	X	X	X
–	4166038-11	. . Link	1	X	X	X
9	HMVV4M	. . Bearing, Rod End	1	X	X	X
10	AN316-4R	. . Nut	1	X	X	X
11	AN316-4L	. . Nut	1	X	X	X
12	HMLVV4M	. . Bearing, Rod End	1	X	X	X
13	4132008-5	. Bellcrank Assembly	2	X	X	X
14	NAS6204-9D	. Bolt	4	X	X	X
15	NAS1149D0463H	. Washer	A/R	X	X	X
15	AN960D416	. Washer (Alternate)	A/R	X	X	X
15	NAS1149D0416H	. Washer	A/R	X	X	X
15	AN960D416L	. Washer (Alternate)	A/R	X	X	X
16	NAS1149D0463H	. Washer	16	X	X	X
16	AN960D416	. Washer (Alternate)	16	X	X	X
17	MS17826-4	. Nut	12	X	X	X
18	MS24665-1013	. Cotter Pin	26	X	X	X
18	AN381-2-7	. Cotter Pin (Superseded by MS24665-1013)	26	X	X	X
19	NAS6204-26D	. Bolt	2	X	X	X
20	NAS6204-16D	. Bolt	2	X	X	X
21	4132014-19	. Bushing	2	X	X	X
22	4132014-15	. Spacer	4	X	X	X
23	4132014-23	. Control Link	4	X	X	X
24	NAS73-4E002	. Spacer	2	X	X	X
25	NAS6603D14	. Bolt	2	X	X	X
25	AN3-12	. Bolt (Superseded by NAS6603D14)	2	X	X	X
26	NAS1149F0332P	. Washer	8	X	X	X

FIGURE 9-14. TAIL ROTOR CONTROL SYSTEM (DUAL CONTROL)

ITEM NUMBER	PART NUMBER	DESCRIPTION	QTY PER ASSY	EFFECTIVITY		
				TH-28	480	480B
26	AN960-10L	. Washer (Alternate)	8	X	X	X
27	NAS73-4E004	. Bushing	4	X	X	X
28	MS17825-3	. Nut	16	X	X	X
28	F12NE-4753-02	. Nut (Superseded by MS17825-3)	16	X	X	X
29	NAS428K4A10	. Bolt	2	X	X	X
29	NAS428K4-10	. Bolt (Replaced by NAS428K4A10)	2	X	X	X
30	AN315-4R	. Nut	2	X	X	X
31	NAS1068-4	. Nut Plate	2	X	X	X
31	MS21075L4	. Nut Plate (Alternate)	2	X	X	X
32	MS20426AD3-5	. Rivet	4	X	X	X
33	MS21251-B3S	. Barrel	2	X	X	X
33	MS21251-B3L	. Barrel (Alternate)	2	X	X	X
34	MS21255-3RS	. Eye	2	X	X	X
35	MS21255-3LS	. Eye	2	X	X	X
36	MS21256-1	. Clip	4	X	X	X
36	MS21256-2	. Clip (Alternate, Use With MS21251-B3L)	4	X	X	X
37	AN100C4	. Thimble	4	X	X	X
38 ≡	428-3-VG	. Nicopress Sleeve	4	X	X	X
39*	MS24566-2B	. Pulley	10	X	X	X
40	NAS6603D6	. Bolt	12	X	X	X
40	AN3-6	. Bolt (Superseded by NAS6603D6)	12	X	X	X
41	NAS1149F0332P	. Washer	24	X	X	X
41	AN960-10L	. Washer (Alternate)	24	X	X	X
41A	NAS1149F0363P	. Washer	A/R	X	X	X
41A	AN960-10	. Washer (Alternate)	A/R	X	X	X
42A	4168002-13	. Spacer	6	X	X	X
42	4168002-11	. Spacer	4	X	X	X
42	4168000-11	. Spacer (Superseded by 4168002-11)	4	X	X	X
43	MS24665-300	. Cotter Pin	10	X	X	X
43	AN381-3-12	. Cotter Pin (Superseded by MS24665-300)	10	X	X	X
44	28-16352-1	. Link	4	X	X	X
45	NAS6603D4	. Bolt	2	X	X	X
45	AN3-5	. Bolt (Superseded by NAS6603D4)	2	X	X	X
46	NAS1149F0363P	. Washer	8	X	X	X
46	AN960-10	. Washer (Alternate)	8	X	X	X
47	4150006-3	. Pedal Leg Assembly	1	X	X	X
–	28-16332-1	. . Bushing	2	X	X	X
48	4150006-6	. Pedal Leg Assembly	1	X	X	X

FIGURE 9-14. TAIL ROTOR CONTROL SYSTEM (DUAL CONTROL)

ITEM NUMBER	PART NUMBER	DESCRIPTION	QTY PER ASSY	EFFECTIVITY		
				TH-28	480	480B
–	28-16332-1	. . Bushing	2	X	X	X
49	4150004-1	. Foot Support	2	X	X	X
50	4150004-2	. Foot Support	2	X	X	X
51♦	4150017-11	. Pin	4	X	X	X
52♦	4150003-15	. Shaft	2	X	X	X
53♦	28-16341-1	. Spacer	4	X	X	X
54♦	MS24665-323	. Cotter Pin	4	X	X	X
55	4150013-3	. Stub Assembly	1	X	X	X
–	28-16332-1	. . Bushing	2	X	X	X
56	4150011-3	. Pedal Leg Assembly	1	X	X	X
57	4150013-4	. Stub Assembly	1	X	X	X
–	28-16332-1	. . Bushing	2	X	X	X
58	4150011-4	. Pedal Leg Assembly	1	X	X	X
59●	MS17987C409	. Pin	2	X	X	X
60●	L47N-600-3	. Lanyard	2	X	X	X
60●	90312A11	. Lanyard (Replaced by L47N-600-3)	2	X	X	X
61♦	4118798-5	. Mounting Bracket	2	X	X	X
62♦	MS21044N08	. Nut	10	X	X	X
62	AN365-832A	. Nut (Superseded by MS21044N08)	10	X	X	X
62	AN365-832	. Nut (Superseded by AN365-832A)	10	X	X	X
63♦	AN526-832R7	. Screw	10	X	X	X
63	AN526-832R8	. Screw (Superseded by AN526-832R7)	10	X	X	X
63	AN526-8R8	. Screw (Superseded by AN526-832R8)	10	X	X	X
64	NAS1149FN816P	. Washer	10	X	X	X
64♦	AN960-8L	. Washer (Alternate)	10	X	X	X
65♦	4118798-7	. Mounting Bracket	2	X	X	X
66♦	MS20470AD5-4	. Rivet	8	X	X	X
67♦	MS24665-389	. Cotter Pin	4	X	X	X
67	MS24665-357	. Cotter Pin (Superseded by MS24665-389)	4	X	X	X
–	4119804-21	. T/R Pedal Scuff Plate, Pilot, Left	1	X	X	X
–	4119804-22	. T/R Pedal Scuff Plate, Co-Pilot, Right	1	X	X	X
–	4119804-23	. T/R Pedal Scuff Plate, Co-Pilot, Left	1	X	X	X
–	4119804-24	. T/R Pedal Scuff Plate, Pilot, Right	1	X	X	X
–**	4119855-11	. Pedal Cover	1	X	X	X
68†	4150018-101	. Pedal Leg Assembly	1		X	X
–	28-16332-3	. . Bushing	2	X	X	X
–	28-16332-1	. . Bushing (Replaced by 28-16332-3)	2	X	X	X

FIGURE 9-14. TAIL ROTOR CONTROL SYSTEM (DUAL CONTROL)

ITEM NUMBER	PART NUMBER	DESCRIPTION	QTY PER ASSY	EFFECTIVITY		
				TH-28	480	480B
68	4150018-1	. Pedal Leg Assembly (Superseded by 4150018-101)	1		X	X
69	4150018-8	. Pedal Leg Assembly	1		X	X
–	28-16332-3	. . Bushing	2	X	X	X
–	28-16332-1	. . Bushing (Replaced by 28-16332-3)	2	X	X	X
70♦	4150004-3	. ADJ Foot Support	2		X	X
71♦	4150004-4	. ADJ Foot Support	2		X	X
72	4150018-7	. Pedal Leg Assembly	2		X	X
73∞	CR3213-4-02	. Rivet	2		X	X
73●	CR3213-4-03	. Rivet (Replaced by CR3213-4-02)	2		X	X
74●	4150018-9	. Pivot Weld Assembly	1		X	X
75●	4150018-6	. Pivot Weld Assembly	1		X	X
76▼	4168001-11	. Shim	A/R		X	X

*	Early production TH-28 and 480 aircraft have a pulley located approximately midpoint on the outboard side of the keel beams. These aircraft have a total of twelve (12) pulleys.
**	Install the cover when the co-pilot pedals are removed.
≡	See Appendix A for equivalent part information.
†	Used with 4168001-9 Tail Rotor System Installation.
‡	Effectivity 480B S/N 5185 and prior.
●	Not installed with 4168001-5 installation.
♦	Quantities halved for 4168001-5 installation.
∞	Add 2 rivets for 4168001-1 installation.
▼	Co-pilot side only if washers, Item 64, interfere with keel flange radius.

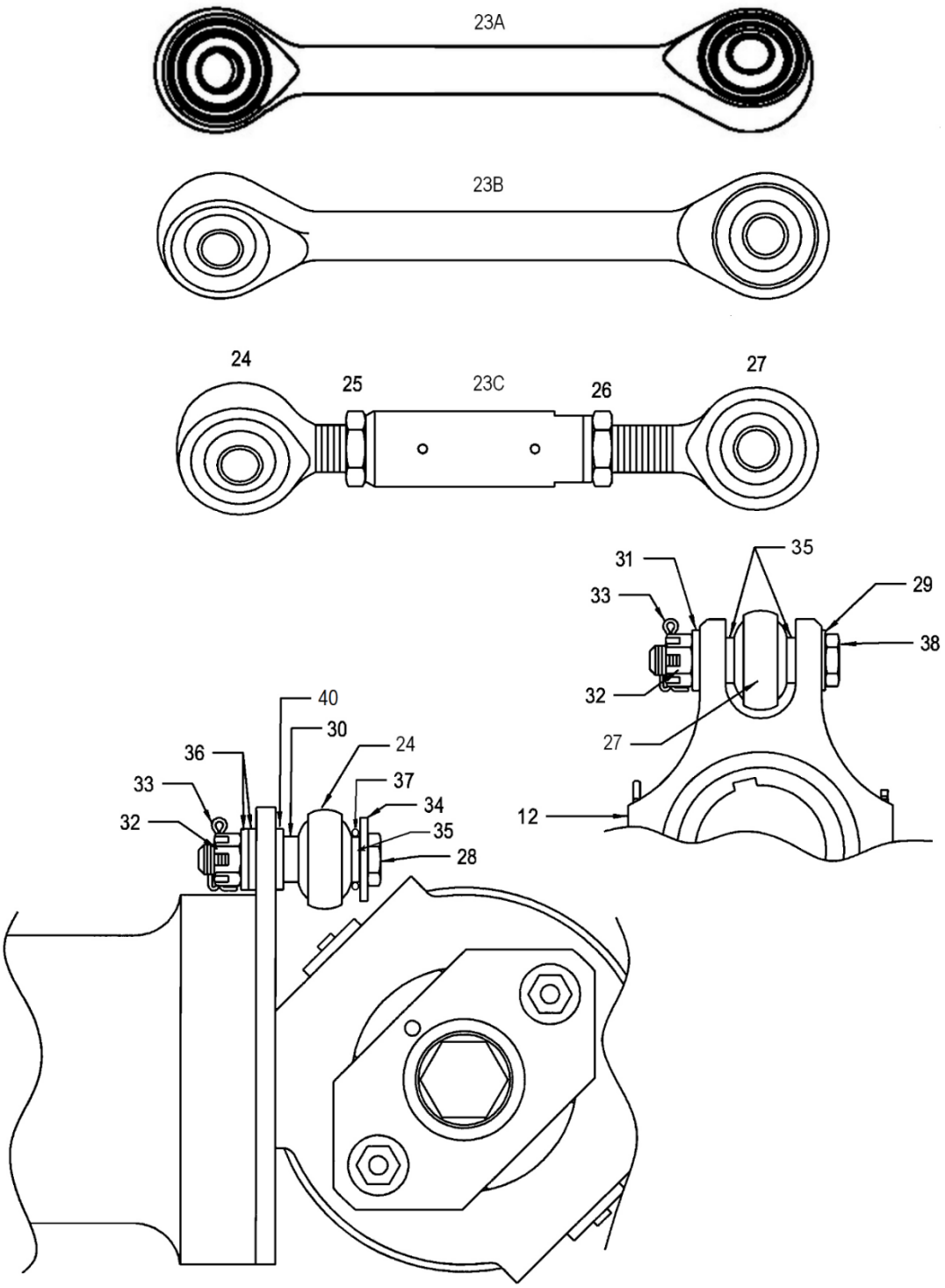

Sheet 2 of 2

FIGURE 9-15. TAIL ROTOR ROTATING CONTROLS

FIGURE 9-15. TAIL ROTOR ROTATING CONTROLS

ITEM NUMBER	PART NUMBER	DESCRIPTION	QTY PER ASSY	EFFECTIVITY		
				TH-28	480	480B
–	4132000-9	Tail Rotating Controls Assembly/Installation	REF	X	X	X
1▲	28-16313-1	. Bracket	1	X	X	X
2	28-16319-1	. . Bushing	2	X	X	X
3▲	28-16314-1	. Bracket	1	X	X	X
4	AN503-10-18	. Screw	4	X	X	X
5	NAS1149F0332P	. Washer	4	X	X	X
5	AN960-10L	. Washer (Alternate)	4	X	X	X
–	28-16396-2	. Bearing Housing and Pitch Link Retainer Assembly	1	X	X	X
6	28-16331-1	. . Bearing Housing	1	X	X	X
7	28-16394-11	. . Bearing	1	X	X	X
8	TS-023	. . Seal	1	X	X	X
9	ECD016-11	. . Bearing	1	X	X	X
10	N5002-268-PP	. . Retaining Ring	1	X	X	X
11	W-47	. . Washer	2	X	X	X
12	28-16392-13	. . Pitch Change Link Retainer	1	X	X	X
13	28-16397-11	. . Pin	2	X	X	X
14	MS24665-155	. . Cotter Pin	2	X	X	X
14	AN381-2-16	. . Cotter Pin (Superseded by MS24665-155)	2	X	X	X
15	TS-023	. Seal	1	X	X	X
16	28-16374-1	. Seal Retainer	1	X	X	X
17	28-16395-1	. Key	2	X	X	X
18	28-16310-2	. Bolt	2	X	X	X
19	28-16308-1	. Washer	2	X	X	X
20	NAS1149F0532P	. Washer	2	X	X	X
20	AN960-516L	. Washer (Alternate)	2	X	X	X
21	F12NE4717-054	. Nut	2	X	X	X
22	MS24665-151	. Cotter Pin	2	X	X	X
22	AN381-2-10	. Cotter Pin (Superseded by MS24665-151)	2	X	X	X
23A‡	28-16391-5	. Tail Rotor Pitch Link Assembly	2		X	X
23A†	28-16391-3	. Tail Rotor Pitch Link Assembly (Superseded by 28-16391-5)	2	X	X	X
23B●	28-16391-1	. Tail Rotor Pitch Link Assembly (Superseded by 28-16391-3)	2	X	X	X
23C	28-16398-901	. Tail Rotor Pitch Link Assembly (Superseded by 28-16391-1)	2	X	X	X
–†	28-16345-11	. . Barrel Link Pitch	1	X	X	X

FIGURE 9-15. TAIL ROTOR ROTATING CONTROLS

ITEM NUMBER	PART NUMBER	DESCRIPTION	QTY PER ASSY	EFFECTIVITY		
				TH-28	480	480B
–	28-16345-1	. . Barrel Link Pitch (Superseded by 28-16345-11)	1	X	X	X
24	11-691-04	. . Bearing, Rod-End, 1/4" Male Left Hand	1	X	X	X
25	AN316-5L	. . Nut: Jam, 5/16-24 UNF-3B Left Hand	1	X	X	X
26	AN316-5R	. . Nut: Jam (Used with 28-16391-901)	1	X	X	X
27	01-691-04	. . Rod-End (Used with 28-16391-901) (R/H Thread)	1	X	X	X
–	ECD030-11	. . Spherical Bearing	2	X	X	X
28	NAS6604D15	. Bolt	2	X	X	X
28	AN4-13	. Bolt (Superseded by NAS6604D15)	2	X	X	X
29	NAS1149F0432P	. Washer	2	X	X	X
29	AN960-416L	. Washer (Alternate)	2	X	X	X
30	28-16353-3	. Spacer	2	X	X	X
31	NAS1149F0463P	. Washer	2	X	X	X
31	AN960-416	. Washer (Alternate)	2	X	X	X
32	MS17825-4	. Nut	4	X	X	X
33	MS24665-1013	. Cotter Pin	4	X	X	X
34†	ECD050-11	. Washer, Flat	2	X	X	X
35	28-16353-5	. . Spacer	6	X	X	X
36*	NAS1149C0463R	. Washer	A/R	X	X	X
36*	NAS1149C0432R	. Washer	A/R	X	X	X
36*†	ECD050-11	. Washer, Flat	A/R	X	X	X
37	MS28775-111	. O-Ring	2	X	X	X
38**	NAS6604D15	. Bolt	2	X	X	X
38**	AN4-13	. Bolt (Superseded by NAS6604D15)	2	X	X	X
38	AN4-14	. Bolt (Superseded by AN4-13)	2	X	X	X
39	28-16311-1	. Hat Bushing	4	X	X	X
40	NAS1149C0463R	. Washer	2	X	X	X

* Use as required for dynamically balancing the tail rotor. See also SIL T-027, latest revision.

** Effectivity S/N 5146 and subsequent. Retrofittable to 480 S/N 5042, 480B S/N 5001 and subsequent.

† Effectivity 480B S/N 5160 and subsequent. Retrofittable to 480 S/N 5001 – 5041, 480B S/N 5042 and subsequent.

● Effectivity 480B S/N 5061 and subsequent. Retrofittable to 480 S/N 5001 – 5041, 480B S/N 5042 and subsequent.

‡ Effectivity 480B S/N 5207 and subsequent. Retrofittable to 480 S/N 5001 – 5041, 480B S/N 5042 and subsequent.

⧺ See Appendix B for hardware substitution information.

▲ Must be replaced/purchased as a matched set.

SECTION 10 – TABLE OF CONTENTS

	Cover	10-1
	Table of Contents	10-1.2
10-1	TH-28 Instrument Panel Equipment Installation	10-2
10-2	480 Standard Instrument Panel Equipment Installation	10-8
10-3	480 (Optional)/480B Instrument Panel Equipment Installation	10-16
10-4	480B Instrument Panel Equipment Installation	10-22
10-5	TH-28 Circuit Breaker Panel	10-30
10-6	480 Circuit Breaker Panel	10-32
10-7	480 Optional Circuit Breaker Panel	10-34
10-8	480B Circuit Breaker Panel	10-36
10-9	480B Circuit Breaker Panel	10-38
10-10	Pedestal Miscellaneous Equipment	10-44
10-11	Outside Air Temperature (OAT) Gauge Installation	10-46
10-12	NiCad Battery Tray Installation	10-48
10-13	Standard Battery Tray Installation	10-50
10-14	Battery Installation	10-54
10-15	Aft Battery Installation	10-56
10-16	Electrical Component Installation (Right Side Backwall)	10-58
10-17	Electrical Component Installation Relays Only (Right Side Backwall)	10-61
10-18	Electrical Components - Keel Installation	10-66
10-19	Generator Control Unit/T9 Terminal Strip Installation	10-72
10-20	Engine Oil Pressure and Torque Indication System	10-74
10-21	Engine T.O.T. Harness Terminal Block	10-76
10-22	Fire Detector Installation	10-78
10-23	Low Rotor Warning and Micro Switch Installation	10-80
10-23.1	Hi/Lo Rotor RPM Switch Installation	10-83.1
10-24	TH-28 Chip Detector Program Continuity Sensor Installation	10-84
10-24.1	480/480B Programmed Continuity Sensors – Engine and Main Rotor Transmission Chip Detectors	10-86.2
10-24.2	480/480B Programmed Continuity Sensor – Tail Rotor Transmission Chip Detector	10-86.6
10-25	Bearing Temperature Warning System (Grease Lubricated)	10-88
10-26	Bearing Temperature Warning System (Oil Lubricated)	10-90
10-27	Engine Air Inlet Pressure System	10-94
10-28	Landing Light Assembly Installation	10-98
10-29	LED Landing Light Assembly Installation	10-100
10-30	Position/Anti-Collision Light Installation	10-104
10-31	Position/Anti-Collision Light Assembly	10-106
10-32	Position/Anti-Collision LED Light Assembly	10-108
10-33	Static Port and Pitot Tube Installation	10-110
10-34	Static and Pitot Line Installation	10-114
10-35	Instrument Console Shroud Installation	10-118
10-36	KMA 24H-71 Audio Panel Installation	10-120
10-37	GTX 327 Transponder Installation	10-124
10-38	GTX 327 Antenna Installation Forward (Preferred) Location	10-128
10-39	GTX 327 Antenna Installation Aft (Alternate) Location	10-132

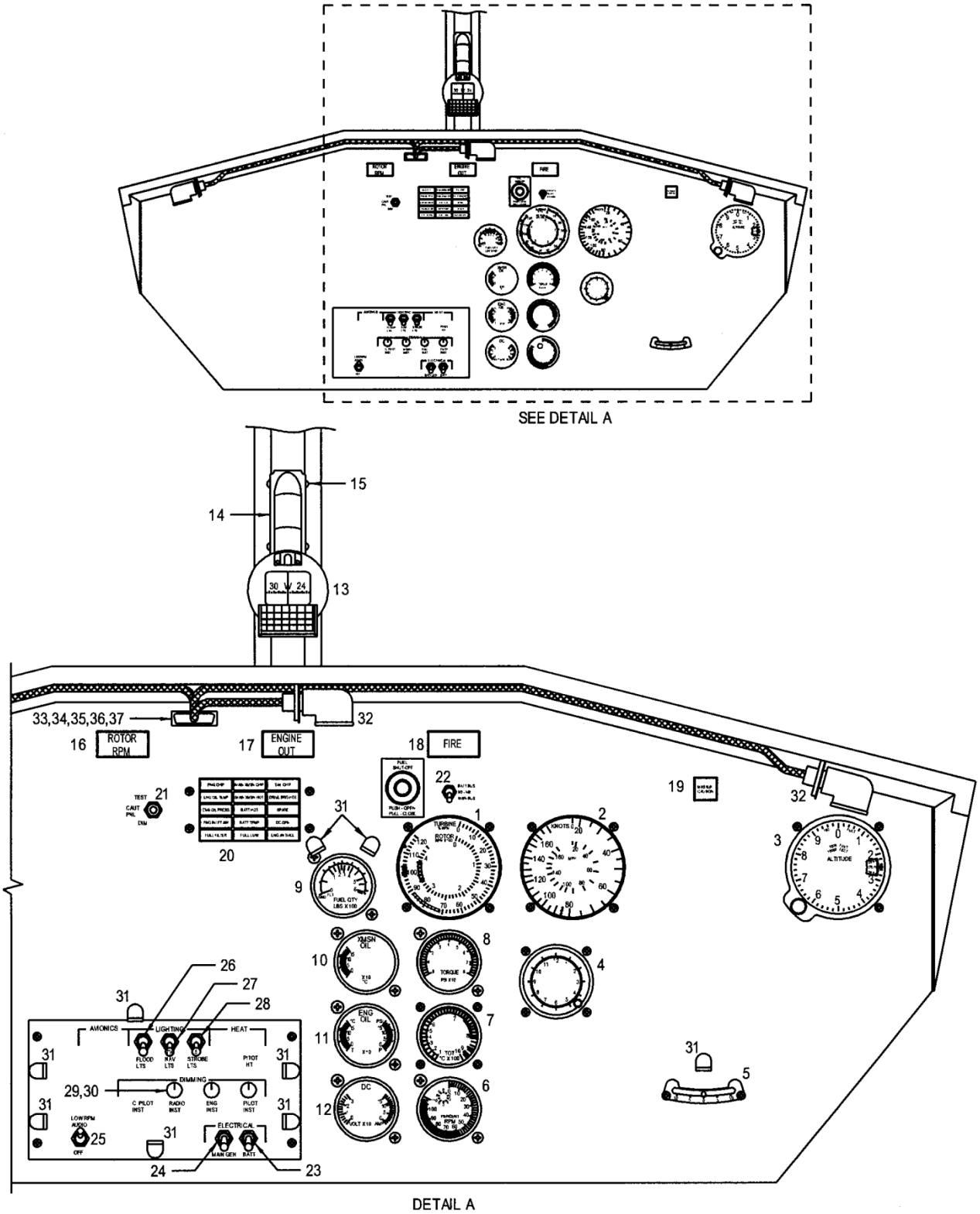

Standard Equipment

FIGURE 10-1. TH-28 INSTRUMENT PANEL EQUIPMENT INSTALLATION

FIGURE 10-8. 480B CIRCUIT BREAKER PANEL

ITEM NUMBER	PART NUMBER	DESCRIPTION	QTY PER ASSY	EFFECTIVITY		
				TH-28	480	480B
1	AP-1-3-50-051	. Switch (Generator)	1			X
2	11TS15-2	. Switch (Battery)	1			X
3	7270-1-5	. Switch/Circuit Breaker (Position Lights)	1			X
4	7270-1-7 1/2	. Switch/Circuit Breaker (Navigation Lights)	1			X
5	7270-1-5	. Switch/Circuit Breaker (Panel Lights)	1			X
6	7277-5-2	. Circuit Breaker, 2 Amp	12			X
7	7277-5-3	. Circuit Breaker, 3 Amp	1			X
8	7277-5-1 1/2	. Circuit Breaker, 1 1/2 Amp	4			X
9	7277-5-10	. Circuit Breaker, 10 Amp	2			X
10▼	P261P-S1AS3CB1K	. Potentiometer	3			X
10 ≡	381N-500-S	. Potentiometer (Replaced by P261P-S1AS3CB1K)	3			X
11≡	KN500B1/8	. Knob	3			X

≡ See Appendix A for equivalent part information.

▼ Effectivity 480B S/N 5258 and subsequent. Retrofittable 480B S/N 5042 and subsequent.

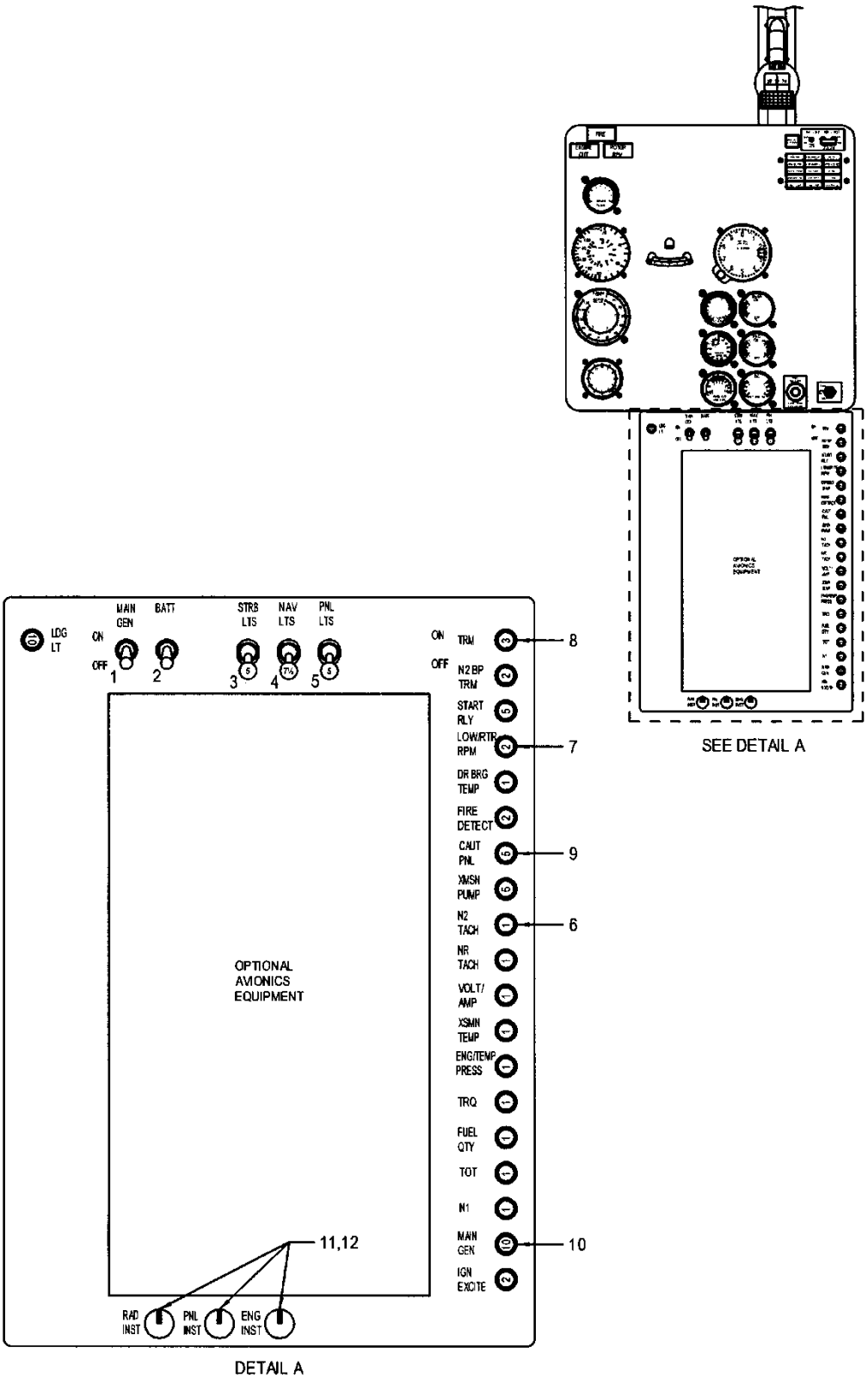

Sheet 1 of 4
Standard Equipment
S/N: 5046, 5048-5077, 5079-5084

FIGURE 10-9. 480B CIRCUIT BREAKER PANEL

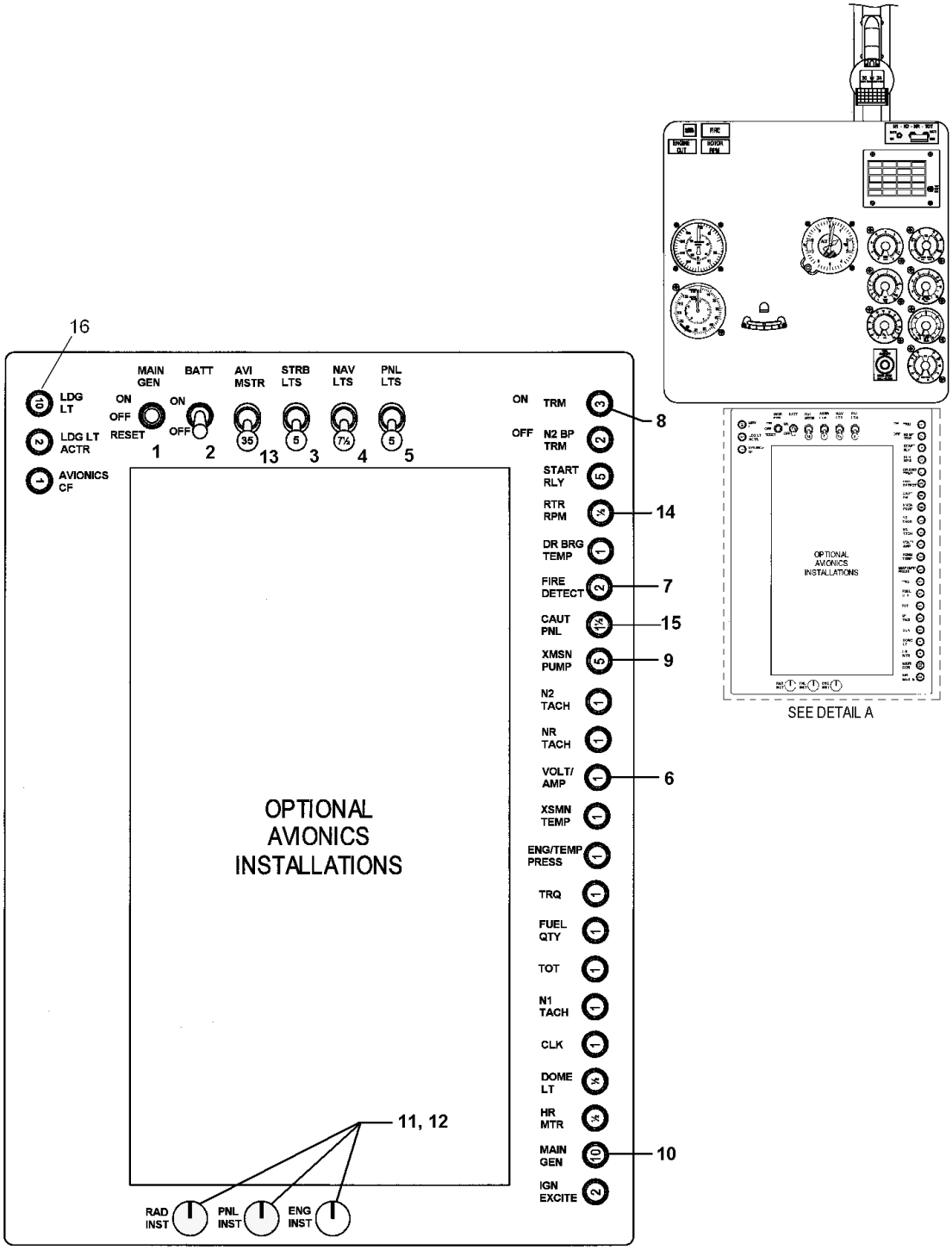

Sheet 4 of 4
Standard Equipment
S/N: 5136 and Subsequent

FIGURE 10-9. 480B CIRCUIT BREAKER PANEL

FIGURE 10-9. 480B CIRCUIT BREAKER PANEL

ITEM NUMBER	PART NUMBER	DESCRIPTION	QTY PER ASSY	EFFECTIVITY		
				TH-28	480	480B
1*	AP-1-3-50-051	. Switch (Generator)	1			X
1**	MS24524-31	. Switch Generator)	1			X
2	11TS15-2	. Switch (Battery)	1			X
3	7270-1-5	. Switch/Circuit Breaker (Position Lights)	1			X
4	7270-1-7 1/2	. Switch/Circuit Breaker (Navigation Lights)	1			X
5	7270-1-5	. Switch/Circuit Breaker (Panel Lights)	1			X
6	7277-5-1	. Circuit Breaker, 1 Amp	10			X
6‡	7277-5-1 1/2	. Circuit Breaker, 1 1/2 Amp	1			X
7	7277-5-2	. Circuit Breaker, 2 Amp	4			X
8	7277-5-3	. Circuit Breaker, 3 Amp	1			X
9	7277-5-5	. Circuit Breaker, 5 Amp	3			X
10	7277-5-10	. Circuit Breaker, 10 Amp	2			X
11▼	P261P-S1AS3CB1K	. Potentiometer	3			X
11 ≡	381N-500-S	. Potentiometer (Replaced by P261P-S1AS3CB1K)	3			X
12≡	KN500B1/8	. Knob	3			X
13	7270-1-35	. Switch/Circuit Breaker (Avionics Master)	1			X
14	7277-5-1/2	. Circuit Breaker, 1/2 Amp	1			X
15	7277-5-1 1/2	. Circuit Breaker, 1 1/2 Amp	1			X
16	7277-5-10	. Circuit Breaker, 10 Amp (Landing Light)	1			X
16	7277-5-10	. Circuit Breaker, 5 Amp (LED Landing Light)	1			X

Note: Circuit breaker locations per customer requirements.

* 480B S/N 5046, 5048 through 5077, and 5079 through 5084.

** 480B S/N 5078 and 5085 and subsequent.

≡ See Appendix A for equivalent part information.

‡ Effectivity 480B S/N 5136 and subsequent. Retrofittable to 480B S/N 5042 and subsequent.

▼ Effectivity 480B S/N 5258 and subsequent. Retrofittable to 480B S/N 5042 and subsequent.

INTENTIONALLY LEFT BLANK

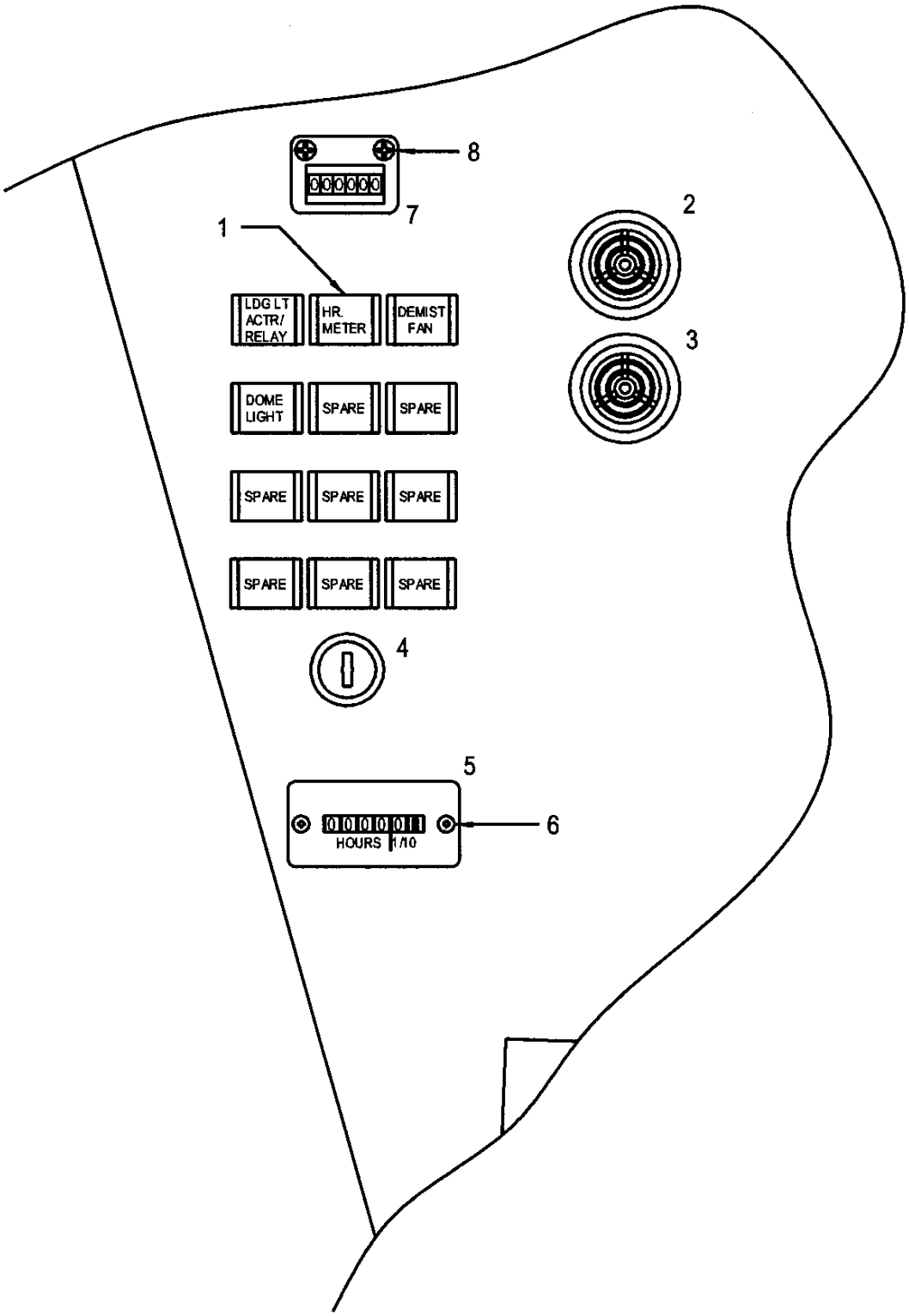

FIGURE 10-10. PEDESTAL MISCELLANEOUS EQUIPMENT

FIGURE 10-10. PEDESTAL MISCELLANEOUS EQUIPMENT

ITEM NUMBER	PART NUMBER	DESCRIPTION	QTY PER ASSY	EFFECTIVITY		
				TH-28	480	480B
1*	286377	. Fuse Retainer	9		X	X
–**	229001	. Fuse, 1 Amp	A/R		X	X
–**	229002	. Fuse, 2 Amp	A/R		X	X
–**	229003	. Fuse, 3 Amp	A/R		X	X
–**	229007	. Fuse, 7 Amp	A/R		X	X
2	SC628DR	. Horn (Engine Out)	1		X	X
2	SC628D	. Horn (Engine Out) (Alternate)	1		X	X
3	SC628WR	. Horn (Engine Out)	1		X	X
3	SC628W	. Horn (Engine Out) (Alternate)	1		X	X
–†	SC628ANPR	. Horn (Low Rotor RPM)	1		X	X
–†	SC628ANP	. Horn (Low Rotor RPM) (Alternate)	1		X	X
4	HD6158-510-090-030H	. Switch, Ignition	1		X	X
4 ≡	HD6158-510-090-030	. Switch, Ignition (Alternate)	1		X	X
5	T14BH517BC	. Hour Meter	1		X	X
6	AN515B6R4	. Screw	2		X	X
7‡	RV8-4416	. Start Counter	1			X
8‡	AN530-6R6	. Screw	2			X

* Quantity and layout of fuse retainers will depend on installed optional equipment.

** Refer to the system schematic diagrams for specific fuse requirements.

† Located on opposite side of the pedestal.

‡ 480B S/N: 5048 and subsequent.

≡ See Appendix A for equivalent part information.

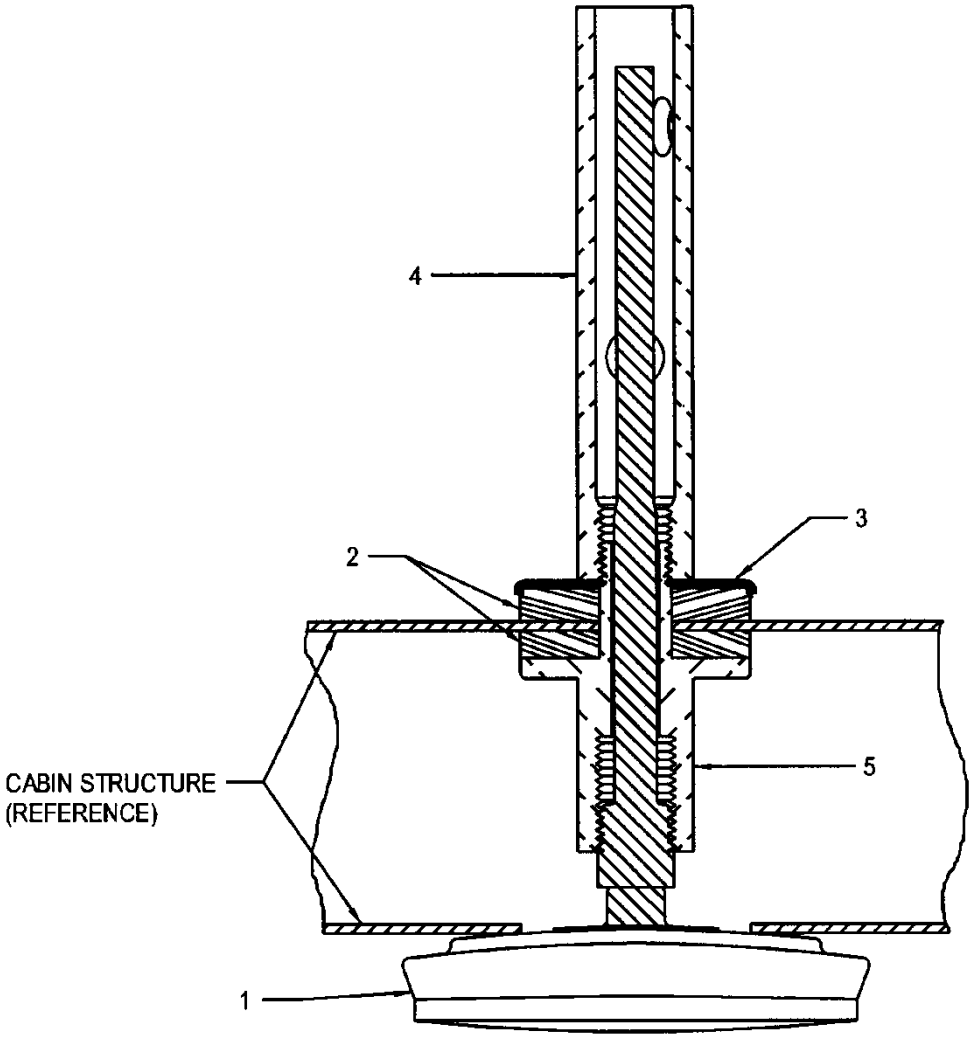

S/N: 5239 and Prior

FIGURE 10-11. OUTSIDE AIR TEMPERATURE (OAT) GAUGE INSTALLATION

FIGURE 10-12. NICAD BATTERY TRAY INSTALLATION

ITEM NUMBER	PART NUMBER	DESCRIPTION	QTY PER ASSY	EFFECTIVITY		
				TH-28	480	480B
1	4196578-1	. Battery Tray Assembly	1	X	X	X
2	F22NA1-02	. . Nut Plate	10	X	X	X
3	MS20426AD3-3	. . Rivet	20	X	X	X
4	AN3-3A	. Bolt	4	X	X	X
5	AN960-10	. Washer	8	X	X	X
6	AN364-1032A	. Nut	4	X	X	X
7	MS3115-10A	. Receptacle	1	X	X	X
8	MS20426AD3-3	. Rivet	4	X	X	X
9	4196597-1	. Receptacle	1	X	X	X
10≡	MS24694-S54	. Screw	4	X	X	X
11	AN960-10	. Washer	4	X	X	X
12	AN364-1032A	. Nut	4	X	X	X
13*	4196579-101	. Strap Assembly	1	X	X	X
13	4196579-7	. Strap Assembly (Superseded by 4196579-101)	1	X	X	X
–	4196579-19	. . Pad	1	X	X	X
–	4196579-37	. . Spacer	1	X	X	X
14	AN3-4A	. Bolt	1	X	X	X
15	AN960-10L	. Washer	2	X	X	X
16	AN364-1032A	. Nut	1	X	X	X
17*	4196551-3	. Clamp Assembly	1	X	X	X
17	4196551-1	. Clamp Assembly (Superseded by 4196551-3)	1	X	X	X
18	AN3-10A	. Bolt	2	X	X	X
19	AN960-10L	. Washer	4	X	X	X
20	AN364-1032A	. Nut	2	X	X	X
21	MS25182-2	. Connector	1	X	X	X
22	BPF 15/16	. Plug	2	X	X	X
23	MS3126F10-6S	. Connector (NICAD Battery Temperature)	1	X	X	X

≡ See Appendix A for equivalent part information.

* 4196579-7 and 4196551-1 are a set; 4196579-101 and 4196551-3 are a set. They are not interchangeable.

.

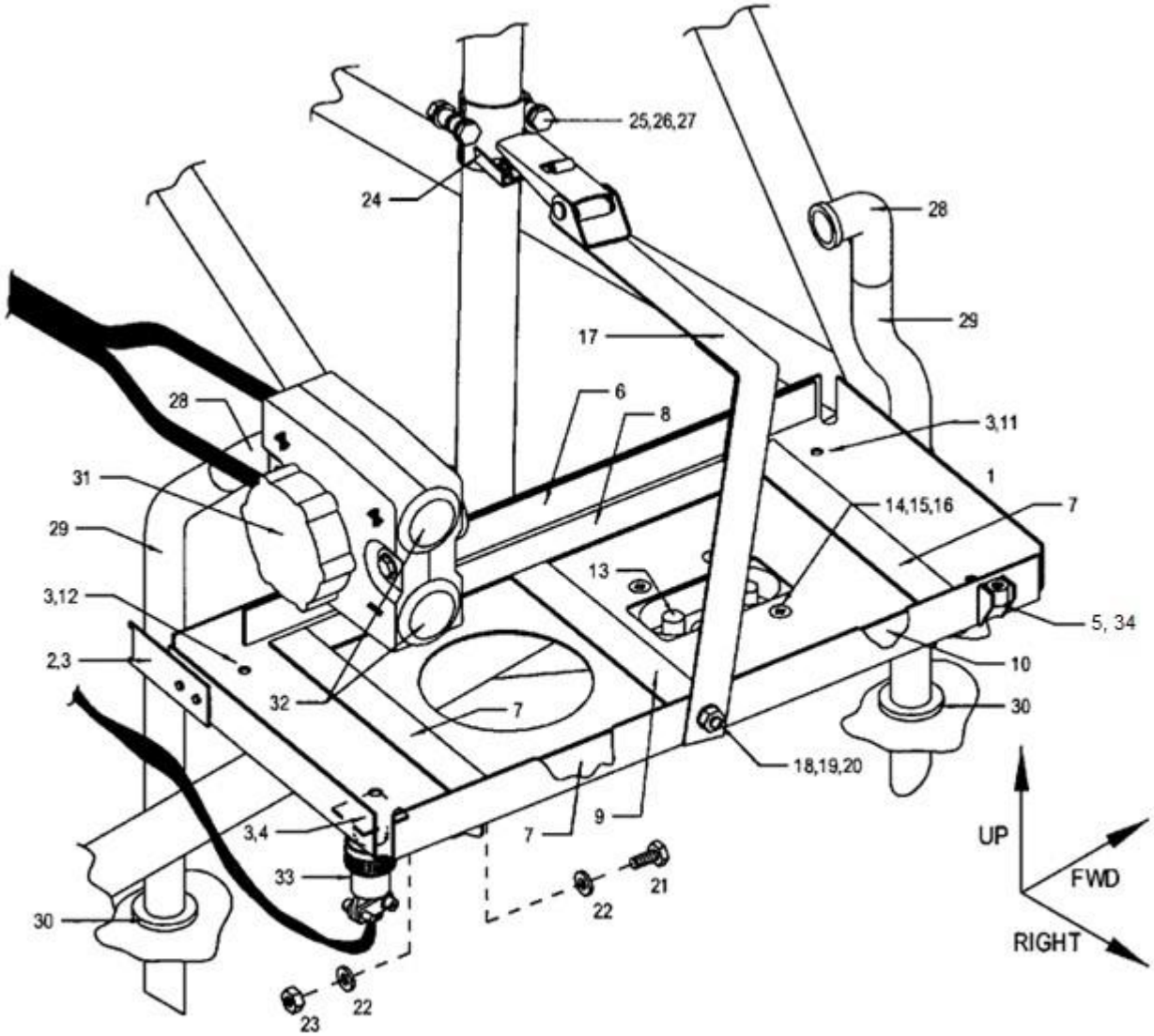

FIGURE 10-13. STANDARD BATTERY TRAY INSTALLATION

FIGURE 10-13. STANDARD BATTERY TRAY INSTALLATION

ITEM NUMBER	PART NUMBER	DESCRIPTION	QTY PER ASSY	EFFECTIVITY		
				TH-28	480	480B
–	4196578-5	Battery Tray Assembly	REF		X	X
–	4196578-3	Battery Tray Assembly (Superseded by 4196578-5)	REF	X	X	X
1	4196578-15	. Tray	1	X	X	X
2	4196579-21	. Clip	1	X	X	X
3	MS20426AD4-4	. Rivet	12	X	X	X
4	MS3115-10A	. Receptacle	1	X	X	X
5	22-NA27-68-02	. Nut Plate	2	X	X	X
5	22NA27-22-02	. Nut Plate (Alternate)	2	X	X	X
5	NAS1033A3	. Nut Plate (Alternate)	2	X	X	X
6	4196579-23	. Rubber Pad (Used with 4196578-3)	1	X	X	X
7	4196579-25	. Rubber Pad	4	X	X	X
8	4196579-31	. Rubber Pad	4	X	X	X
9	4196579-29	. Rubber Pad (Used with 4196578-3)	1	X	X	X
10	4196579-27	. Rubber Pad (Used with 4196578-3)	1	X	X	X
11	F22NA1-02	. Nut Plate (Used with 4196578-3)	5	X	X	X
12	MS21080-3	. Nut Plate (Used with 4196578-3)	1	X	X	X
–	4196578-21	. Bracket	1	X	X	X
–	4196578-17	. Spacer	1	X	X	X
–	4196578-19	. Spacer	1	X	X	X
13	4196597-1	. Receptacle	1	X	X	X
14	MS24694-S58	. Screw	4	X	X	X
14	MS24694-S54	. Screw (Superseded by MS24694-S58)	4	X	X	X
15	NAS1149D0363J	. Washer	4	X	X	X
15	AN960-10	. Washer (Replaced by NAS1149D0363J)	4	X	X	X
16	MS21083N3	. Nut	4	X	X	X
16	AN364-1032A	. Nut (Superseded by MS21083N3)	4	X	X	X
17**	4196579-9	. Strap Assembly	1		X	X
17	4196579-1	. Strap Assembly (Superseded by 4196579-9)	1	X	X	X
–	4196579-19	. . Pad	1	X	X	X
–	4196579-37	. . Spacer	1	X	X	X
18	MS24694-S49	. Screw	1	X	X	X
18	AN3-4A	. Bolt (Replaced by MS24694-S49)	1	X	X	X
19	NAS1149F0332P	. Washer	2	X	X	X
19	AN960-10L	. Washer (Alternate)	2	X	X	X
20	MS21083N3	. Nut	1	X	X	X
20	AN364-1032A	. Nut (Superseded by MS21083N3)	1	X	X	X
21	NAS6603-1	. Bolt	4	X	X	X
21	AN3-3A	. Bolt (Superseded by NAS6603-1)	4	X	X	X

FIGURE 10-13. STANDARD BATTERY TRAY INSTALLATION

ITEM NUMBER	PART NUMBER	DESCRIPTION	QTY PER ASSY	EFFECTIVITY		
				TH-28	480	480B
22	NAS1149F0363P	. Washer	8	X	X	X
22	AN960-10	. Washer (Alternate)	8	X	X	X
23	MS21083N3	. Nut	4	X	X	X
23	AN364-1032A	. Nut (Superseded by MS21083N3)	4	X	X	X
24**	4196551-3	. Clamp Assembly	1	X	X	X
24	4196551-1	. Clamp Assembly (Superseded by 4196551-3)	1	X	X	X
25	NAS6603-12	. Bolt	2	X	X	X
25	AN3-10A	. Bolt (Replaced by NAS6603-12)	2	X	X	X
26	NAS1149F0363P	. Washer	4	X	X	X
26	AN960-10L	. Washer (Alternate)	4	X	X	X
27	MS21044N3	. Nut	2	X	X	X
27	AN364-1032A	. Nut (Replaced by MS21044N3)	2	X	X	X
28*	3621	. Elbow	2	X	X	X
28*	9080494	. Elbow (Replaced by 3621)	2	X	X	X
29	520-004	. Vent Hose, 1/2" ID PVC	A/R	X	X	X
30	MS35489-18	. Grommet	2	X	X	X
30	AN931-10-20	. Grommet (Superseded by MS35489-18)	2	X	X	X
31	MS25182-2	. Connector	1	X	X	X
32	BPF 15/16	. Plug	2	X	X	X
33	MS3126F10-6S	. Connector (NICAD Battery Temperature)	1	X	X	X
34	MS20426AD3-3	. Rivet	4	X	X	X

* Effectivity S/N 5147 and subsequent.

** 4196579-1 and 4196551-1 are a set; 4196579-9 and 4196551-3 are a set. They are not interchangeable.

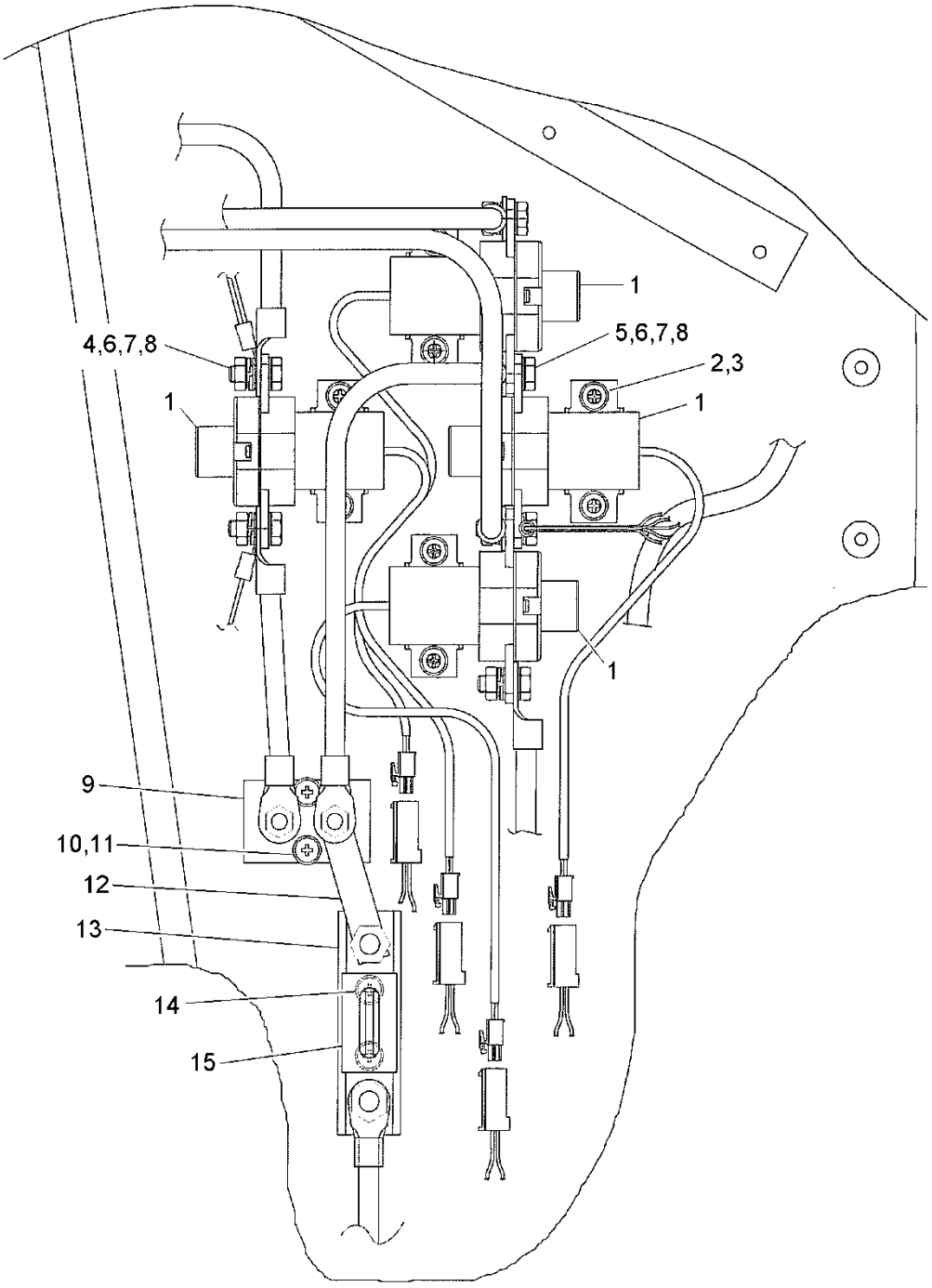

Sheet 1 of 2
S/N 5132 through 5133

FIGURE 10-17. ELECTRICAL COMPONENT INSTALLATION
(RIGHT SIDE BACKWALL)

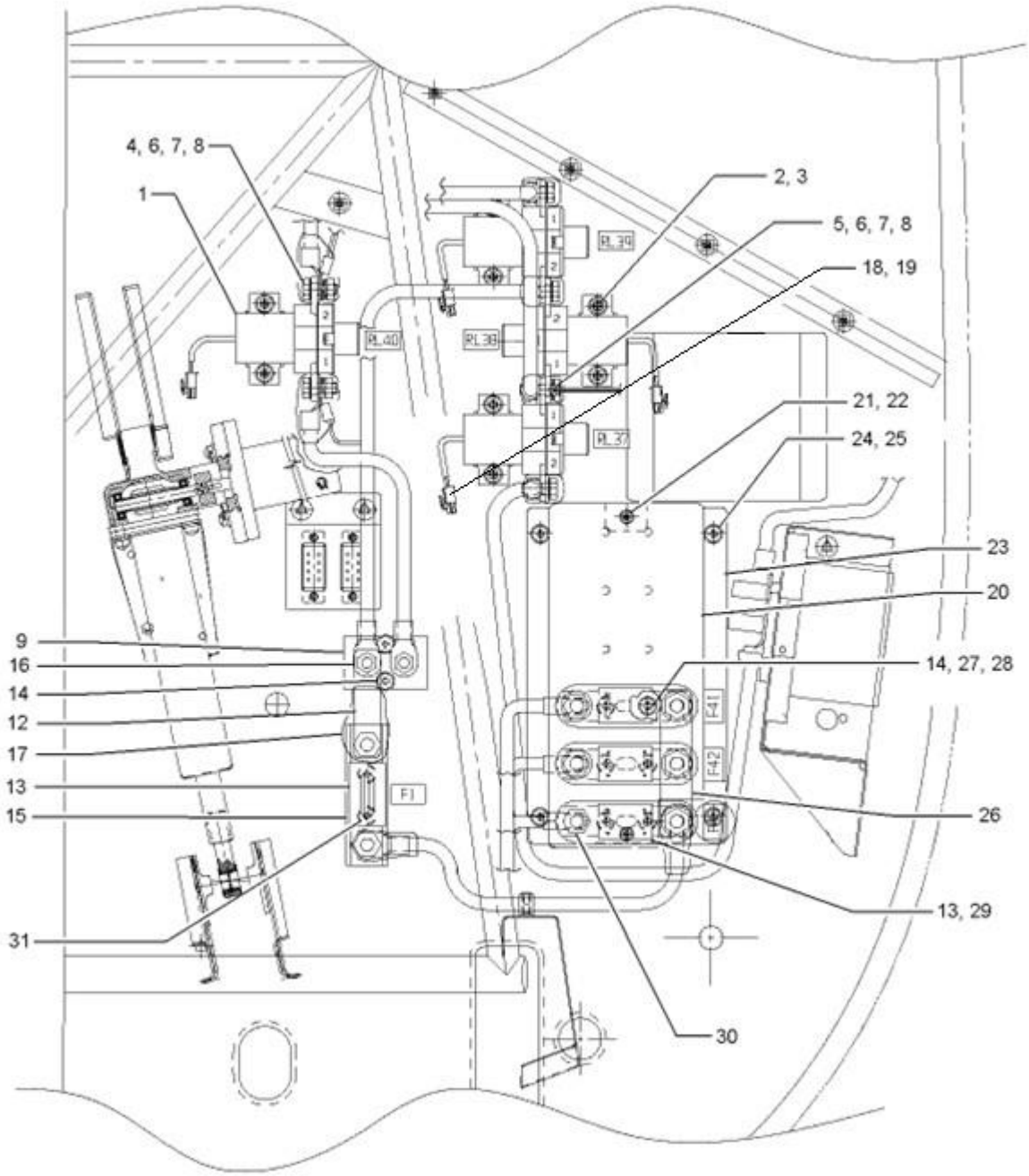

Sheet 2 of 2
S/N 5134 and subsequent

FIGURE 10-17. ELECTRICAL COMPONENT INSTALLATION
(RIGHT SIDE BACKWALL)

FIGURE 10-17. ELECTRICAL COMPONENT INSTALLATION
(RIGHT SIDE BACKWALL)

ITEM NUMBER	PART NUMBER	DESCRIPTION	QTY PER ASSY	EFFECTIVITY		
				TH-28	480	480B
1	6-1616945-7	. Relay	4		X	X
2	MS27039-1-08	. Screw	8		X	X
3	AN960-10	. Washer	8		X	X
4	AN4C5A	. Bolt	4		X	X
5	AN4C6A	. Bolt	2		X	X
6	AN960C416L	. Washer	12		X	X
7	MS35338-139	. Lock Washer	6		X	X
8	AN315C4R	. Nut	6		X	X
9	22-370-150	. Shunt	1		X	X
9*	22-370-200	. Shunt	1		X	X
10	MS27039-1-11	. Screw	2		X	X
11	AN960-10L	. Washer	2		X	X
12	4199042-11	. Bus	1		X	X
12*	4199042-13	. Bus	1		X	X
13**	4164	. Fuse Block	3		X	X
14**	AN507-1032R14	. Screw	8		X	X
15≡	ANL-100	. Low Voltage Limiter	1		X	X
15* ≡	ANL-150	. Low Voltage Limiter	1		X	X
16	AN960C416L	. Washer	1		X	X
17	MS21571-2S	. Nipple	2		X	X
18†	172233-1	. Socket Housing	4		X	X
18	1-72165-9	. Housing (Superseded by 172233-1)	4		X	X
19†	170364-1	. Pin	8		X	X
19	170363-1	. Pin (Superseded by 170364-1)	8		X	X
20●	4114039-15	. Cover, Hat Channels	1		X	X
20	4114039-11	. Cover (Superseded by 4114039-15)	1		X	X
21	8x1/2	. Screw	2		X	X
22	AN960-8L	. Washer	2		X	X
23	4114037-1	. Hat Channel Assembly	1		X	X
24	MS27039-1-07	. Screw	4		X	X
25	AN960-10L	. Washer	4		X	X
26	4199042-27	. Bus	1		X	X
27	AN364-1032A	. Nut	6		X	X
28	AN960D10L	. Washer	6		X	X
29≡	ANL-35	. Low Voltage Limiter	3		X	X
30	AN960C516L	. Washer	8		X	X
31≡	MS24693-S275	. Screw	2		X	X

*	Effectivity S/N 5134 and subsequent.
**	4164 quantity 1 and AN507-1032R14 quantity 2 for S/N 5133 and earlier.
≡	See Appendix A for equivalent part information.
•	Effectivity 480B S/N 5171 and subsequent. Retrofittable to 480 S/N 5001 to 5041 and 480B S/N 5042 and subsequent.
†	Effective 480B S/N 5192 and subsequent. Retrofittable to 480 S/N 5001 – 5041 and 480B S/N 5042 and subsequent.

FIGURE 10-23. LOW ROTOR WARNING AND MICRO SWITCH INSTALLATION

ITEM NUMBER	PART NUMBER	DESCRIPTION	QTY PER ASSY	EFFECTIVITY		
				TH-28	480	480B
1**	726607	. Speed Amplifier	1	X	X	X
2**	58390	. Socket	1	X	X	X
3**	AN515-8R14	. Screw	3	X	X	X
4	4196556-13	. Switch Bracket	1	X	X	X
5	MS35207-263	. Screw	2	X	X	X
6	AN960D10	. Washer	2	X	X	X
7*	1SE1	. Switch, Miniature	2	X	X	X
8*	JE-1	. Actuator	2	X	X	X
9	AN936A2	. . Lock Washer	1	X	X	X
10	AN340-2	. . Nut	1	X	X	X
11	MS35206-321	. Screw	2	X	X	X
12†	4199072-13	. Actuator Contactor	3		X	X
12	28-19048-11	. Block Cam (Superseded by	2	X	X	X
13	QS200-M24S	. Clamp (Used with 28-19048-11)	1	X	X	X

* Change quantity to 3 for 480B S/N 5046 and subsequent (Low Rotor, Engine Out, Hour Meter).

** Effectivity: 480 and 480B, S/N 5135, 5133 and earlier.

† Effectivity 480B S/N 5157 and subsequent. Retrofittable to 480 S/N 5001 – 5041 and 480B S/N 5042 and subsequent.

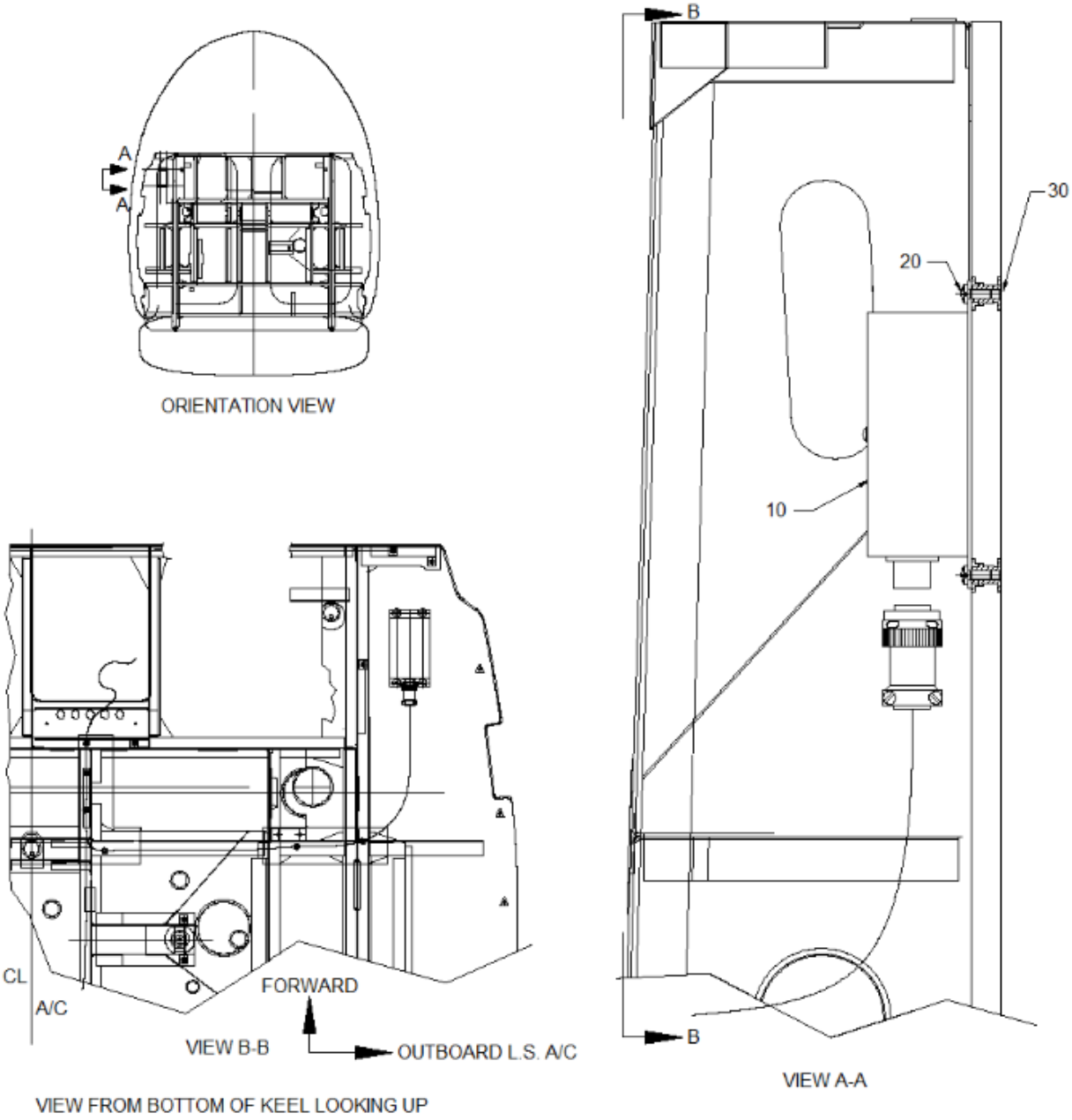

FIGURE 10-23.1. HI/LO ROTOR RPM SWITCH INSTALLATION

FIGURE 10-23.1. HI/LO ROTOR RPM SWITCH INSTALLATION

ITEM NUMBER	PART NUMBER	DESCRIPTION	QTY PER ASSY	EFFECTIVITY		
				TH-28	480	480B
–*	4230070-1	Kit – Hi/Lo Rotor RPM Switch Installation	REF			X
10	ECD4079-1	. RPM Switch	1			X
20	MS27039-0806	. Screw	4			X
30	NAS1833-08-500	. Insert	4			X
–	EA9394	. Potting Adhesive	A/R			X
–	CBR1M-M	. Cable Tie	15			X
–	CBR2M-M	. Cable Tie	15			X
–	4230070-3	Plug Assembly	REF			X
–	MS3126F12-10S	. Plug	1			X
–	MS3187A20	. Wire Hole Filler	4			X
–	D-436-37	. Splice	2			X
–	BPSPT-094-175W	. Wire Marker	12			X
–	AS-N-345	. Splice	6			X
–	M22759/16-22-9	. Wire	170”			X

* Effectivity 480B S/N 5187 and subsequent. Eligibility 480 S/N 5001 through 5041 and 480B S/N 5042 and subsequent.

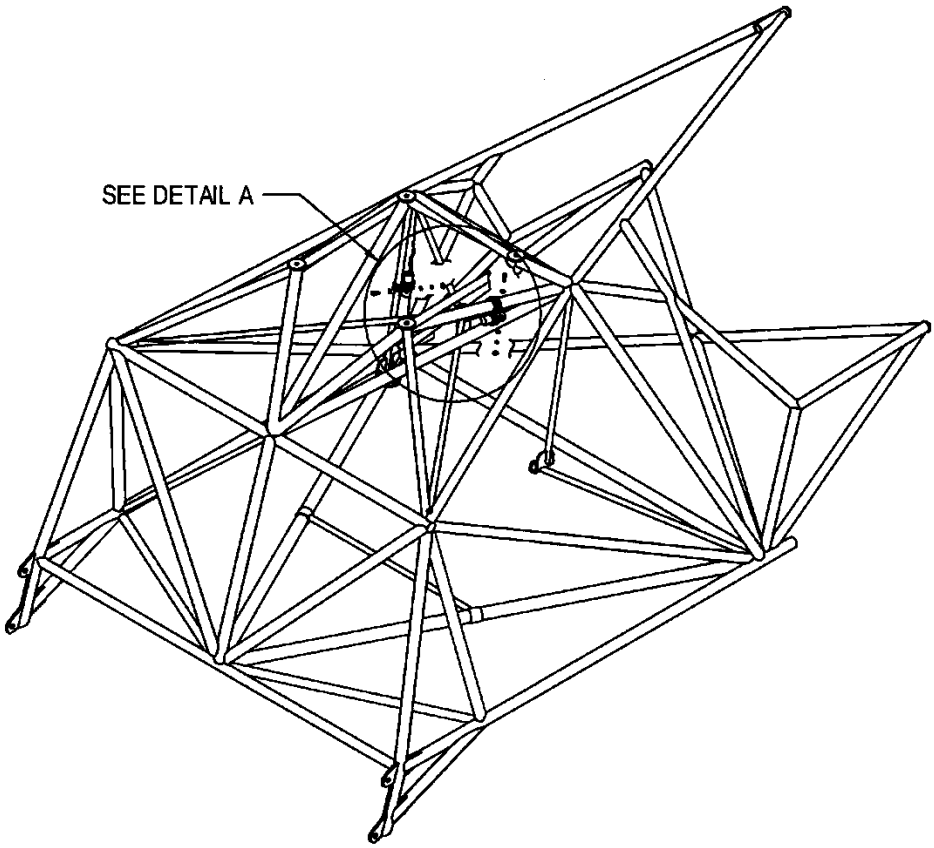

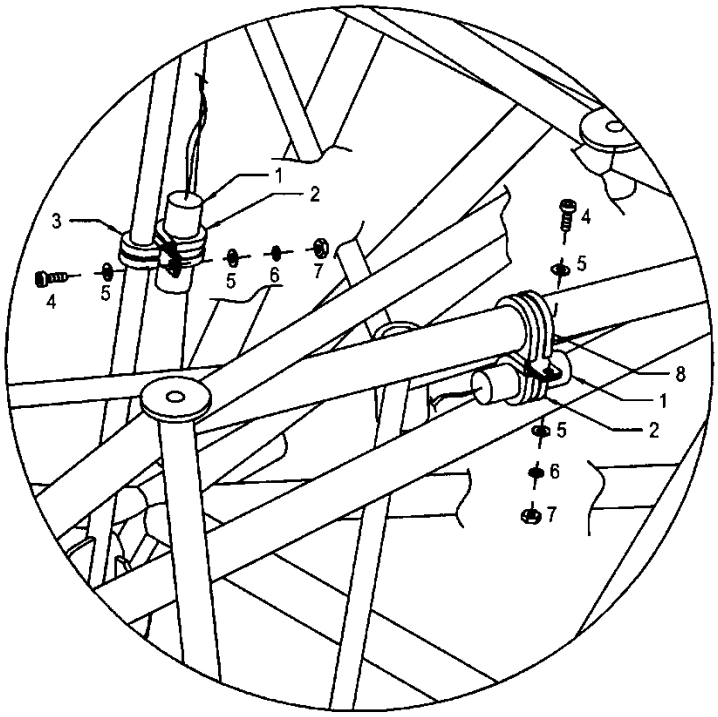

DETAIL A

TH-28 Only
Sheet 1 of 2

FIGURE 10-24. TH-28 CHIP DETECTOR PROGRAM CONTINUITY SENSOR INSTALLATION

FIGURE 10-32. LED POSITION/ANTI-COLLISION LIGHT ASSEMBLY

ITEM NUMBER	PART NUMBER	DESCRIPTION	QTY PER ASSY	EFFECTIVITY		
				TH-28	480	480B
1*	38-0250901-00	. . Gasket	1	X	X	X
2*	68-3950903A30	. . Lens, Clear Tail Position Light	1	X	X	X
3*	38-0230021-01	. . Gasket	1	X	X	X
4*	68-3950902A30	. . Lens, Clear Forward Position Light	1	X	X	X
5*	38-0130878-01	. . Gasket	1	X	X	X
6*	36-0050626-01	. . Flash Tube Assembly	1	X	X	X
7*	68-2290005-34	. . Lens, Clear/Coated	1	X	X	X
8*	19-170049-010	. . Retainer	1	X	X	X
9*	14-0050508-27	. . Screw	2	X	X	X
10*	01-0790340-03	. LED Green Forward Position Light, LED Clear Tail Position Light, and Strobe Anti-Collision Light Assembly	1	X	X	X
11*	01-0790340-04	. LED Red Forward Position Light, LED Clear Tail Position Light, and Strobe Anti-Collision Light Assembly	1	X	X	X

* Obtain parts from Whelen Engineering Company, Inc.

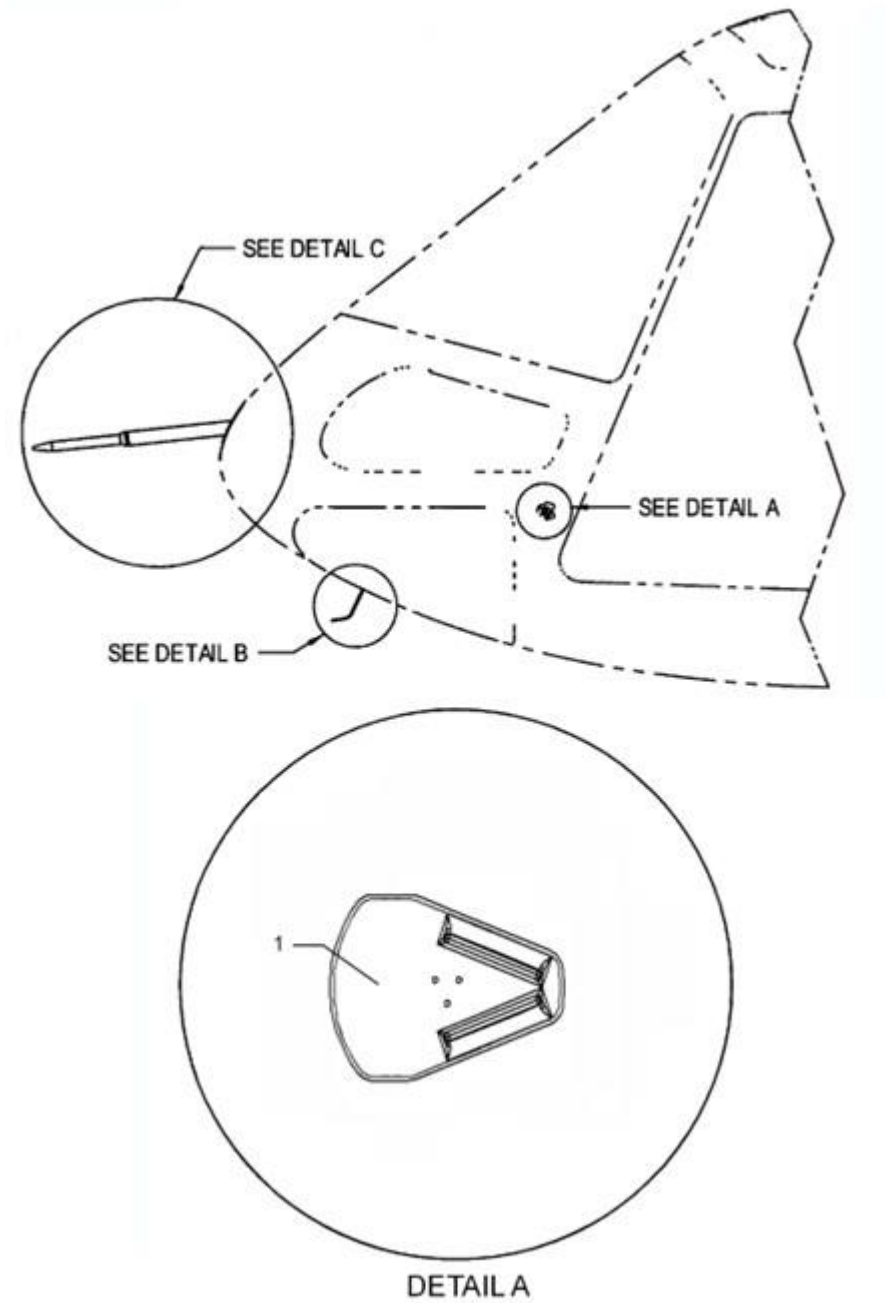

Sheet 1 of 2

FIGURE 10-33. STATIC PORT AND PITOT TUBE INSTALLATION

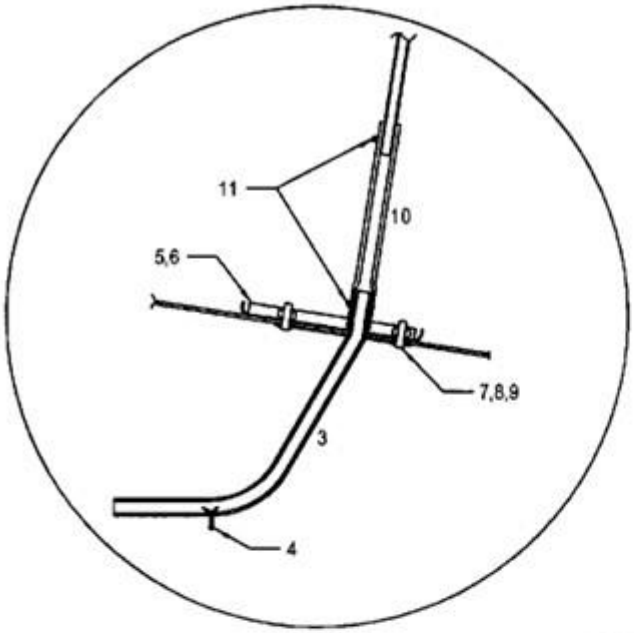

DETAIL B

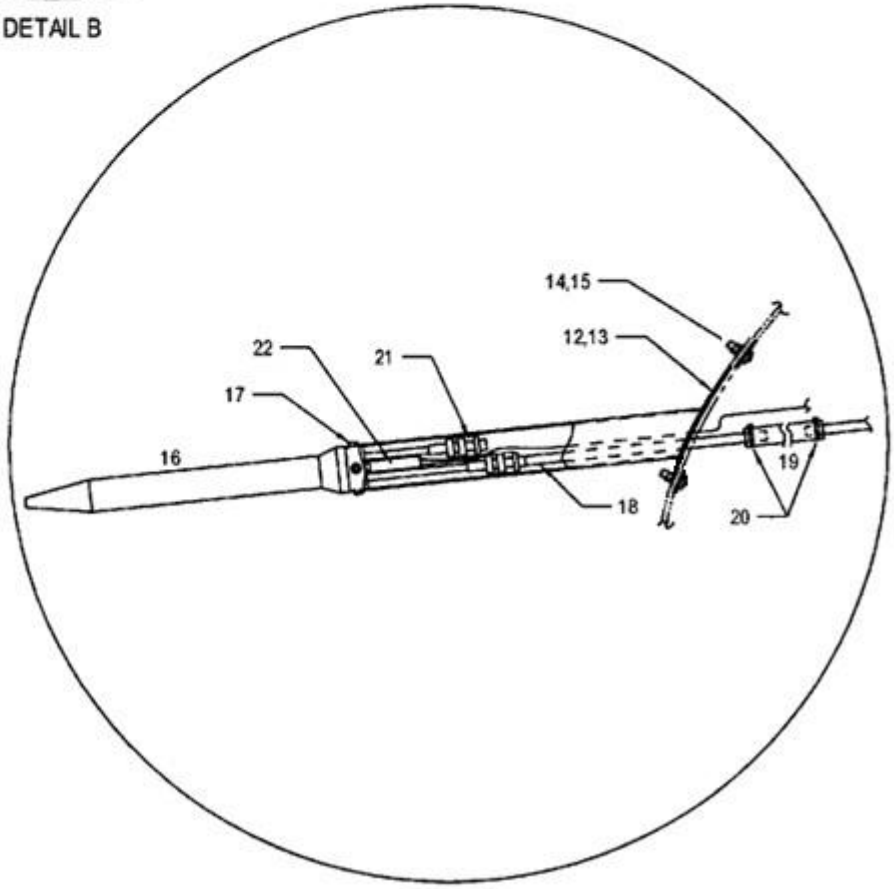

DETAIL C

Sheet 2 of 2

FIGURE 10-33. STATIC PORT AND PITOT TUBE INSTALLATION

FIGURE 10-33. STATIC PORT AND PITOT TUBE INSTALLATION

ITEM NUMBER	PART NUMBER	DESCRIPTION	QTY PER ASSY	EFFECTIVITY		
				TH-28	480	480B
–	4199003-103	Static Air/Pitot Tube Installation	REF	X	X	X
1†	4182310-21	. Static Port	2		X	X
–†	Weld-On 45	. . Structural Adhesive (Use with 4182310-21)	1		X	X
3	4199041-1	. Pitot Tube Assembly	1	X	X	X
4●	MS24665-151	. . Cotter Pin	1	X	X	X
4	AN381-3-8	. . Cotter Pin (Replaced by MS24665-151)	1	X	X	X
5	4199041-13	. Shim	1	X	X	X
6	4199082-11	. Stiffener	1	X	X	X
6	28-11121-7	. Stiffener (Replaced by 4199082-11)	1	X	X	X
7	AN525-832R8	. Screw	4	X	X	X
8†	NAS1149DN816H	. Washer	4	X	X	X
8†	AN960D8L	. Washer (Alternate)	4	X	X	X
8	AN960-8	. Washer (Replaced by AN960D8L)	4	X	X	X
9	MS21083N08	. Nut	4	X	X	X
9	AN364-832A	. Nut (Superseded by MS21083N08)	4	X	X	X
10	28-11121-4	. Tubing	1	X	X	X
11†	SST2S-MP	. Cable Tie	2	X	X	X
11	SST1.5I-MP	. Cable Tie (Replaced by SST2S-MP)	2	X	X	X
12*†	4196536-5	. Sleeve Weldment (Supersedes 4196536-1)	1	X	X	X
12*	4196536-1	. Sleeve Assembly (Superseded)	1	X	X	X
13*†	732-RTV	. Sealant: Rubber, Clear Silicone	1	X	X	X
13*†	4508-1	. Foam Tape (No longer used)	A/R	X	X	X
14*±	MS5198-26	. Screw	4	X	X	X
14*	MS27039-1-09	. Screw (Replaced by MS5198-26)	4	X	X	X
–	NAS1149D0363H	. Washer	4	X	X	X
–	NAS1149D0363H	. Washer	A/R	X	X	X
–	NAS1149D0316H	. Washer	A/R	X	X	X
15*●	S10P175	. PlusNut	4	X	X	X
–●	MS35333-41	. Lock Washer	4	X	X	X
–●	MS35333-40	. Lock Washer (Replaced by MS35333-41)	4	X	X	X
16*▲	AN5816-2	. Pitot: Heated 28 Volts	1	X	X	X
17*●	MS51958-26	. Screw	4	X	X	X
17*	MS35207-225	. Screw (Replaced by MS51958-26)	4	X	X	X
–*	MS35338-136	. Lock Washer	4	X	X	X
18*†	4196536-25	. Tube, Heated Pitot	1	X	X	X

FIGURE 10-33. STATIC PORT AND PITOT TUBE INSTALLATION

ITEM NUMBER	PART NUMBER	DESCRIPTION	QTY PER ASSY	EFFECTIVITY		
				TH-28	480	480B
18*	4199003-101	. Pitot Line Assembly (Superseded by 4196536-25)	1	X	X	X
–*	4199003-11	. . Isolator, Rubber	1	X	X	X
–*	AN818-4D	. . Nut	1	X	X	X
–*	MS20819-4D	. . Sleeve	1	X	X	X
19*	28-11121-4	. Hose	1	X	X	X
20*†	SST2S-MP	. Cable Tie	2	X	X	X
20*	SST1.5I-MP	. Cable Tie (Replaced by SST2S-MP)	2	X	X	X
21*†	AN929-4D	. Cap (Now a part of Pitot Tube AN5816-2)	1	X	X	X
22*	AN3115-1	. Connector	1	X	X	X
–*	7270-1-7 1/2	. Circuit Breaker 7 1/2 Amp, Toggle	1	X	X	X

* Optional heated pitot tube installation.

± Effectivity 480B S/N 5092 and subsequent.

• Effectivity 480B S/N 5127 and subsequent.

† Effectivity 480B S/N 5147 and subsequent. Eligibility 480 S/N 5001 – 5041 and 480B S/N 5042 and subsequent.

▲ PST300-A is can acceptable alternate.

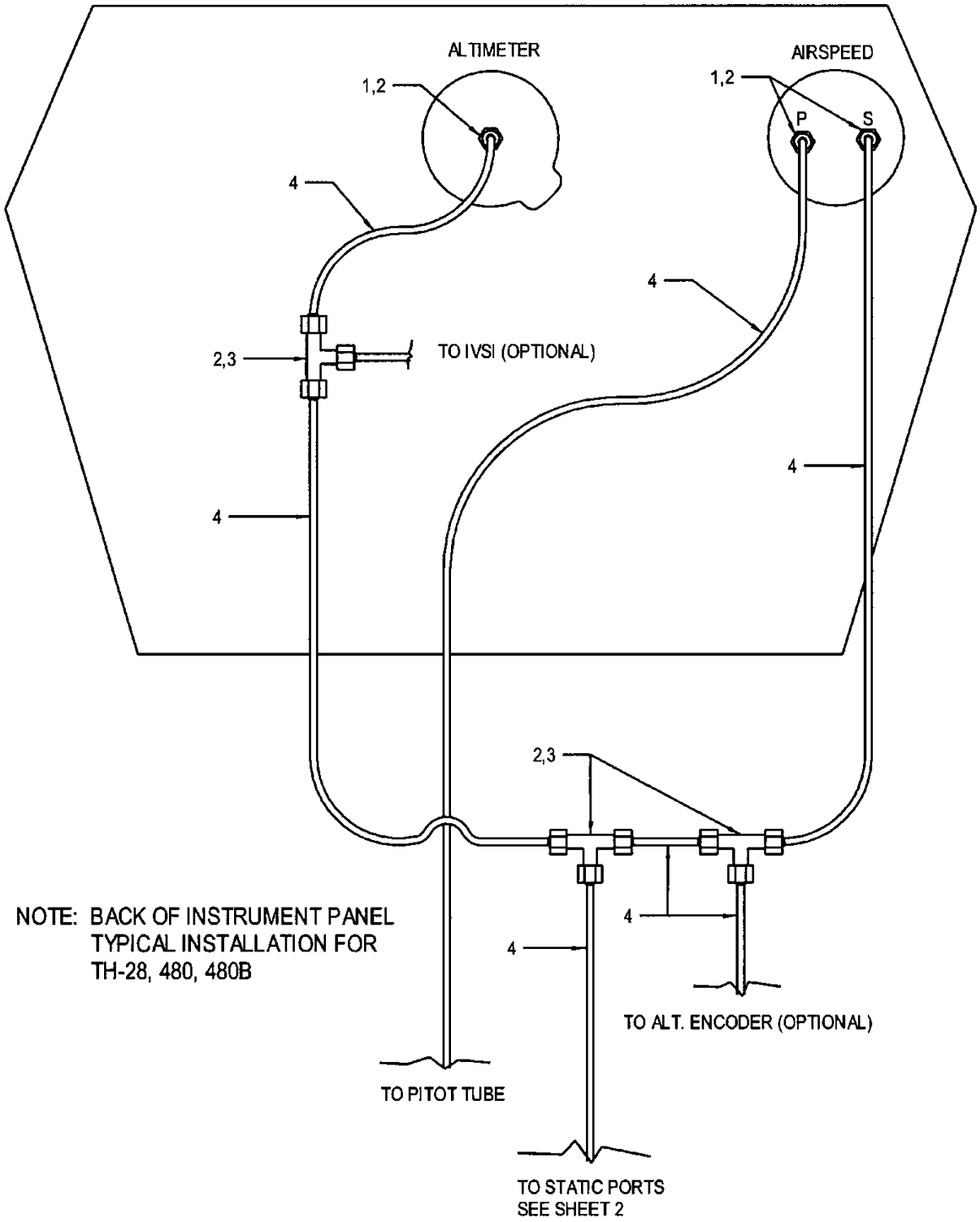

Sheet 1 of 2

FIGURE 10-34. STATIC AND PITOT LINE INSTALLATION

FIGURE 11-1. BLEED AIR HEATER AND DEFROSTER INSTALLATION

ITEM NUMBER	PART NUMBER	DESCRIPTION	QTY PER ASSY	EFFECTIVITY		
				TH-28	480	480B
1	S-9213EC-2	. Hose Assembly	1		X	X
2	4129554-1	. Line Assembly	1		X	X
3	S-9230EC-1	. Drain Valve	1		X	X
4‡	ES49026-8	. Fitting	1		X	X
4	8-8MTX-SS	. Tee (Superseded by ES49026-8) (Non – Preferred Alternate)	1		X	X
5	MS51521B8S	. Swivel Nut Elbow	1		X	X
6†	4129553-1	. Line Assembly	1		X	X
7	AN824-8J	. Tee	1		X	X
8†	4129556-1	. Line Assembly	1		X	X
9	4129555-1	. Line Assembly	1		X	X
10	AN824-8D	. Tee	1		X	X
11	E9002-1	. Defroster Assembly (L/H)	1		X	X
12	E9002-2	. Defroster Assembly (R/H)	1		X	X
13†	4129552-1	. Line Assembly	1		X	X
14	4129559-1	. Heater Manifold Assembly (See Figure 11-3 for breakdown)	1		X	X
15	MS21919WF12	. Clamp	5		X	X
16	MS21919WF16	. Clamp	2		X	X
17	MS35206-245	. Screw	9		X	X
17	AN515-8R8	. Screw (Superseded by MS35206-245)	9		X	X
18	NAS1149FN816P	. Washer	18		X	X
18	AN960-8L	. Washer (Alternate)	18		X	X
19	MS21083N08	. Nut	9		X	X
19	AN364-832A	. Nut (Superseded by MS21083N08)	9		X	X
20	4129551-11	. Support	3		X	X
21	4129550-11	. Support	1		X	X
22	MS21919WF8	. Clamp	4		X	X
23	AN525-8R7	. Screw	10		X	X
24	S8P-150	. PlusNut	14		X	X
25*	MS35333-40	. Lock Washer	10		X	X
25*	AN936A416	. Lock Washer (Alternate)	10		X	X
26	4129558-11	. Fire Sleeve	2		X	X
27	1053	. Stop Nut	2		X	X
28	MS21919WF4	. Clamp	2		X	X
29	AN3-8A	. Bolt	1		X	X
30	NAS1149F0332P	. Washer	2		X	X
30	AN960-10L	. Washer (Alternate)	2		X	X
31‡	MS21042-3	. Nut	1		X	X

FIGURE 11-1. BLEED AIR HEATER AND DEFROSTER INSTALLATION

ITEM NUMBER	PART NUMBER	DESCRIPTION	QTY PER ASSY	EFFECTIVITY		
				TH-28	480	480B
31	AN364-1032A	. Nut (Superseded by MS21042-3)	1		X	X
32	AN3-3A	. Bolt	1		X	X
33	4129560-1	. Heat Cable Assembly	1		X	X
34	4129501-901	. Heater Valve Assembly (See Figure 11-2 for breakdown)	1		X	X
35	4129560-3	. Defog Cable Assembly	1		X	X
36	4129501-902	. Defroster Valve Assembly (See Figure 11-2 for breakdown)	1		X	X
37	MS35206-244	. Screw	6		X	X
37	AN515-8R7	. Screw (Superseded by MS35206-244)	6		X	X
38	NAS1149FN832P	. Washer	6		X	X
38	AN960-8	. Washer (Alternate)	6		X	X
39	MS21083N08	. Nut	6		X	X
39	AN364-832A	. Nut (Superseded by MS21083N08)	6		X	X
40	4119894-15	. Plate (Engraved) - Heat	1		X	X
41	4119894-19	. Plate (Engraved) - Defr	1		X	X
42	MS35206-243	. Screw	6		X	X
42	AN515-8R6	. Screw (Superseded by MS35206-243)	6		X	X
43	4129562-3	. Eyeball, Heater Outlet	2		X	X
44	4129561-11	. Cover, Heater Outlet	2		X	X
45	4129563-11	. Spacer	8		X	X
46	MS24694-S13	. Screw	4		X	X
46	AN509-8R16	. Screw (Superseded by MS24694-S13)	4		X	X
47	AN525-832R16	. Screw	4		X	X
48**	4196518-19	. Bracket	1		X	X

* Lock washer installed between PlusNut and cabin structure.

** Used on helicopters with G1000H installation or if standard cooling fan is not installed.

† Use -3 line assemblies if ship is installed with G1000H.

‡ Effectivity 480B S/N 5157 and subsequent. Retrofittable to 480 S/N 5001 – 5041 and 480B S/N 5042 and subsequent.

FIGURE 11-2. HEATER AND DEFROSTER VALVE ASSEMBLIES

ITEM NUMBER	PART NUMBER	DESCRIPTION	QTY PER ASSY	EFFECTIVITY		
				TH-28	480	480B
–	4129501-901	. Heater Valve Assembly	1		X	X
1	4129541-1	. . Bracket Assembly	1		X	X
2	AN743-13	. . . Support Clamp Bracket	1		X	X
3**	MS20470AD4-4	. . . Rivet	2		X	X
3	MS20470AD4-3	. . . Rivet (Superseded by MS20470AD4-4)	2		X	X
4	4120027-1	. . Valve Assembly	1		X	X
5†	AN936-A516	. . . Lock Washer (No longer used)	1		X	X
6†	AN316-5R	. . . Nut (No longer used)	1		X	X
7	AN816-8J	. . Union	1		X	X
8	AN816-8D	. . Union	1		X	X
9‡	4129540-15	. . Arm	1		X	X
9**	4129540-13	. . Arm (Superseded by 4129540-15)	1		X	X
9	4129540-11	. . Arm (Superseded by 4129540-13)	1		X	X
10**	90251A190	. . Screw, Set	1		X	X
10	MS35206-244	. . Screw (Replaced by 90251A190)	1		X	X
10	AN515-8R7	. . Screw (Superseded by MS35206-244)	1		X	X
11**	AN340-8	. . Nut (No longer used)	1		X	X
12*	4122015-23	. . Screw, Fuel Shutoff	1		X	X
12	4122015-21	. . Screw, Fuel Shutoff (Alternate to 4122015-23)	1		X	X
13**	NAS1149FN832P	. . Washer	2		X	X
13	AN960-8	. . Washer (Alternate)	2		X	X
14	AN654-832A	. . Nut	1		X	X
15	AN503-10-6	. . Screw, Machine	2		X	X
16**	NAS1149D0363H	. . Washer, Flat	2		X	X
16	AN960D10	. . Washer, Flat (Alternate)	2		X	X
–	MS20995C32	. . Safety Wire	A/R		X	X
–	4129501-902	. Defroster Valve Assembly	1		X	X
17	4129542-1	. . Bracket Assembly	1		X	X
18●	MS21080-3	. . . Nut Plate	1		X	X
18●	MS21080-08	. . . Nut Plate (Replaced by MS21080-3)	1		X	X
18	F22NA17A-02	. . . Nut Plate (Superseded by MS21080-08)	1		X	X
19●	NAS1097AD3-4	. . . Rivet	2		X	X
19	MS20426AD3-3	. . . Rivet (Superseded by NAS1097AD3-4)	2		X	X
20	4120027-1	. . Valve Assembly	1		X	X
21†	AN936-A516	. . . Lock Washer (No longer used)	1		X	X
22†	AN316-5R	. . . Nut (No longer used)	1		X	X
23	AN816-8J	. . Union	1		X	X

FIGURE 11-2. HEATER AND DEFROSTER VALVE ASSEMBLIES

ITEM NUMBER	PART NUMBER	DESCRIPTION	QTY PER ASSY	EFFECTIVITY		
				TH-28	480	480B
24	AN816-8D	. . Union	1		X	X
25‡	4129540-15	. . Arm	1		X	X
25**	4129540-13	. . Arm (Superseded by 4129540-15)	1		X	X
25	4129540-11	. . Arm (Superseded by 4129540-13)	1		X	X
26**	90251A190	. . Screw, Set	1		X	X
26	MS35206-244	. . Screw (Replaced by 90251A190)	1		X	X
26	AN515-8R7	. . Screw (Superseded by MS35206-244)	1		X	X
27**	AN340-8	. . Nut (No longer used)	1		X	X
28*	4122015-23	. . Screw, Fuel Shutoff	1		X	X
28	4122015-21	. . Screw, Fuel Shutoff (Alternate to 4122015 -23)	1		X	X
29**	NAS1149FN832P	. . Washer, Flat	2		X	X
29	AN960-8	. . Washer (Alternate)	2		X	X
30	AN654-832A	. . Nut	1		X	X
31**	NAS1149D0363H	. . Washer, Flat	2		X	X
31	AN960D10	. . Washer, Flat (Alternate)	2		X	X
32	AN503-10-6	. . Screw, Machine	2		X	X
–	MS20995C32	. . Safety Wire	A/R		X	X

* Effectivity 480B S/N 5136 and subsequent.

** Effectivity 480B S/N 5148 and subsequent.

† Replaced by a valve stem nut that is included with the valve from the manufacturer.

‡ Effectivity 480B S/N 5155 and subsequent. Retrofittable to 480 S/N 5001, 480B S/N 5042 and subsequent.

• Effectivity 480B S/N 5195 and subsequent. Retrofittable to 480 S/N 5001 – 5041, 480B S/N 5042 and subsequent.

FIGURE 11-3. HEATER MANIFOLD ASSEMBLY

ITEM NUMBER	PART NUMBER	DESCRIPTION	QTY PER ASSY	EFFECTIVITY		
				TH-28	480	480B
–	4129559-1	. Heater Manifold Assembly	1		X	X
1	S-6424EC-1	. . Heater Ejector Assembly	2		X	X
2	S-9704EC-1	. . Adapter Assembly	2		X	X
–	MS35333-40	. . Lock Washer	8		X	X
3 ≡	6X3/8	. . Screw	2		X	X
4	S8P150	. . PlusNut	8		X	X
5	4129557-13	. . Support	1		X	X
6	4129557-11	. . Support	1		X	X
7	AN824-8D	. . Tee	1		X	X
8*	4129543-3	. . Line Assembly	1		X	X
8	4129543-1	. . Line Assembly (Superseded by 4129543-3)	1		X	X

≡ See Appendix A for equivalent part information.

* Effectivity 480B S/N 5195 and subsequent. Retrofittable to 480 S/N 5001 – 5041, 480B S/N 5042 and subsequent.

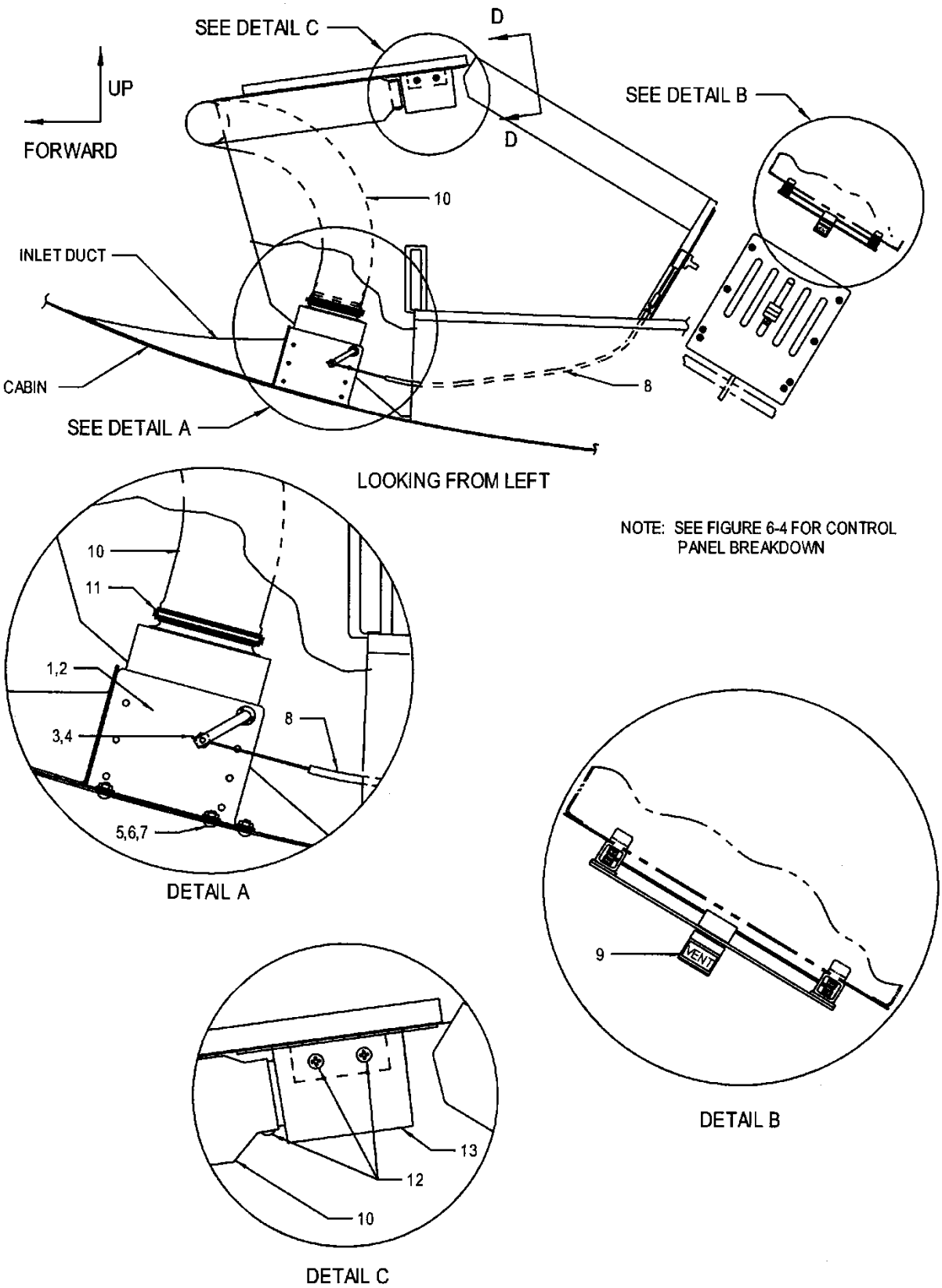

Sheet 1 of 2

FIGURE 11-4. FRESH AIR VENTILATION INSTALLATION

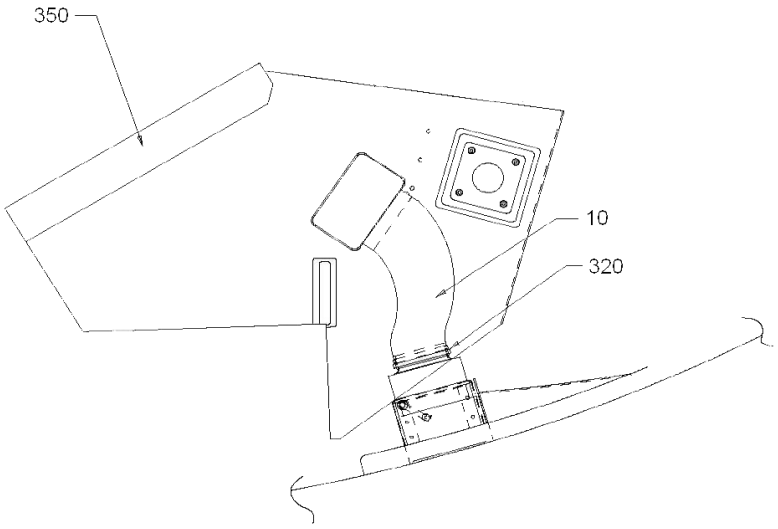

DETAIL B

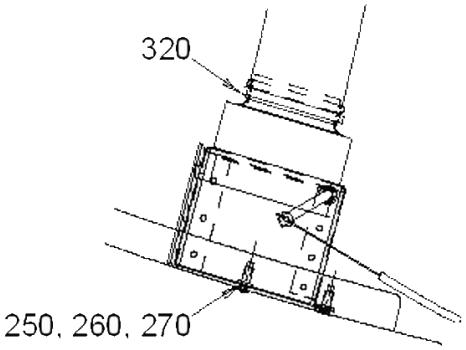

DETAIL C

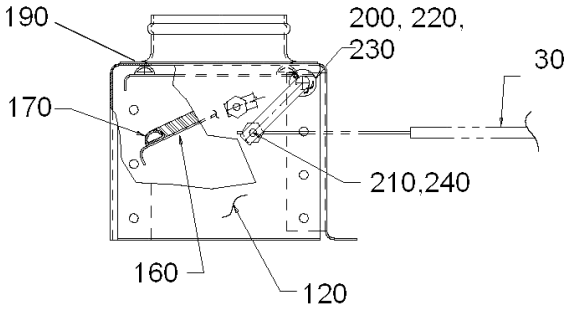

DETAIL C - LEFT SIDE

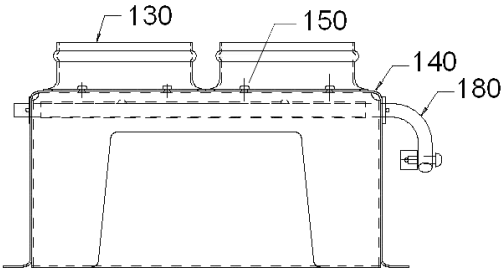

DETAIL C - ROTATED 90 DEGREES

Sheet 2 of 2

FIGURE 11-5. FRESH AIR VENTILATION INSTALLATION

FIGURE 11-5. FRESH AIR VENTILATION INSTALLATION

ITEM NUMBER	PART NUMBER	DESCRIPTION	QTY PER ASSY	EFFECTIVITY		
				TH-28	480	480B
–	4129548-3	Fresh Air Ventilation Installation	REF		X	X
–	4129548-5	Fresh Air Ventilation Installation	REF		X	X
10	4129548-15	. Duct (Right Side of Console)	1		X	X
20	4129548-17	. Duct (Left Side of Console)	1		X	X
–	6X3/8	. Screw	4		X	X
30	4129560-5	. Vent Cable Assembly	1		X	X
40	K1A-N	. Spring Plunger	1		X	X
50	4129533-11	. Upper Slide	1		X	X
60	4119894-17	. Vent Placard	1		X	X
70	4129533-13	. Lower Slide	1		X	X
–	4129533-15	. Shim	A/R		X	X
80	4182142-1	. Slider Control	1		X	X
–	4129534-11	. . Plate	1		X	X
90▼	94355A182	. Set Screw	1		X	X
90	1/8 x 832	. Set Screw (Replaced by 94355A182)	1		X	X
100	ECD093-11	. Stop Nut	1		X	X
110	MS24694-S7	. Screw	1		X	X
110	AN509-8R10	. Screw (Superseded by MS24694-S7)	1		X	X
120	4129530-1	. Ventilation Plenum Assembly (Used with 429548-1)	1		X	X
–120A	4129530-3	. Ventilation Plenum Assembly (Used with 4129548-5)	1		X	X
130	4129523-21	. . Adapter	2		X	X
140	732-RTV	. . Sealant	A/R		X	X
140	732BL	. . Sealant, Silicone (Replaced by 732-RTV)	1		X	X
150	MS20426A3-4	. . Rivet	8		X	X
150	MS20426AD3-4	. . Rivet (Replaced by MS20426A3-4)	8		X	X
160	4129522-17	. . Gate	1		X	X
170	X1333HT	. . Seal	20		X	X
180	4129522-13	. . Tube	1		X	X
190	MS51861-14	. . Screw	2		X	X
190	AN530-4-6	. . Screw (Superseded by MS51861-14)	2		X	X
200	MS24665-151	. . Cotter Pin	2		X	X
210	MS35206-230	. . Screw	1		X	X
210	AN515-6R8	. . Screw (Superseded by MS35206-230	1		X	X
220	NAS1149D0416H	. . Washer	A/R		X	X
220	AN960D416L	. . Washer (Alternate)	A/R		X	X
230	NAS1149D0463H	. . Washer	A/R		X	X
230	AN960D416	. . Washer (Alternate)	A/R		X	X

FIGURE 11-5. FRESH AIR VENTILATION INSTALLATION

ITEM NUMBER	PART NUMBER	DESCRIPTION	QTY PER ASSY	EFFECTIVITY		
				TH-28	480	480B
240	4129524-11	. . Nut	1		X	X
250	AN526-632R12	. . Screw	4		X	X
▌260	MS35333-40	. Washer	4		X	X
▌260	AN936-416	. Washer (Replaced by MS35333-40)	4		X	X
270	S6P150	. PlusNut	4		X	X
▌–	4508-1	. Foam Tape	A/R		X	X
▌280	NAS1149FN816P	. Washer	1		X	X
▌280	AN960-8L	. Washer (Alternate)	1		X	X
▌290	MS21083N08	. Nut	1		X	X
▌290	AN364-832A	. Nut (Superseded by MS21083N08)	1		X	X
300	AN525-832R8	. Screw	1		X	X
▌310	MS21919WDG4	. Clamp	1		X	X
320	PLT4S-CO	. Cable Tie	2		X	X
330*	4119890-5	. Console Shroud (Left Side)	1		X	X
340	10-796-00	. Louver	2		X	X
350	4119890-6	. Console Shroud (Right Side)	1		X	X

▌ ▼ 90251A190 set screw is an acceptable alternate.

* Refer to Figure 10-30.

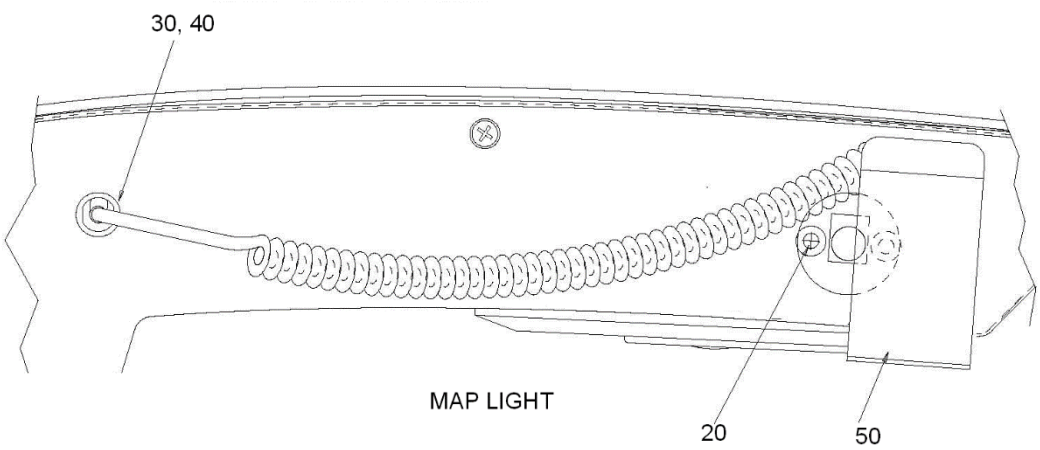

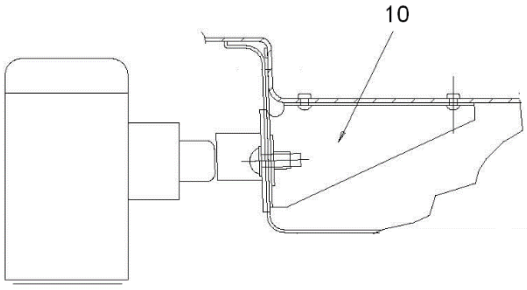

MAP LIGHT - ROTATED 90 DEGREES

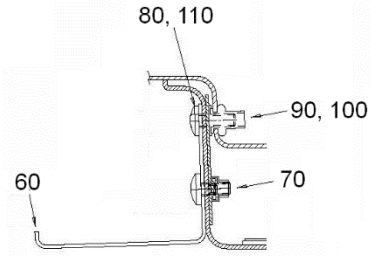

HEADPHONE OR HELMET HOOK

Sheet 1 of 2
480/480B S/N 5001 and subsequent

FIGURE 11-6. OVERHEAD CONSOLE VENT/LIGHT ASSEMBLY

APPENDIX B – HARDWARE SUBSTITUTIONS

Table of Contents	B-1
1 Introduction	B-2
2 Acceptable Substitution Conditions	B-2
3 Hardware Tables	B-2
Table A – Bolts	B-3
Table B – Screws	B-5
Table C – Nuts	B-6
Table D – Nut Plates	B-7
Table E – Solid Rivets	B-8
Table F – Blind Rivets	B-9
Table G – Washers	B-9
Table H – Rivnuts	B-10
Table I – Turnbuckles	B-11
Table J – Grommets	B-11
Table K – Cotter Pins	B-11
Table L – Clamps (Nylon)	B-12
Table M – Cable Ties	B-12
Table N – U-Channels (Rubber)	B-13
Table O – Shrink Tubing	B-13
Table P – Ring Tongue Terminals	B-14
Table Q – Retaining Rings	B-15
Table R – Cushioned Clamps	B-15
Table S – PlusNuts	B-15
Table T – Solder Sleeve Shield Terminators	B-15
Table U – Pipe Plugs (Countersink Hex Head)	B-15
Table V – Clip Nut	B-15
Table W – Plug and Bleeder – Screw Tread	B-15
Table X – Pin, Retaining, Safety	B-15
Table Y – Quarter Turn Fastener	B-15
Table Z – Quick Disconnect Terminal	B-15
Table AA – Plug (BNC, TNC, N)	B-15
Table AB – Roll Pin	B-15
Table AC – Sleeve, Coupling	B-15
Table AD – Clevis Pin	B-15
Table AE – Quarter (1/4) Turn Fastener Receptacle	B-16
Table AF – Sleeve, Flared Tube Fitting	B-16

1. Introduction

This specification establishes the conditions under which hardware may be substituted and lists the specific hardware which may be substituted. These standard substitutions apply only to components and assemblies which are designed by Enstrom and assembled in house. The tables which follow list the substitutions which are permissible. The hardware called out on the drawing is the preferred configuration. Each table contains a left-hand column which lists the basic or preferred hardware. The adjacent column to the right lists the alternate hardware. Alternate hardware may be used as a substitute for the hardware in the left column; however, hardware in the left column may NOT be substituted for hardware listed as alternate. In cases where hardware is interchangeable, 'Equivalent Substitution' will be stated in the right-hand column. In the case where there is no substitution, N/A (no alternate) will be stated in the right hand column.

2. Acceptable Substitution Conditions

Hardware may be substituted without further approval when all the following conditions apply:

- The preferred hardware is unavailable.
- There is an acceptable alternate listed in this report.
- All the other material conditions (hole diameter, material thickness, etc.) are within standard tolerances for the component.

To correct for component stack-up to ensure the nut is not screwed down against the last thread on the bolt and one to three threads showing past the nut, the grip length of the fastener may be substituted without further approval by the following methods:

- The length of rivets, screws, bolts, or quarter (1/4) turn fasteners may be increased or decreased one grip length (a "dash number").
- Washers may be added or subtracted or washer thicknesses may be substituted. Up to a total of three washers may be installed in combination under the head of the bolt and/or nut. (Washer substitutions must be in accordance with standard aircraft practices.)
    - Consult Engineering if it is necessary to remove all the washers or if there is a conflict with the washer requirements on the approved drawing.
- Consult Engineering if a specific hardware installation consistently requires adjustment in accordance with the conditions of this paragraph.

Substitutions may NOT be made in fastener diameter without engineering approval. Substitutions may NOT be made beyond one grip length or "dash number" without engineering approval.

3. Hardware Tables

Tables for substitute hardware are provided on the following pages. If the substitution is applicable to all dash numbers of a particular part number, it will be represented by a set of open parentheses. For example, AN3-( ) would indicate that the substitution includes all dash numbers for the AN3 bolt.

Table A – Bolts		
BOLT	**ALTERNATE**	
AN173-( )	N/A	
AN174-( )	N/A	
AN175-( )	N/A	
AN176-( )	N/A	
AN178-( )	N/A	
AN3	NAS6603	
-3A	-1	
-10	D10	
-10A	-10	
-11A	-12	
-12	D14	
-12A	-14	
-13	D16	
-13A	-16	
-14A	-18	
-15A	-20	
-16A	-22	
-17A	-24	
-20A	-26	
-21	D28	
-21A	-28	
-22	D30	
-22A	-30	
-23A	-32	
-24A	-34	
-26	D38	
-27A	-40	
-30A	-42	
-31A	-44	
-33A	-48	
-34A	-50	
-4	D2	
-4A	2	
-5	D4	
-5A	-4	
-6	D6	
-6A	-6	
-7	D8	
-7A	-8	
H3A	H1	
H4A	H2	
H5A	H4	
H6A	H6	
H10	DH10	
H13A	H16	
AN3	NAS6703	
C4A	-10	
C10A	D10	
AN4	NAS6604	
-3A	-1	
-4A	-1	
-5A	-3	
-6A	-5	
-7	D7	
-7A	-7	
-10A	-9	
-11	D11	
-11A	-11	
-12	D13	
-12A	-13	
-13	D15	
-13A	-15	
-14	D17	
-14A	-17	
-15	D19	
-15A	-19	
-16	D21	
-16A	-21	
-17	D23	
-17A	-23	
-20	D25	
-20A	-25	
-21A	-27	
-22A	-29	
-23	D31	
-23A	-31	
-25A	-36	
-26A	-38	
-27A	-40	
-30A	-42	
-31A	-44	
-33A	-48	
-34A	-50	
-35A	-52	
-36	D54	
-36A	-54	
-37	D56	
-37A	-56	
-42A	-62	
H3A	H1	
H4A	H1	
H5A	H3	
H6A	H5	
H7A	H7	
H10A	H9	
H12A	H13	

H13A	H15	
H14A	H17	
H15A	H19	
H16A	H21	
AN4	NAS6704	
C5A	-3	
AN42BC11A	N/A	
AN42BC14A	N/A	
AN5	NAS6605	
-4A	-1	
-6A	-5	
-7	D7	
-10	D9	
-11	D11	
-11A	-11	
-12	D13	
-13	D15	
-13A	-15	
-15	D19	
-15A	-19	
-16	D21	
-16A	-21	
-17A	-23	
-21A	-27	
-22	D29	
-22A	-29	
-33A	-48	
-35A	-52	
-37A	-56	
-44A	-65	
H4A	H1	
H5A	H3	
H6A	H5	
H7A	H7	
H10A	H9	
H46A	H69	
AN5	NAS6705	
C13A	-15	
AN6	NAS6606	
-6A	-3	
-7A	-5	
-10A	-7	
-11A	-9	
-20A	-23	
-22	D25	
-22A	-25	

-23A	-29	
-24A	-31	
-27A	-38	
-30A	-40	
-33	D46	
H6A	H3	
H34A	-48	
AN7	NAS6607	
-27A	-38	
H7A	-5	
AN73( )	MS20073-03-( )	
AN74( )	MS20073-04-( )	
AN75( )	MS20073-05-( )	
AN76( )	MS20073-06-( )	
AN73A( )[1]	MS20074-03-( )	Equivalent Substitution
AN74A( )[1]	MS20074-04-( )	
AN75A( )[1]	MS20074-05-( )	
AN76A( )[1]	MS20074-06-( )	
AN8	NAS6608	
-10A	-5	
LWB-22-6-58	N/A	
MS20006-( )	N/A	
MS20074-( )	N/A	
MS21250-( )	N/A	
MS24677-( )	N/A	
NAS144	MS20004	
DH10	H4	
DH12	H4	
NAS146	MS20006	
DH22	H12	
DH24	H14	
NAS1004-( )	N/A	
NAS1103-11	NAS6203-11	
NAS1104	NAS6204	
-9D	-9D	
-12	-12	
NAS1204-40D	N/A	
NAS1306	NAS6606	
-8	-8	
-48	-48	
NAS428-( )	N/A	
NAS6203-( )	NAS6603-( )	[2]
NAS6204-( )	N/A	

[1] Coarse thread

[2] Equivalent substitution if grip length, exposed thread length, and use of washers, if required, meet the requirements of Paragraph 2.

NAS6205-( )	N/A	
NAS6206-( )	N/A	
NK-6-6A	N/A	
NP5-6A	N/A	

Table B – Screws

SCREW	ALTERNATE	
AN502	NAS1101	
-10-8	-3-8	
-10-10	-3-10	
-10-12	-3-12	
-10-14	-3-14	
-10-18	-3-18	
AN503	NAS1101	
-8-4	-08-4	
-8-6	-08-6	
-8-8	-08-8	
-10-6	N/A	
-10-8	N/A	
-10-10	N/A	
-10-18	N/A	
-416-10	N/A	
-416-28	N/A	
AN505-4R6	MS35190-223	
AN505-4R7	MS35190-224	
AN507	MS24693	
-632-12	-S30	
-632R4	-S24	
-632R5	-S25	
-632R6	-S26	
-632R7	-S27	
-632R8	-S28	
-632R12	-S30	
-632R14	-S31	
-632R16	-S32	
-632R24	-S36	
-8-8	-S50	
-8R6	-S48	
-8R7	-S49	
-832-9	-S61	
-832R7	-S49	
-832R8	-S50	
-832R9	-S51	
-832R10	-S51	
-832R11	-S52	
-1032R6	-S270	
-1032R8	-S272	
-1032R10	-S273	
-1032R14	-S275	
-1032R44	-S287	
B632R6	-BB26	
B832R6	-B48	
B832R10	-B51	
C632R8	-C28	
C832-12	-C52	
C832R8	-C50	
C832R14	-C53	
C832R16	-C54	
C832R18	-C55	
C1024R14	-C75	
C1032-12	-C274	
AN509	MS24694	
-8R4	-S1	
-8R5	-S2	
-8R6	-S3	
-8R7	-S4	
-8R8	-S5	
-8R9	-S6	
-8R10	-S7	
-8R14	-S11	
-8R16	-S13	
-8R18	-S15	
-8R20	-S17	
-10R10	-S52	
-10R16	-S58	
-10R38	-S80	
-516R16	-S148	
AN510	MS35199	
B10R10	-56	
AN515	MS35206	
-2R4	-203	
-4-20	-222	
-4R8	-217	
-4R10	-218	
-4R12	-219	
-5R6	N/A	
-6-3	-225	
-6-6	-228	
-6-7	-229	
-6-24	-236	
-6R4	-226	
-6R5	-227	
-6R6	-228	
-6R7	-229	
-6R8	-230	
-6R11	-232	
-6R18	-328	
-8-7	-244	

-8-16	-249	
-8-24	-251	
-8R5	-242	
-8R6	-243	
-8R7	-244	
-8R8	-245	
-8R10	-246	
-8R12	-247	
-8R14	-248	
-8R16	-249	
-8R18	-332	
-8R20	-250	
-8R24	-251	
-8R32	-253	
-10R8	-263	
10R10	-264	
AN515	MS35214	
B6R6	-25	
B6R7	-26	
B6R8	-27	
B6R10	-28	
B6R12	-29	
B6R14	-30	
B6R16	-31	
B6R18	-109	
B8R8	-42	
B8R12	-44	
AN515	MS51957	
C6R12	-32	
C8R5	-42	
AN520-( )	MS35207-( )	
AN520B( )	MS35215-( )	
AN520C( )	MS51958-( )	
AN520DD( )	MS35219-( )	
AN520PB( )	MS35215-( )C	
AN525-( )	N/A	
AN526-( )	N/A	
AN530	MS51861	
-4-6	-14	Self-Tapping
-6-6	-24	
-6-8	-25	
-6R6	-24	
-6R8	-25	
-6R10	-26	
-8R6	-34	
-8R8	-35	
AN531	MS51862	
-6-6	-13	Self-Tapping
-6R6	-13	Self-Tapping
-6R8	-14	
-6R10	-15	
AN535-( )	MS21318-( )	
BN4CPK5	N/A	
MS16998-( )	N/A	
MS18063-8	25274N	
MS18066-( )	N/A	
MS24693-( )	N/A	
MS24694-( )	N/A	
MS27039-( )	N/A	
MS35206-( )	N/A	
MS35214-( )	N/A	
MS35265-( )	N/A	
MS51957-( )	N/A	
NP500-( )	NK500-( )	Equivalent Substitution
NP501-( )	NK501-( )	
NP509-( )	NK509-( )	
NP510-( )	NK510-( )	
NP525-( )	NK525-( )	
PK86XA( )	N/A	
PK89XA( )	N/A	
4122080-19	NAS1352-08H6	

Table C – Nuts

NUT	ALTERNATE	
AN310-5	MS17825-5	
AN315-( )	N/A	
AN316-( )	N/A	
AN320-( )	N/A	
AN335-420	MS51967-2	
AN340	MS35649	
-4	-242	
-8	-282	
-632	-262	
-832	-282	
B832	-286B	
AN341-516	MS35650-3315T	
AN345	MS35650	
-10	-302	
C416	-3254	
AN350-1032	MS35426-13	
AN363-524	MS21045L5	
AN364-( )	MS20364-( )	Equivalent Substitution
AN364-( )	MS21083	
-428A	N4	

-524A	N5	
-624A	N6	
-632A	N06	
-820A	N8	
-832A	N08	
-1018A	N10	
-1032A	N3	
-1216A	N12	
AN365-( )	MS21044	
-428A	N4	
-524A	N5	
-624A	N6	
-632A	N06	
-832A	N08	
-1032A	N3	
AN365-( )	MS20365-( )	Equivalent Substitution
AN818-( )	AN818-( )J	
AN924-( )D	AN924-( )W	
FN-22M-624	N/A	
F12NE-4717	MS17826	
-02	-3	
-048	-4	
-054	-5	
-064	-6	
-070	-7	
-080	-8	
F12NE-4753	MS17825	
-02	-3	
-048	-4	
-054	-5	
-064	-6	
-080	-8	
MS17826-( )	N/A	
MS20364-( )	MS21083N( )	
MS20365-( )	MS21044N( )	
MS20500-( )	N/A	
MS21042-( )	N/A	
MS21043-( )	N/A	
MS21044-( )	N/A	
MS51922-1	M45913/2-4CG5C	
NAS509-( )	N/A	
NAS679-( )	N/A	
22NKM( )	N/A	
37FL624	N/A	

Table D – Nut Plates

NUT PLATE	ALTERNATE	
A1784-6Z1D	NAS395-6	
A1785-6Z-1	NAS395-7	
A1787-8Z1D	NAS395-18	
A1789-8Z-1	NAS395-16	
A6162-8Z-1	NAS444-14	
A6191-8Z-1	NAS444-4	
A6194-8Z-1	NAS445-4	
A6195-6Z-1	NAS444-2	
A6195-8Z-1	NAS444-5	
A6196-8Z-1	NAS445-5	
F22LHA27M22-62	N/A	
F22NA1	MS21078	
-02	-3	Equivalent Substitution
-048	-4	
-62	-06	
-82	-08	
-82BC	-08K	
F22NA17A	MS21080	
-02	-3	Equivalent Substitution
-048	-4	
-62	-06	
-82	-08	
F22NA17	NAJ17	
-02BC	-02BC	[3]
-62	-62	
-62BC	-62BC	
-82	-82	
-82BC	-82BC	
MS21055L3	N/A	
MS21059L08K	MS21059L08	Nutplate attachment rivet use NAS1097AD3[4]
MS21069-08K	MS21069-08	
MS21073-( )	N/A	
MS21075L( )	NAS1068( )	Equivalent Substitution
MS21078	F22NA1	
-3	-02	Equivalent Substitution
-4	-048	
-06	-62	
-08	-82	
-08K	-82BC	
MS21078	MS21078	
-3K	-3	
-4K	-4	

[3] Equivalent Substitution is permissible when the NAJ( ) nut plate is unavailable.

[4] Minimum sheet thickness .025

-08K	-08	Nutplate attachment rivet use NAS1097AD3[1]
MS21078	NAJI	
-06 -06K -08 -08K -3 -3K	-62 -62BC -82 -82BC -02 -02BC	[5]
MS21080	MS21080	
-3K -4K -08K	-3 -4 -08	Nutplate attachment rivet use NAS1097AD3[6]
NAJ17-02BC	MS21080-3K	
NAJ38-82BC	NAS1024D08K	
NAJ5-048	NAS1027D4	
NAS1023-( )	MS21078-( )	Equivalent Substitution
NAS1023	NAJ1	
D06 D06K D08 D08K	-62 -62BC -82 82BC	[7]
NAS1023D08K	NAS1023D08	Nutplate attachment rivet use NAS1097AD3[1]
NAS1023D08K	MS21078-08K	
NAS1024D08K	NAS1024D08	Nutplate attachment rivet use NAS1097AD3[1]
NAS1025D06K	NAJ17-62BC	
NAS1025D08K	NAS1025D08	Nutplate attachment rivet use NAS1097AD3[1]
NAS1024D08K	NAS1024N08K	
NAS1024N08K	NAS1024A08K	
NAS1024N08K	MS21078-08	Use with NAS500WKD8 nut plate spacer.
NAS1025	NAJ17	
D3K D06 D06K D08 D08K	-02BC -62 -62BC -82 -82BC	[8]
NAS1026N08K	NAS1026A08K	
NAS1033N06	N/A	
NAS1474A3	N/A	
NAS686( )	MS21059( )	Equivalent Substitution
12LHTA1M-62	MS21069-06	Equivalent Substitution
12LHTA1M-62BC	MS21069-06K	
12LHTA17M-62	MS21071-06	
12LHTA17M-62BC	MS21071-06K	
22NA17A-02	F22NA17A	Equivalent Substitution
22NA17A-02	MS21080-3	[9]
22NA17A-82BC	F22NA17A	Equivalent Substitution
22NA17A-82BC	MS21080-08K	[10]
22NA21-22-02	N/A	
22NA21-22-048	N/A	
22NA27-22-02	F22NA27	Equivalent Substitution
22NA27-22-02	NAS1033N3	
22NA27-68-02	F22NA27	Equivalent Substitution
22NA27-68-02	NAS1033D3	[11]
22NA217-22-048	NAS1032P4	
52LHTA51-M82	MS21069-08	
52LHTA51M-82BC	MS21069-08K	
68NA1-02	NAS1023D3	
68NA1-048	F22NA1-048	
68NA1-62BC	NAS1023D06K	
68NA17A-82	NAS1025D08	
68-NA21-68-02	NAS686A3	

Table E – Solid Rivets

SOLID RIVET	ALTERNATE	
AN426A( )	MS20426A( )	Equivalent Substitution
AN426AD( )	MS20426AD( )	

[5] Equivalent Substitution is permissible when the NAJ( ) nut plate is unavailable.

[6] Minimum sheet thickness .025

[7] Equivalent Substitution is permissible when the NAJ( ) nut plate is unavailable.

[8] Equivalent Substitution is permissible when the NAJ( ) nut plate is unavailable.

[9] "F" prefix (Type II cadmium plate) is also an acceptable alternate to original finish (Type I cadmium plate).

[10] "F" prefix (Type II cadmium plate) is also an acceptable alternate to original finish (Type I cadmium plate).

[11] "F" prefix (Type II cadmium plate) is also an acceptable alternate to original finish (Type I cadmium plate).

AN427M4-7	MS20427M-7	Equivalent Substitution
AN470A( )	MS20470A( )	Equivalent Substitution
AN470AD( )	MS20470AD( )	
MS20427M-7	AN427M4-7	
MS20435M3-8	MS20615-3M8	
MS20615-( )	N/A	
NAS1097AD( )	N/A	Nutplate Rivet

Table F – Blind Rivets

BLIND RIVET	ALTERNATE	
CCR264SS	MS20605S	
-3-02	-3-W2	
-3-03	-3-W3	
-3-04	-3-W4	
-3-05	-3-W5	
CCR274SS( )	N/A	Nutplate Rivet
CR2163	NAS1398D	
-4-02	-4-2	
-4-04	-4-4	
CR2249	NAS1738B	
-5-02	-5-2	
-5-03	-5-3	
-5-06	-5-6	
-5-07	-5-7	
-5-08	-5-8	
CR3212	NAS9302B	
-4-02	-4-2	
-4-03	-4-3	
-4-04	-4-4	
-4-05	-4-5	
-5-02	-5-2	
-5-03	-5-3	
CR3213	NAS9301B	
-4-01	-4-1	
-4-02	-4-2	
-4-03	-4-3	
-4-04	-4-4	
-4-05	-4-5	
-4-06	-4-6	
-4-07	-4-7	
-4-09	-4-9	
-5-02	-5-2	
-5-03	-5-3	
-5-04	-5-4	
-6-02	-6-2	
-6-03	-6-3	
-6-04	-6-4	
-6-05	-6-5	
CR3243-( )	N/A	
CR3523-( )	N/A	
CR3552-( )	N/A	
CR9162-4-2	MS20601AD4W2	
CR9163	MS20600	
-4-01	AD4W4	
-4-02	AD4W2	
-4-03	AD4W3	
MS20426( )	CCR264SS( )	Nutplate Rivet
NAS1097( )	CCR244SS( )	Nutplate Rivet
NAS1398D5A2	RV1200-5-2	Equivalent Substitution
NAS1738( )	N/A	
RV1200-5-2	NAS1398D5A2	Equivalent Substitution
SD42BS[12]	CCP-42	
SD44BS[13]	CCP-44	

Table G – Washers

WASHER	ALTERNATE	
AN935	MS35338	
-4	-40	Equivalent Substitution
-6	-41	
-8	-42	
-8L	-42	
B8L	-99	
-10	-43	
-416	-44	
-416L	-44	
AN936	MS35333	
A6	-37	Equivalent Substitution
A8	-38	
A10	-39	
A416	-40	
A516	-41	
A616	-42	
A716	-43	
A816	-44	
A1216	-47	
-B4	-29	
AN940-13	MS27183-1	
AN960	NAS1149	

[12] Commercial Product: SD42BS equivalents include SB4-2, SS D42, SSP-42, SS42F, S/S 42D and 4-2SSD

[13] Commercial Product: SD44BS equivalents include SB4-4, SS D44, SSP-44, SS44F, S/S 44D and 4-SSD

-3L	FN316P	Equivalent Substitution
-4L	FN416P	
-6	FN632P	
-6L	FN616P	
-8	FN832P	
-8L	FN816P	
-10	F0363P	
-10L	F0332P	
-416	F0463P	
-416L	F0432P	
-516	F0563P	
-516L	F0532P	
-616	F0663P	
-616L	F0632P	
-716	F0763P	
-716L	F0732P	
-816	F0863P	
-916	F0963P	
-1216L	F1232P	
B6	BN632H	
B8	BN832H	
B416L	N/A	
C6	CN632R	
C10	C0363R	
C10L	C0332R	
C416	C0463R	
C416L	C0432R	
C516	C0563R	
C516L	C0532R	
C616L	C0632R	
C816	C0863R	
C1216	C1290R	
C1616	C1690R	
CD6L	N/A	
D3L	DN316H	
D10	D0363H	
D10L	D0316H	
D416	D0463H	
D416L	D0416H	
D516	D0563H	
D516L	D0516H	
D616	D0663H	
D616L	D0616H	
D6L	DN616H	Equivalent Substitution
D8	DN832H	
D8L	DN816H	
D9	DN949H	
KD10L	D0332K	
PD8L	DN816J	
PD10	D0363J	
PD10L	D0316J	
PD416	D0463J	
PD416L	D0416J	
AN960	NAS620	Equivalent Substitution
AN970-( )	N/A	
AN975-( )	N/A	
HARPER	BOKER'S	
3/16	C145712[14]	Equivalent Substitution
1/4	C102780[15]	
3/8	C102781[16]	
HARPER	ECD050	
3/16	-21[17]	Equivalent Substitution
1/4	-11[18]	
5/16	-19[19]	
3/8	-15[20]	
5/8	-17[21]	
BOKER'S	ECD050	
C102780	-11	Equivalent Substitution
C102781	-15	
C145712	-21	
C162187	-11	
C162188	-13	
C162189	-15	
C162190	-17	
C162191	-19	
C172152	-23	
C173300	-25	
MS20002-( )	N/A	
MS27183-1	AN940-13	
MS51859-15	N/A	
NAS1149	NAS620	Equivalent Substitution

Table H – Riv Nuts

RIV NUT	ALTERNATE	
A8K75	MS27130A13K	Equivalent Substitution

[14] 0.688" OD x 0.203" ID x 0.041", 304 Stainless Steel
[15] 0.69" OD x 0.265" ID x 0.048", 304 Stainless Steel
[16] 1.00" OD x 0.392" ID x 0.062", 316 Stainless Steel
[17] 0.688" OD x 0.203" ID x 0.041", 304 Stainless Steel
[18] 0.69" OD x 0.265" ID x 0.048", 304 Stainless Steel
[19] 0.875" OD x 0.337" ID x 0.062", 316 Stainless Steel
[20] 1.00" OD x 0.392" ID x 0.062", 316 Stainless Steel
[21] 0.625" OD x 0.260" ID x 0.062", 316 Stainless Steel

A10K	MS27130	
80	A25K	Equivalent Substitution
116	A99K	
130	A26K	
166	A100K	
216	A101K	
MS27130	A10K	
A25K	80	Equivalent Substitution
A99K	116	
A26K	130	
A100K	166	
A101K	216	
MS27130	NAS1329	
A13K	A8K75	Equivalent Substitution
A25K	A3K80	
A26K	AK130	
MS27130	NAS1330	
A99K	A3K116	Equivalent Substitution
A100K	A3K166	
A101K	A3K216	
NAS1329	MS27130	
A8K75	A13K	Equivalent Substitution
A3K80	A25K	
AK130	A26K	
NAS1330	MS27130	
A3K116	A99K	Equivalent Substitution
A3K166	A100K	
A3K216	A101K	

Table I – Turn Buckles

TURN BUCKLE	ALTERNATE	
MS21251-( )	N/A	
MS21256-( )	N/A	

Table J – Grommets

GROMMETS	ALTERNATE	
AN931	MS35489	
-2-9	-2	
-2-16	-3	
-3-5	-4	
-3-9	-134	
-3-10	-5	
-4-7	-6	
-4-12	-7	
-4-16	-8	
-5-9	-9	
-5-12	-10	
-5-13	-118	
-6-10	-11	
-6-16	-12	
-7-11	-13	
-8-13	-14	
-8-20	-15	
-9-13	-16	
-10-14	-17	
-10-20	-18	
-11-16	-19	
-12-17	-20	
-12-20	-135	
-12-23	-21	
-12-26	-120	
-14-20	-22	
-14-26	-121	
-16-22	-23	
-16-30	-24	
-20-38	-25	
-20-40	-26	
-24-28	-27	

Table K – Cotter Pins

COTTER PINS	ALTERNATE	
AN381	MS24665	
-1-6	N/A	
-1-8	-22	
-1-12	-24	
-1-16	-26	
-15-5	N/A	
-15-6	N/A	
-15-7	N/A	
-15-8	-58	
-15-10	N/A	
-15-12	-88	
-15-14	N/A	
-15-16	-90	
-15-20	-91	
-15-24	-92	
-15-28	-93	
-15-32	-94	
-2-5	N/A	
-2-6	N/A	
-2-7	-1013	
-2-8	-151	
-2-10	-152	
-2-12	-153	
-2-14	N/A	
-2-16	-155	
-2-20	-157	
-2-24	-159	

-2-28	-161	
-2-32	-162	
-25-8	-227	
-25-10	N/A	
-25-12	-229	
-25-14	N/A	
-25-16	-231	
-25-18	N/A	
-25-20	-233	
-25-22	N/A	
-25-24	-235	
-25-26	N/A	
-25-28	-237	
-25-32	-238	
-3-8	-298	
-3-10	N/A	
-3-12	-300	
-3-14	N/A	
-3-16	-302	
-3-18	N/A	
-3-20	-304	
-3-22	N/A	
-3-24	-306	
-3-26	N/A	
-3-28	-308	
-3-32	-309	
-4-8	-366	
-4-12	-368	
-4-14	N/A	
-4-16	-370	
-4-18	N/A	
-4-20	-372	
-4-22	N/A	
-4-24	374	
-4-26	N/A	
-4-28	-376	
-4-32	-377	
-4-36	-378	
-5-8	N/A	
-5-12	-436	
-5-16	-437	
-5-18	N/A	
-5-20	-439	
-5-22	N/A	
-5-24	-441	
-5-26	N/A	
-5-28	-443	
-5-32	-444	
-5-36	-445	
-5-40	-446	
-6-24	-513	
-6-26	N/A	
-6-28	-515	
-6-32	-516	
-6-36	-517	
-6-40	-518	
-6-48	-520	
-7-32	-580	
-7-36	-581	
-7-40	-582	
-8-32	-640	
-8-36	-641	
-8-40	-642	
-8-48	-643	
-8-56	-644	
-8-64	-645	
-10-32	-701	
-10-36	-702	
-10-40	-703	

Table L – Clamps (Nylon)

CLAMPS	ALTERNATE	
1/8-6NA	CCH12-S10	
1/4-6NA	CCH25-S10	
3/8-6NA	CCH38-S10	
1/2-6NA	CCH50-S10	
5/8-6NA	CCH62-S10	
3/4-6NA	CCH75-S10	
7/8-6NA	CCH87-S10	
1-6NA	CCH100-S10	
439-SS4-8-2-6	NAS1714C3-4NW	Equivalent Substitution

Table M – Cable Ties

CABLE TIE	ALTERNATE	
SST2S-( )[22]	CBR3S-M	Equivalent Substitution
SST1.5I-( )[1]	CBR3I-M or CBR1.5I-M	
SST1M-( )[1]	CBR1M-M or CBR2M-M	
ILT2S-M	CBR3S-M	
ILT1.5I-M	CBR3I-M CBR1.5I-M	
ILT1M-M	CBR1M-M or CBR2M-M	

[22] Suffix may either be -MP or -P.

Table N – U-Channel (Rubber)		
U-CHANNEL	**ALTERNATE**	
X-142	AX-142P	Equivalent Substitution
X-142[23]	GE52-C69 GEE36FR-C GEE62FR-C GEE36FR-CY GEE62FR-CY	Equivalent Substitution

Table O – Shrink Tubing		
SHRINK TUBING	**ALTERNATE**	
3028-3/32	FIT-221V-3/32	Equivalent Substitution
3028-1/8	FIT-221V-1/8	
3028-1/4	FIT-221V-1/4	
3028-3/8	FIT-221V-3/8	
FIT-221V-1/2	N/A	
FIT-221V-3/4	N/A	
FIT-221V-1	N/A	
FIT-221V-1 1/2	N/A	
FIT221V-3/16AL	N/A	

[23] Substitution to GE( ) or GEE( ) permitted only for interior non-aesthetic areas.

Table P – Ring Tongue Terminals

RING TONGUE TERMINAL	ALTERNATE[24], [25]	ALTERNATE	
AA	19073	MS25036	
-820-04	0007	-148	
-821-06	0011	-102	
-821-08	0013	-149	
-821-10	0017	-103	
-822-10	0022	-103	
-822-14	0024	-150	
-822-56	0027	-104	
-832-06	0038	-102	
BB	19073	MS20659/MS25036	
-523-04	N/A	MS25036-152	
-525-14	N/A	MS25036-154	
-537-04	N/A	MS20659-152	
-537-10	N/A	MS25036-108	
-818-38	0059	MS25036-110	
-825-14	0076	MS25036-154	
-825-56	0079	MS25036-109	
-837-06	0083	MS25036-107	
-837-08	0085	MS25036-153	
-837-10	0087	MS25036-108	
C	19073	MS25036	
-528-08	0110	-156	
-528-10	0113	-112	
-530-56	0123	-113	
-540-38	0139	-114	
-828-08	0165	-156	
-828-10	0170	-112	
-830-14	0188	-157	
-830-56	0200	-113	
-836-06	0216	-111	
-840-38	0236	-114	
D	19067	MS25036	
-750-14	0008	-116	
-751-56	0025	-117	
-756-06	0035	N/A	
-756-08	0037	N/A	
E	19193/19067	MS25036	
-360-14	191930248	-120	
-760-14	190670071	-120	
-760-56	N/A	-121	
-960-56	190670073	-121	
F	19193	MS20659	
-366-14	0261	-111	
-366-38	0264	-112	
-366-56	0267	-132	
-367-10	0273	-144	
-367-14	0275	-111	
-367-56	0278	-132	
G	19193	MS20659	
-375-14	0305	-113	
-375-38	0307	-114	
-375-56	0309	-147	
M	N/A	MS25036	
-8113-04	N/A	-144	
-8118-06	N/A	-145	
-8118-08	N/A	-146	

[24] ETC/Molex manufacturer nomenclature update.

[25] Additional dash no. (-) within the P/N or additional zero (0) P/N prefix may be purchased to accommodate manufacturer's database/catalog.

Table Q – Retaining Ring

RETAINING RING	ALTERNATE	
N5100-78-S-PP	ON78EXTSP (Meyer)	
N5002-268-PP	ON268INVSP	

Table R – Cushioned Clamps

CLAMP	ALTERNATE	
MS21919( )[26]	MS21919W( )	
MS21919DG( )	MS21919CJ( )	
MS21919WDG( )	MS21919WCJ( )	

Table S – Plusnut

PLUSNUT	ALTERNATE	
S8P-270	S8P270ZK	Equivalent Substitution

Table T – Solder Sleeve Shield Terminator

SOLDER SLEEVE SHIELD TERMINATOR	ALTERNATE	
ST63-2-00	M83519/1-2	
ST63-3-00	M83519/1-3	
ST63-4-00	M83519/1-4	
ST63-5-00	M83519/1-5	

Table U – Plug, Pipe – Countersink Hex Head

PLUG, PIPE	ALTERNATE	
AN932-( )	MS27769-( )	

Table V – Clip Nut

CLIP NUT	ALTERNATE	
RM52LHA4972802	13100000-5	

Table W – Plug and Bleeder – Screw Thread

PLUG AND BLEEDER	ALTERNATE	
AN814-2D	AS5169D02	
AN814-2DL	AS5169D02L	
AN814-3DL	AS5169D03L	
AN814-4DL	AS5169D04L	
AN814-5DL	AS5169D05L	
AN814-6DL	AS5169D06L	
AN814-8DL	AS5169D08L	

Table X – Pin, Retaining, Safety

PIN, RETAINING, SAFETY	ALTERNATE	
AN416-1	A-A-55488-1	
AN416-2	A-A-55488-2	

Table Y – Quarter Turn Fastener

QUARTER TURN FASTENER	ALTERNATE	
AW4-( )	AJW4-( )	Equivalent Substitution
AW4-( )	D4-AJW4-( )	

Table Z – Quick Disconnect Terminal

TERMINAL	ALTERNATE	
AA-2201	19003-0001	Equivalent Substitution
AA-2202	19003-0011	
AA-2204	19003-0024	
AA-8137	19019-0006	
BB-2206	19003-0040	
BB-8132	19019-0022	
C-2265	19005-0010	

Table AA – Plug (BNC, TNC, N)

PLUG	ALTERNATE	
225345-6	5-225345-6	Equivalent Substitution
225392-2	5225392-2	
225395-6	5225395-6	
225395-7	5225395-7	
225396-7	5225396-7	
225554-6	5225554-6	
225699-1	5225699-1	
225973-4	5225973-4	
UG-89A/U	031-5	
	31-5	
	UG-89/U	

Table AB – Roll Pin

ROLL PIN	ALTERNATE	
( )S-094-0625	MS16562-215	

Table AC – Sleeve, Coupling

SLEEVE, COUPLING	ALTERNATE	
AN819-( )	MS20819-( )	
MS20819-( )	MS20819-( )J	

Table AD – Clevis Pin

CLEVIS PIN	ALTERNATE	
AN393-( )	MS20392-2C( )	
AN394-( )	MS20392-3C( )	
AN395-( )	MS20392-4C( )	

[26] MS21919F series clamps not permitted for use or substitution.

Table AE – Quarter (1/4) Turn Fastener Receptacle		
QUARTER (1/4) TURN FASTENER RECEPTACLE	**ALTERNATE**	
S4-200	1219-4200-Z3Y	

Table AF – Sleeve, Flared Tube Fitting		
SLEEVE, FLARED TUBE FITTING	**ALTERNATE**	
AN819-( )	MS20819-( )	Equivalent Substitution
MS20819-( )	AS5176-( )	Equivalent Substitution