ENSTROM F-28/280 SERIES ILLUSTRATED PARTS CATALOG

RECORD OF REVISIONS

REV.	ISSUE DATE	DATE INSERTED	BY	REV.	ISSUE DATE	DATE INSERTED	BY
1	12/90		DJS				
2	4/28/00		DJS				
3	9/30/13	10/22/13	NMP				
4	3/24/17	3/24/17	JKW				
5	5/9/18	5/9/18	JKW				
6	4/22/19	4/22/19	AD				
7	8/21/19	8/21/19	AD				
8	2/27/23	2/27/23	AD				
9	5/17/23	5/17/23	AD				
10	11/8/23	11/8/23	AD				

Maintain this record in the front of the manual.

UNCONTROLLED COPY WHEN DOWNLOADED OR PRINTED

Visit www.enstromhelicopter.com for instructions to order an original manual and to register for email notification updates.

INTENTIONALLY LEFT BLANK

UNCONTROLLED COPY WHEN DOWNLOADED OR PRINTED

Visit www.enstromhelicopter.com for instructions to order an original manual and to register for email notification updates.

ENSTROM
HELICOPTER CORPORATION

ENSTROM F-28/280 SERIES

ILLUSTRATED PARTS CATALOG

1987 EDITION

MODEL EFFECTIVITY:
F-28A, 280, F-28C, 280C, F-28F, 280F, AND 280FX

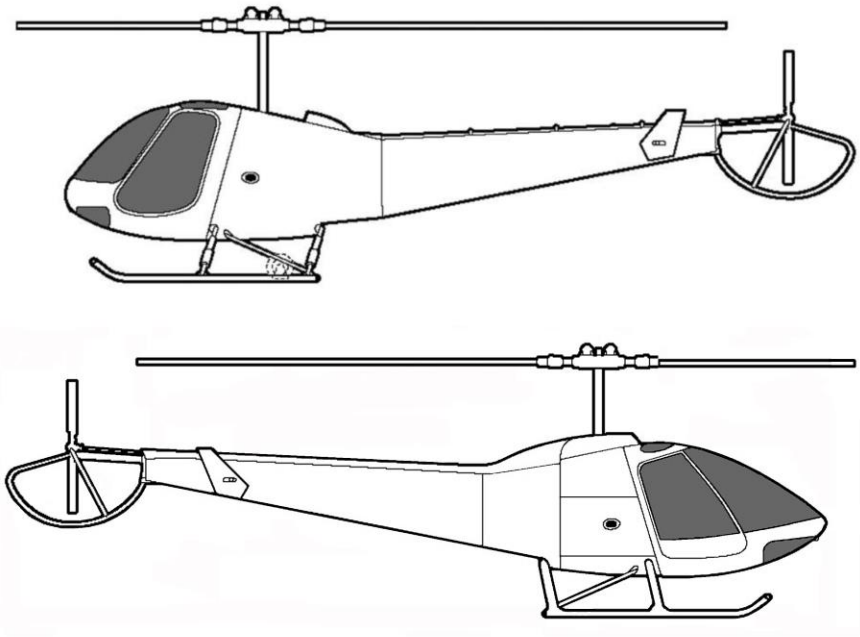

Download an electronic copy of this manual from the Technical Support page at www.enstromhelicopter.com.

Copyright 1987-2023
The Enstrom Helicopter Corporation
2209 22nd Street
Menominee, Michigan 49858-3515

Telephone: 906-863-1200
Fax: 906-863-6821

UNCONTROLLED COPY WHEN DOWNLOADED OR PRINTED

Visit www.enstromhelicopter.com for instructions to order an original manual and to register for email notification updates.

ENSTROM F-28/280 SERIES ILLUSTRATED PARTS CATALOG

RECOMMENDED CHANGE REPORT

This Illustrated Parts Catalog (IPC) is prepared and distributed by The Enstrom Helicopter Corporation and is intended for use by personnel responsible for maintaining Enstrom F28A, 280, F28C, 280C, F28F, 280F, and 280FX helicopters. This manual is periodically revised. If, in the opinion of the user, any information has been omitted or requires clarification, please direct your comments to Enstrom via this form (duplicate) or other similar form. Send the recommended changes to:

Technical Publications
The Enstrom Helicopter Corporation
2209 22nd Street
Menominee, MI 49858-3515

Manual Identification: Enstrom F-28/280 Series Illustrated Parts Catalog
Manual Date: 1987
Revision Number and Date: _____
Aircraft Model: _____

Recommended Change:

UNCONTROLLED COPY WHEN DOWNLOADED OR PRINTED

Visit www.enstromhelicopter.com for instructions to order an original manual and to register for email notification updates.

ENSTROM F-28/280 SERIES ILLUSTRATED PARTS CATALOG

TABLE OF CONTENTS

Figure	Description	Page
	Title Page	i
	Recommended Change Report	ii
	Table of Contents	iii
	Effective Page List	ix
	Part Number Index	xvii
SECTION 1 – INTRODUCTION		
	Scope	1-2
	Introductory Information	1-2
	Detailed Parts List	1-3
	Appendices	1-4
SECTION 2 – PARTS ORDERING INFORMATION		
	General	2-2
	Parts Orders	2-2
	Shipment	2-3
	Emergency Requirements	2-3
	Credit Terms	2-3
SECTION 3 – POWER PLANT		
	Cover Page	3-1
	Table of Contents	3-1
3-1	Air Induction System (F-28A)	3-2
3-2	Air Induction System	3-4
3-3	Turbocharger Induction System	3-8
3-4	Fuel Nozzle Air Vent System	3-13
3-5	Engine Vent Installation	3-16
3-5.1	Magneto Cooling Installation	3-18
3-6	Oil Cooler Installation (A Models)	3-21
3-7	Oil Cooler Installation (C, F Models)	3-24
3-8	Turbocharger Oil Lines	3-28
3-9	Oil Fill Tube Installation	3-31
3-10	Throttle and Mixture Control Installation (A, C Models)	3-34
3-11	Throttle Correlator Assembly (F Models)	3-40
3-12	Throttle Correlator Installation (F Models)	3-44
3-13	Dual Throttle Control Installation (F Models)	3-46
3-14	Throttle Cable Installation (F Models)	3-48
3-15	Mixture Cable Installation (F Models)	3-50
3-16	Fire Curtain Assembly (All Models)	3-53
3-17	Fire Curtain Installation (All Models)	3-55
3-18	Engine Fan Shroud Assembly (A Models)	3-59
3-19	Engine Fan Shroud Assembly (C Models)	3-63
3-20/A/B	Engine Fan Shroud Assembly (C, F Models)	3-66
3-21	Cooling Fan and Alternator Installation	3-96
3-22	Engine Fuel System (A Models)	3-98
3-23	Engine Fuel System (C, F Models)	3-103

UNCONTROLLED COPY WHEN DOWNLOADED OR PRINTED

Visit www.enstromhelicopter.com for instructions to order an original manual and to register for email notification updates.

TABLE OF CONTENTS

Figure	Description	Page
3-24	Main Fuel System	3-108
3-25	Fuel Level Sending Unit	3-115
3-26	Fuel Shutoff Valve Assembly	3-117
3-27	Exhaust System Installation (A Models)	3-120
3-28	Exhaust System Installation (C, F Models)	3-122
3-29	Turbocharger Mount Installation	3-127
3-30	Engine Mount Assembly	3-130
3-31	Engine Components	3-132

SECTION 4 – MAIN ROTOR SYSTEM

	Cover Page	4-1
	Table of Contents	4-1
4-1	Main Rotor Hub Assembly	4-2
4-2	Main Rotor Blade and Retention Assembly	4-6
▌4-2.1	Retention Assembly (STC SR03465CH)	4-10.1
4-3	Flapping Pin and Damper Installation	4-11
4-4	Hydraulic Damper Assembly (28-14375-101)	4-13

SECTION 5 – BELT DRIVE ASSEMBLY

	Cover Page	5-1
	Table of Contents	5-1
5-1	Belt Tension Assembly and Installation	5-2
5-2	Spring Housing Assembly	5-7
5-3	Idler Pulley and Support Assembly	5-9
5-4	Jack Strut and Pulley Assembly	5-15
5-5	Main Drive Engagement Control System	5-21
5-6	Main Rotor Gearbox Installation	5-25
▌5-7	Main Rotor Transmission Seal Retainer Assembly	5-30

SECTION 6 – ELECTRICAL SYSTEM

	Cover Page	6-1
	Table of Contents	6-1
6-1	Electrical Components (F-28A, 280)	6-2
6-2	Electrical Panels	6-5
6-3	12 Volt Battery Over-Current Breaker Installation	6-9
6-4	Landing Light and Anti-Collision Light (F-28A)	6-11
6-5	Night Lighting Kit (280 Models)	6-18
6-6	Strobe And Position Light Installation (C, F Models)	6-22
6-7	Forward Landing Light Installation (F-28C, F-28F)	6-28
6-8	Forward Landing Light Installation (280 Series)	6-31
6-9	Battery Installation (F-28A, 280)	6-33
6-10	12 Volt Battery Installation (C, F, FX Models)	6-35
6-11	Annunciator Systems Installation	6-37
6-12	Fuse Panel (F-28F, 280FX)	6-41
6-13	24 Volt Battery Installation (All Models)	6-43
6-14	Trim Relay Installation 24 Volt (F-28F, 280FX)	6-48

UNCONTROLLED COPY WHEN DOWNLOADED OR PRINTED

Visit www.enstromhelicopter.com for instructions to order an original manual and to register for email notification updates.

ENSTROM F-28/280 SERIES ILLUSTRATED PARTS CATALOG

TABLE OF CONTENTS

Figure	Description	Page
	SECTION 7 – STRUCTURES	
	Cover Page	7-0
	Table of Contents	7-0
7-1	Windows, Doors and Compartment Enclosures (F-28A, F-28C)	7-1
7-1A	Door Hardware Details	7-2
7-1B	F-28F Cabin Door (F-28A, “C” and “F”)	7-3
7-2	Window Installation	7-9
7-2A	F-28F Cabin Door Assembly (F-28F, S/N 744 & Sub)	7-11
7-2B	Sections Through Door Latches & Lugs	7-12
7-2C	Section Through Door Hinge Assembly	7-13
7-2D	Section Details on Vent Windows	7-14
7-3	Cowling (F-28A, F-28C)	7-20
7-3A	Cowling (280, 280C)	7-23
7-4	Windows, Doors & Compartment Enclosure (280 - 280FX)	7-26
7-4A	280F Cabin Door (280 - 280FX)	7-28
7-4B	280 Cabin Door Lock Installation (280 - 280FX)	7-30
7-4C	280FX Cabin Doors Assembly/Installation	7-32.1
7-4D	280FX Cabin Closeout Installation	7-32.7
7-5	Engine Compartment Enclosures (F-28C - 280FX)	7-33
7-6	Three Piece Airscoop (280FX)	7-35
7-7	Cabin Asssembly Installation	7-37
7-8	Pylon Assembly to Tailcone	7-38
7-9	Tailcone Bulkhead and Skin Enclosures	7-40
7-10	Stabilizer and Tailcone Extension (F-28A, F-28C, F-28F)	7-42
7-11	Stabilizer and Tailcone Extension (280, 280C, 280F)	7-44
7-12	Stabilizer and Tailcone Extension (F-28F, 280FX)	7-46
7-12A	Tail Rotor Driveshaft Cover	7-48
7-13	Pylon Assembly to Landing Gear	7-50
7-14	Landing Gear Assembly	7-51
7-14A	Oleo Strut Assembly	7-54
7-14B	Landing Gear Fairings	7-56
	SECTION 8 – FLIGHT CONTROLS	
	Cover Page	8-1
	Table of Contents	8-1
8-1	Lower Swashplate Assembly	8-2
8-2	Lower Swashplate Installation	8-3
8-3	Lower Swashplate Control Rod Attachment	8-5
8-3A	Upper Swashplate Assembly & Control Attachment	8-6
8-4	Main Rotor Pitch Change Controls	8-7
8-5	Cyclic Control Assembly	8-8
8-5A	Cyclic Control Stick Assembly	8-18
8-6	Trim Spring Mechanical Installation	8-21
8-6A	Lateral and Longitudinal Bias Spring Installation	8-23
8-7	Lateral Trim With Bias Spring Installation	8-25
8-8	Trim Actuator Capsule Installation	8-27

UNCONTROLLED COPY WHEN DOWNLOADED OR PRINTED

Visit www.enstromhelicopter.com for instructions to order an original manual and to register for email notification updates.

TABLE OF CONTENTS

Figure	Description	Page
8-9	Lateral Trim Assembly	8-29
8-10	Longitudinal Trim Assembly	8-32
8-11	Collective Trim, Spring Capsule	8-35
8-12	Co-Pilots Collective Assembly	8-37
8-13	Pilots Collective Assembly	8-39
8-14	Collective Control System Torque Shaft Assembly	8-41
8-15	Collective Control System Torque Shaft Assembly	8-44
8-16	Collective Control Reversing Bellcrank	8-46
8-16A	Collective Control Push-Pull Rod Attachment	8-47
8-16B	Collective Reversing Bellcrank Pivot	8-48
8-17	Collective Stick Friction Control	8-50

SECTION 9 – FURNISHINGS

	Cover Page	9-1
	Table of Contents	9-1
9-1	Cabin Seat Assembly	9-2
9-2	Cabin Furnishings (Non-Production Models)	9-5
9-3	Cabin Furnishings and Fire Extinguisher	9-8
9-4	280F/FX Cabin Furnishings	9-13
9-5	Cabin Furnishings – Passenger Restraint System	9-18

SECTION 10 – UTILITY SYSTEMS

	Cover Page	10-1
	Table of Contents	10-1
10-1	Cabin Heating Installation (F-28A)	10-2
10-2	Cabin Heating Installation (280)	10-4
10-3	Cabin Heating Installation (F-28C, 280C)	10-7
10-4	Cabin Heating Installation (Current Production)	10-10

SECTION 11 – INSTRUMENTS

	Cover Page	11-1
	Table of Contents	11-1
11-1	Early F-28A Instrument Panels	11-2
11-2	F-28C Instrument Panel Installation	11-6
11-3	280C and 280F Instrument Panel Installation	11-10
11-4	280 Instrument Panel Installation	11-15
11-5	F-28F and 280FX Instrument Panel Installation (12V)	11-19
11-6	F-28F and 280FX Instrument Panel Installation (24V)	11-26
11-7	F-28F Instrument Panel Installation (24V) (F-28F S/N 833 and Subsequent)	11-31
11-8	280FX Instruments and Instrument Panel (280FX S/N 2166 and prior)	11-40
11-9	280FX Instruments and Instrument Panel (280FX S/N 2167 and Subsequent)	11-50
11-10	F-28A and 280 Instrument Line Pylon Location	11-58
11-11	Pitot Static System Installation	11-60
11-12	Instrument Lines Cabin and Panel	11-63

UNCONTROLLED COPY WHEN DOWNLOADED OR PRINTED

Visit www.enstromhelicopter.com for instructions to order an original manual and to register for email notification updates.

ENSTROM F-28/280 SERIES ILLUSTRATED PARTS CATALOG

TABLE OF CONTENTS

Figure	Description	Page
11-13	F-28A and 280 Instrument Lines Cabin and Panel	11-65
11-14	Instrument Line Installation	11-67
11-15	Instrument/System Line Installation	11-70
11-16	Turbine Inlet Temperature Indicator Installation	11-75
11-17	Graphic Engine Monitor	11-77
11-18	Mechanical Tachometer Drive Installation	11-80
11-19	EDM-700-4C Installation	11-83
11-20	Placard Bracket Installation	11-90
11-21	Placard Installation	11-94

SECTION 12 – TAIL ROTOR

	Cover Page	12-0
	Table of Contents	12-0
12-1A	Tail Rotor Transmission Assembly	12-0.2
12-1B	Flex Coupling Installation	12-1
12-2A	Tail Rotor Hanger Bearing Installation	12-3
12-2B	Rotor Tachometer Assembly	12-4
12-3	Tail Rotor Pedal Assembly	12-6
12-3A	Bellcrank Pivot Assembly	12-7
12-3B	Push Rod & Tie Rod Assembly	12-8
12-3C	Push Rod & Tie Rod Assembly	12-8
12-3D	Tie Rod & Cable Attachment	12-9
12-3E	Tie Rod & Cable Attachment	12-9
12-4	Tail Rotor Cables	12-12
12-5	Tail Rotor Pitch Link Assembly	12-14
12-6A	Tail Rotor Mechanical Controls(Right Hand Gearbox)	12-16
12-6B	Tail Rotor Mechanical Controls (Left Hand Gearbox)	12-18.2
12-7	28-15018-3 Tail Rotor Assembly (“A” Models)	12-19
12-8	28-150000-7,-10 Tail Rotor Assembly (“C” Models)	12-21
12-9	28-150050-2 Tail Rotor Assembly (“C” & “F” Models)	12-23
12-10	28-150079-1 Tail Rotor Assembly (“C” & “F” Models)	12-26

SECTION 13 – SHIMS

	Cover Page	13-1
	Table of Contents	13-1
13-1	Index of Enstrom Helicopter Shims	13-2

APPENDIX A – EQUIVALENT PARTS

	Introduction	A-3
	Equivalent Parts Tables	A-3

APPENDIX B – STANDARD HARDWARE SUBSTITUTIONS

	Cover Page	B-1
	Table of Contents	B-1
	Introduction	B-2

UNCONTROLLED COPY WHEN DOWNLOADED OR PRINTED

Visit www.enstromhelicopter.com for instructions to order an original manual and to register for email notification updates.

ENSTROM F-28/280 SERIES ILLUSTRATED PARTS CATALOG

TABLE OF CONTENTS

Figure	Description	Page
	Acceptable Subsitution Conditions	B-2
	Hardware Tables	B-2
	Table A – Bolts	B-3
	Table B – Screws	B-5
	Table C – Nuts	B-8
	Table D – Nut Plates	B-9
	Table E – Solid Rivets	B-11
	Table F – Blind Rivets	B-12
	Table G – Washers	B-13
	Table H – Rivnuts	B-15
	Table I – Turnbuckles	B-15
	Table J – Grommets	B-15
	Table K – Cotter Pins	B-16
	Table L – Clamps (Nylon)	B-17
	Table M – Cable Ties	B-17
	Table N – U-Channel (Rubber)	B-17
	Table O – Shrink Tubing	B-17
	Table P – Ring Tongue Terminals	B-18
	Table Q – Retaining Rings	B-18
	Table R – Cushioned Clamps	B-18
	Table S – Plusnuts	B-18
	Table T – Solder Sleeve Shield Terminator	B-19
	Table U – Plug, Pipe – Countersink Hex Head	B-19
	Table V – Clip Nut	B-19
	Table W – Plug and Bleeder – Screw Thread	B-19
	Table X – Pin, Retaining, Safety	B-19
	Table Y – Quarter Turn Fastener	B-19
	Table Z – Quick Disconnect Terminal	B-19
	Table AA – Plug (BNC, TNC, N)	B-19
	Table AB – Roll Pin	B-19
	Table AC – Sleeve, Coupling	B-19
	Table AD – Clevis Pin	B-20
	Table AE – Quarter (1/4) Turn Fastener Receptacle	B-20
	Table AF – Washers, Extended AN960 Listing	B-21

UNCONTROLLED COPY WHEN DOWNLOADED OR PRINTED

Visit www.enstromhelicopter.com for instructions to order an original manual and to register for email notification updates.

EFFECTIVE PAGE LIST

Figure	Description	Page
	i	Feb 27/23
	ii	Aug 21/19
	iii	Nov 8/23
	iv	Feb 27/23
	v	Nov 8/23
	vi	Nov 8/23
	vii	Nov 8/23
	viii	Nov 8/23
	ix	Nov 8/23
	x	Nov 8/23
	xi	Nov 8/23
	xii	Nov 8/23
	xiii	Nov 8/23
	xiv	Nov 8/23
	xv	Nov 8/23
	xvi	Nov 8/23
	xvii	Nov 8/23
	xviii	Nov 8/23
	xix	Nov 8/23
	xx	Nov 8/23
	xxi	Nov 8/23
	xxii	Nov 8/23
	xxiii	Nov 8/23
	xxiv	Nov 8/23
	xxv	Nov 8/23
	xxvi	Nov 8/23
	xxvii	Nov 8/23
	xxviii	Nov 8/23
	xxix	Nov 8/23
	xxx	Nov 8/23
	xxxi	Nov 8/23
	xxxii	Nov 8/23
	xxxiii	Nov 8/23
	xxxiv	Nov 8/23
	xxxv	Nov 8/23
	xxxvi	Nov 8/23
	xxxvii	Nov 8/23
	xxxviii	Nov 8/23
	xxxix	Nov 8/23
	xl	Nov 8/23
	xli	Nov 8/23
	xlii	Nov 8/23
	xliii	Nov 8/23
	xliv	Nov 8/23
	xlv	Nov 8/23
	xlvi	Nov 8/23
	xlvii	Nov 8/23
	xlviii	Nov 8/23
	xlix	Nov 8/23
	l	Nov 8/23
	li	Nov 8/23
	lii	Nov 8/23
	liii	Nov 8/23
	liv	Nov 8/23
	lv	Nov 8/23
	lvi	Nov 8/23
	lvii	Nov 8/23
	lviii	Nov 8/23
	lix	Nov 8/23
	lx	Nov 8/23
	lxi	Nov 8/23
	lxii	Nov 8/23
	lxiii	Nov 8/23
	lxiv	Nov 8/23
	lxv	Nov 8/23
	lxvi	Nov 8/23
	lxvii	Nov 8/23
	lxviii	Nov 8/23
	lxix	Nov 8/23
	lxx	Nov 8/23
	lxxi	Nov 8/23
	lxxii	Nov 8/23
	lxxiii	Nov 8/23
	lxxiv	Nov 8/23
	lxxv	Nov 8/23
	lxxvi	Nov 8/23
	lxxvii	Nov 8/23
	lxxviii	Nov 8/23
	lxxix	Nov 8/23
	lxxx	Nov 8/23
	lxxxi	Nov 8/23
	lxxxii	Nov 8/23
	lxxxiii	Nov 8/23
	lxxxiv	Nov 8/23
	lxxxv	Nov 8/23
	lxxxvi	Nov 8/23
	lxxxvii	Nov 8/23
	lxxxviii	Nov 8/23
	lxxxix	Nov 8/23
	xc	Nov 8/23
	xci	Nov 8/23
	xcii	Nov 8/23
	xciii	Nov 8/23
	xciv	Nov 8/23
	xcv	Nov 8/23
	xcvi	Nov 8/23
	1-1	Apr 22/19

UNCONTROLLED COPY WHEN DOWNLOADED OR PRINTED

Visit www.enstromhelicopter.com for instructions to order an original manual and to register for email notification updates.

ENSTROM F-28/280 SERIES ILLUSTRATED PARTS CATALOG

EFFECTIVE PAGE LIST

Figure	Description	Page
1-2		Feb 27/23
1-3		Apr 22/19
1-4		Apr 22/19
2-1		Apr 22/19
2-2		Apr 22/19
2-3		Apr 22/19
2-4		Apr 22/19
3-1		Aug 21/19
3-2		Apr 22/19
3-3		Apr 22/19
3-4		Apr 22/19
3-5		Apr 22/19
3-6		Apr 22/19
3-7		Feb 27/23
3-8		Feb 27/23
3-9		Apr 22/19
3-10		Feb 27/23
3-11		Apr 22/19
3-12		Apr 22/19
3-13		Feb 27/23
3-14		Feb 27/23
3-15		Feb 27/23
3-16		Apr 22/19
3-17		Apr 22/19
3-18		Apr 22/19
3-19		May 17/23
3-20		May 17/23
3-21		Apr 22/19
3-22		Apr 22/19
3-23		Apr 22/19
3-24		Apr 22/19
3-25		Apr 22/19
3-26		Apr 22/19
3-27		Apr 22/19
3-28		Apr 22/19
3-29		Feb 27/23
3-30		Feb 27/23
3-31		Apr 22/19
3-32		Apr 22/19
3-33		Apr 22/19
3-34		Apr 22/19
3-35		Apr 22/19
3-36		Apr 22/19
3-37		Apr 22/19
3-38		Apr 22/19
3-39		Apr 22/19
3-40		Apr 22/19
3-41		Nov 8/23
3-42		Nov 8/23
3-43		Nov 8/23
3-43.1		Nov 8/23
3-43.2		Nov 8/23
3-44		Apr 22/19
3-45		Apr 22/19
3-46		Apr 22/19
3-47		Apr 22/19
3-48		Apr 22/19
3-49		Apr 22/19
3-50		Apr 22/19
3-51		Apr 22/19
3-52		Apr 22/19
3-53		Apr 22/19
3-54		Apr 22/19
3-55		Apr 22/19
3-56		Apr 22/19
3-57		Apr 22/19
3-58		Apr 22/19
3-59		Apr 22/19
3-60		Apr 22/19
3-61		Apr 22/19
3-62		Apr 22/19
3-63		Apr 22/19
3-64		Apr 22/19
3-65		Apr 22/19
3-66		Apr 22/19
3-67		Apr 22/19
3-68		Feb 27/23
3-69		Apr 22/19
3-70		Feb 27/23
3-71		May 17/23
3-72		Feb 27/23
3-73		Feb 27/23
3-74		Feb 27/23
3-75		Feb 27/23
3-76		Feb 27/23
3-77		Feb 27/23
3-78		Feb 27/23
3-79		Apr 22/19
3-80		Apr 22/19
3-81		Feb 27/23
3-82		Feb 27/23
3-83		Feb 27/23
3-84		Feb 27/23
3-85		Feb 27/23
3-85.1		Feb 27/23
3-85.2		Feb 27/23
3-86		Feb 27/23
3-87		Apr 22/19

UNCONTROLLED COPY WHEN DOWNLOADED OR PRINTED

Visit www.enstromhelicopter.com for instructions to order an original manual and to register for email notification updates.

EFFECTIVE PAGE LIST

Figure	Description	Page		Page
3-88		Aug 21/19	4-1	Feb 27/23
3-89		Apr 22/19	4-2	Apr 22/19
3-90		Apr 22/19	4-3	Apr 22/19
3-91		Feb 27/23	4-4	Feb 27/23
3-92		Feb 27/23	4-5	Feb 27/23
3-93		Feb 27/23	4-6	Feb 27/23
3-94		Feb 27/23	4-7	Aug 21/19
3-95		Feb 27/23	4-8	Feb 27/23
3-95.1		Feb 27/23	4-9	Feb 27/23
3-95.2		Feb 27/23	4-10	Feb 27/23
3-96		Apr 22/19	4-10.1	Feb 27/23
3-97		Apr 22/19	4-10.2	Feb 27/23
3-98		Apr 22/19	4-11	Aug 21/19
3-99		Feb 27/23	4-12	Aug 21/19
3-100		Feb 27/23	4-13	Aug 21/19
3-101		Feb 27/23	4-14	May 17/23
3-102		Apr 22/19	4-15	Aug 21/19
3-103		Apr 22/19	4-16	Aug 21/19
3-104		Feb 27/23	5-1	Feb 27/23
3-105		Feb 27/23	5-2	Apr 22/19
3-106		Feb 27/23	5-3	Apr 22/19
3-107		Aug 21/19	5-4	Apr 22/19
3-108		Apr 22/19	5-5	Apr 22/19
3-109		Apr 22/19	5-6	Apr 22/19
3-110		Feb 27/23	5-7	Apr 22/19
3-111		Feb 27/23	5-8	Feb 27/23
3-112		Feb 27/23	5-9	Apr 22/19
3-113		Feb 27/23	5-10	Apr 22/19
3-114		Feb 27/23	5-11	Apr 22/19
3-115		Apr 22/19	5-12	Apr 22/19
3-116		Apr 22/19	5-13	Apr 22/19
3-117		Apr 22/19	5-14	Apr 22/19
3-118		May 17/23	5-15	Apr 22/19
3-119		May 17/23	5-16	Apr 22/19
3-120		Apr 22/19	5-17	Apr 22/19
3-121		Apr 22/19	5-18	Apr 22/19
3-122		Apr 22/19	5-19	Apr 22/19
3-123		Aug 21/19	5-20	Apr 22/19
3-124		Apr 22/19	5-21	Apr 22/19
3-125		Apr 22/19	5-22	Apr 22/19
▌ 3-126		Nov 8/23	5-23	Feb 27/23
3-127		Apr 22/19	5-24	Feb 27/23
3-128		Apr 22/19	5-25	Feb 27/23
3-129		Apr 22/19	5-25.1	Feb 27/23
3-130		Apr 22/19	5-25.2	Feb 27/23
3-131		Apr 22/19	5-26	Feb 27/23
3-132		Aug 21/19	5-27	Feb 27/23
3-133		Aug 21/19	5-28	Feb 27/23
3-134		Aug 21/19	5-29	Feb 27/23

UNCONTROLLED COPY WHEN DOWNLOADED OR PRINTED

Visit www.enstromhelicopter.com for instructions to order an original manual and to register for email notification updates.

EFFECTIVE PAGE LIST

Figure	Description	Page		Page
5-30		Feb 27/23	6-45	Apr 22/19
5-31		Feb 27/23	6-46	Apr 22/19
5-32		Feb 27/23	6-47	Apr 22/19
6-1		Apr 22/19	6-48	Apr 22/19
6-2		Apr 22/19	6-49	Apr 22/19
6-3		Apr 22/19	6-50	Apr 22/19
6-4		Apr 22/19	7-0	Feb 27/23
6-5		Apr 22/19	7-0.1	Feb 27/23
6-6		Apr 22/19	7-1	Original
6-7		Apr 22/19	7-2	Original
6-8		Apr 22/19	7-3	Original
6-9		Apr 22/19	7-3.1	Original
6-10		Apr 22/19	7-3.2	Original
6-11		Apr 22/19	7-4	Original
6-12		Apr 22/19	7-5	Original
6-13		Apr 22/19	7-6	Original
6-14		Apr 22/19	7-7	Original
6-15		Apr 22/19	7-8	Original
6-16		Apr 22/19	7-9	Original
6-17		Apr 22/19	7-10	Original
6-18		Feb 27/23	7-11	Original
6-19		Feb 27/23	7-12	Original
6-20		Apr 22/19	7-13	Original
6-21		Feb 27/23	7-14	Original
6-21.1		Feb 27/23	7-15	Original
6-21.2		Feb 27/23	7-16	Original
6-22		Apr 22/19	7-17	Original
6-23		Apr 22/19	7-18	Original
6-24		Apr 22/19	7-19	Original
6-25		Apr 22/19	7-20	Original
6-26		Apr 22/19	7-20.1	Original
6-27		Apr 22/19	7-20.2	Original
6-28		Apr 22/19	7-21	Original
6-29		Apr 22/19	7-22	Original
6-30		Apr 22/19	7-23	Original
6-31		Apr 22/19	7-24	Original
6-32		Feb 27/23	7-25	Original
6-33		Apr 22/19	7-26	Original
6-34		Apr 22/19	7-27	Original
6-35		Apr 22/19	7-28	Original
6-36		May 17/23	7-29	Original
6-37		Apr 22/19	7-30	Original
6-38		Apr 22/19	7-31	Original
6-39		Apr 22/19	7-32	Original
6-40		Apr 22/19	7-32.1	Feb 27/23
6-41		Apr 22/19	7-32.2	Feb 27/23
6-42		Apr 22/19	7-32.3	Feb 27/23
6-43		Apr 22/19	7-32.4	Feb 27/23
6-44		Apr 22/19	7-32.5	Feb 27/23

UNCONTROLLED COPY WHEN DOWNLOADED OR PRINTED

Visit www.enstromhelicopter.com for instructions to order an original manual and to register for email notification updates.

EFFECTIVE PAGE LIST

Figure	Description	Page
7-32.6		Feb 27/23
7-32.7		Feb 27/23
7-32.8		Feb 27/23
7-33		Original
7-34		Original
7-34A		Original
7-35		Original
7-36		Original
7-37		Original
7-38		Original
7-39		Original
7-40		Original
7-41		Original
7-42		Original
7-43		Original
7-44		Original
7-45		Original
7-46		Original
7-47		Original
7-48		Original
7-49		Original
7-50		Original
7-51		Original
7-52		Original
7-53		Original
7-54		Original
7-55		Original
7-56		Original
7-57		Original
8-1		Nov 8/23
8-1.1		Nov 8/23
8-2		May 17/23
8-2.1		May 17/23
8-2.2		May 17/23
8-2.3		May 17/23
8-3		May 17/23
8-4		May 17/23
8-5		May 17/23
8-5A		May 17/23
8-5.2		May 17/23
8-5.3		May 17/23
8-6		May 17/23
8-6.1		May 17/23
8-6.2		May 17/23
8-6.3		May 17/23
8-6.4		May 17/23
8-6.5		May 17/23
8-7		May 17/23
8-7.1		May 17/23
8-7.2		May 17/23
8-7.3		May 17/23
8-8		May 17/23
8-9		May 17/23
8-10		May 17/23
8-11		May 17/23
8-12		May 17/23
8-13		May 17/23
8-14		May 17/23
8-15		May 17/23
8-16		May 17/23
8-17		May 17/23
8-18		May 17/23
8-19		May 17/23
8-20		May 17/23
8-20.1		May 17/23
8-21		Nov 8/23
8-22		Nov 8/23
8-23		Nov 8/23
8-24		Nov 8/23
8-24.1		Nov 8/23
8-24.2		Nov 8/23
8-25		Nov 8/23
8-26		Nov 8/23
8-27		Nov 8/23
8-28		Nov 8/23
8-28.1		Nov 8/23
8-28.2		Nov 8/23
8-29		Nov 8/23
8-30		Nov 8/23
8-31		Nov 8/23
8-31.1		Nov 8/23
8-31.2		Nov 8/23
8-31.3		Nov 8/23
8-32		Nov 8/23
8-33		Nov 8/23
8-34		Nov 8/23
8-34.1		Nov 8/23
8-34.2		Nov 8/23
8-34.3		Nov 8/23
8-35		May 17/23
8-36		Feb 27/23
8-36.1		Feb 27/23
8-36.2		Feb 27/23
8-37		Original
8-38		Original
8-39		Original
8-40		Original
8-41		Original

UNCONTROLLED COPY WHEN DOWNLOADED OR PRINTED

Visit www.enstromhelicopter.com for instructions to order an original manual and to register for email notification updates.

EFFECTIVE PAGE LIST

Figure	Description	Page
8-42	Original	Nov 8/23
8-43	Original	Nov 8/23
8-44	Original	Nov 8/23
8-45	Original	Nov 8/23
8-46	Original	Nov 8/23
8-47	Original	Nov 8/23
8-48	Original	Nov 8/23
8-49	Original	Nov 8/23
8-50	Original	Nov 8/23
8-51	Original	Nov 8/23
9-1	Apr 22/19	Nov 8/23
9-2	Apr 22/19	Nov 8/23
9-3	Apr 22/19	Nov 8/23
9-4	Apr 22/19	Nov 8/23
9-5	Apr 22/19	Nov 8/23
9-6	Apr 22/19	Nov 8/23
9-7	Apr 22/19	Nov 8/23
9-8	Apr 22/19	Nov 8/23
9-9	Apr 22/19	Nov 8/23
9-10	Feb 27/23	Nov 8/23
9-11	Feb 27/23	Nov 8/23
9-12	Feb 27/23	Nov 8/23
9-13	Apr 22/19	Nov 8/23
9-14	Apr 22/19	Nov 8/23
9-15	Feb 27/23	Nov 8/23
9-16	Feb 27/23	Nov 8/23
9-17	Feb 27/23	Nov 8/23
9-18	Apr 22/19	Nov 8/23
9-19	Apr 22/19	Nov 8/23
9-20	Apr 22/19	Nov 8/23
9-21	Apr 22/19	Nov 8/23
9-22	Apr 22/19	Nov 8/23
10-1	Apr 22/19	Nov 8/23
10-2	Apr 22/19	Nov 8/23
10-3	Apr 22/19	Nov 8/23
10-4	Apr 22/19	Nov 8/23
10-5	Apr 22/19	Nov 8/23
10-6	Apr 22/19	Nov 8/23
10-7	Apr 22/19	Nov 8/23
10-8	Apr 22/19	Nov 8/23
10-9	Apr 22/19	Nov 8/23
10-10	Apr 22/19	Nov 8/23
10-11	Apr 22/19	Nov 8/23
10-12	Apr 22/19	Nov 8/23
10-13	Apr 22/19	Nov 8/23
10-14	Apr 22/19	Nov 8/23
11-0	Nov 8/23	Nov 8/23
11-1	Nov 8/23	Nov 8/23
11-2	Nov 8/23	Nov 8/23
11-3	Nov 8/23	Nov 8/23
11-4	Nov 8/23	Nov 8/23
11-5	Nov 8/23	Nov 8/23
11-6	Nov 8/23	Nov 8/23
11-7	Nov 8/23	Nov 8/23
11-8	Nov 8/23	Nov 8/23
11-9	Nov 8/23	Nov 8/23
11-10	Nov 8/23	Nov 8/23
11-11	Nov 8/23	Nov 8/23
11-12	Nov 8/23	Nov 8/23
11-13	Nov 8/23	Nov 8/23
11-14	Nov 8/23	Nov 8/23
11-15	Nov 8/23	Nov 8/23
11-16	Nov 8/23	Nov 8/23
11-17	Nov 8/23	Nov 8/23
11-18	Nov 8/23	Nov 8/23
11-19	Nov 8/23	Nov 8/23
11-20	Nov 8/23	Nov 8/23
11-21	Nov 8/23	Nov 8/23
11-22	Nov 8/23	Nov 8/23
11-23	Nov 8/23	Nov 8/23
11-24	Nov 8/23	Nov 8/23
11-25	Nov 8/23	Nov 8/23
11-26	Nov 8/23	Nov 8/23
11-27	Nov 8/23	Nov 8/23
11-28	Nov 8/23	Nov 8/23
11-29	Nov 8/23	Nov 8/23
11-30	Nov 8/23	Nov 8/23
11-31	Nov 8/23	Nov 8/23
11-32	Nov 8/23	Nov 8/23
11-33	Nov 8/23	Nov 8/23
11-34	Nov 8/23	Nov 8/23
11-35	Nov 8/23	Nov 8/23
11-36	Nov 8/23	Nov 8/23
11-37	Nov 8/23	Nov 8/23
11-38	Nov 8/23	Nov 8/23
11-39	Nov 8/23	Nov 8/23
11-40	Nov 8/23	Nov 8/23
11-41	Nov 8/23	Nov 8/23
11-42	Nov 8/23	Nov 8/23
11-43	Nov 8/23	Nov 8/23
11-44	Nov 8/23	Nov 8/23
11-45	Nov 8/23	Nov 8/23
11-46	Nov 8/23	Nov 8/23
11-47	Nov 8/23	Nov 8/23
11-48	Nov 8/23	Nov 8/23
11-49	Nov 8/23	Nov 8/23
11-50	Nov 8/23	Nov 8/23
11-51	Nov 8/23	Nov 8/23

UNCONTROLLED COPY WHEN DOWNLOADED OR PRINTED

Visit www.enstromhelicopter.com for instructions to order an original manual and to register for email notification updates.

EFFECTIVE PAGE LIST

Figure	Description	Page
11-52		Nov 8/23
11-53		Nov 8/23
11-54		Nov 8/23
11-55		Nov 8/23
11-56		Nov 8/23
11-57		Nov 8/23
11-58		Nov 8/23
11-59		Nov 8/23
11-60		Nov 8/23
11-61		Nov 8/23
11-62		Nov 8/23
11-63		Nov 8/23
11-64		Nov 8/23
11-65		Nov 8/23
11-66		Nov 8/23
11-67		Nov 8/23
11-68		Nov 8/23
11-69		Nov 8/23
11-70		Nov 8/23
11-71		Nov 8/23
11-72		Nov 8/23
11-73		Nov 8/23
11-74		Nov 8/23
11-75		Nov 8/23
11-76		Nov 8/23
11-77		Nov 8/23
11-78		Nov 8/23
11-79		Nov 8/23
11-80		Nov 8/23
11-81		Nov 8/23
11-82		Nov 8/23
11-83		Nov 8/23
11-84		Nov 8/23
11-85		Nov 8/23
11-86		Nov 8/23
11-87		Nov 8/23
11-88		Nov 8/23
11-89		Nov 8/23
11-90		Nov 8/23
11-91		Nov 8/23
11-92		Nov 8/23
11-93		Nov 8/23
11-94		Nov 8/23
11-95		Nov 8/23
11-96		Nov 8/23
11-97		Nov 8/23
11-98		Nov 8/23
11-99		Nov 8/23
11-100		Nov 8/23
11-101		Nov 8/23
11-102		Nov 8/23
11-103		Nov 8/23
11-104		Nov 8/23
11-105		Nov 8/23
11-106		Nov 8/23
11-107		Nov 8/23
11-108		Nov 8/23
11-109		Nov 8/23
11-110		Nov 8/23
11-111		Nov 8/23
11-112		Nov 8/23
12-0		Nov 8/23
12-0.1		May 17/23
12-0.2		May 17/23
12-0.3		May 17/23
12-0.4		May 17/23
12-0.5		May 17/23
12-1		May 17/23
12-2		May 17/23
12-2.1		May 17/23
12-2.2		May 17/23
12-3		May 17/23
12-3.1		May 17/23
12-4		May 17/23
12-5		May 17/23
12-5.1		May 17/23
12-5.2		May 17/23
12-6		Original
12-7		Original
12-8		Original
12-9		Original
12-10		Original
12-11		Original
12-12		Original
12-13		Original
12-14		May 17/23
12-15		May 17/23
12-15.1		May 17/23
12-15.2		May 17/23
12-16		May 17/23
12-17		May 17/23
12-18		Nov 8/23
12-18.1		May 17/23
12-18.2		May 17/23
12-18.3		May 17/23
12-18.4		May 17/23
12-18.5		May 17/23
12-19		Original

UNCONTROLLED COPY WHEN DOWNLOADED OR PRINTED

Visit www.enstromhelicopter.com for instructions to order an original manual and to register for email notification updates.

EFFECTIVE PAGE LIST

Figure	Description	Page	
12-20	Original	B-4	Feb 27/23
12-21	Original	B-5	Feb 27/23
12-22	Original	B-6	Feb 27/23
12-23	Original	B-7	Feb 27/23
12-24	Original	B-8	Feb 27/23
12-25	Original	B-9	Feb 27/23
12-26	Nov 8/23	B-10	Feb 27/23
12-27	Nov 8/23	B-11	Feb 27/23
12-28	Nov 8/23	B-12	Feb 27/23
12-29	Nov 8/23	B-13	Feb 27/23
13-1	Apr 22/19	B-14	Feb 27/23
13-2	Apr 22/19	B-15	Feb 27/23
A-1	Sep 30/13	B-16	Feb 27/23
A-2	Sep 30/13	B-17	Feb 27/23
A-3	Mar 24/17	B-18	Feb 27/23
A-4	Feb 27/23	B-19	Feb 27/23
A-5	Mar 24/17	B-20	Feb 27/23
A-6	Mar 24/17	B-21	Feb 27/23
B-1	Feb 27/23	B-22	Feb 27/23
B-2	Feb 27/23	B-23	Feb 27/23
B-3	Feb 27/23	B-24	Feb 27/23

UNCONTROLLED COPY WHEN DOWNLOADED OR PRINTED

Visit www.enstromhelicopter.com for instructions to order an original manual and to register for email notification updates.

PART NUMBER INDEX
SECTIONS 3 THROUGH 6, 9, 10, AND 11
FIGURES 7-4C, 7-4D, 8-1 THROUGH 8-11, 12-1A THROUGH 12-2B,12-5, 12-6A, AND 12-10

Part Number	Figure	Item
00-15073-01	3-30	30A
01-0770001-41	6-4	20
01-0770001-51	6-4	10
01-0770006-08	6-6	150A
01-0770028-05	6-6	150
01-0770028-05	6-6	150A
01-0770029	6-4	140
01-0770029-R	6-6	90
01-0770034-02	6-5	180
01-0770054-00	6-5	130
01-0770054-02	6-5	120
01-0770119-09	6-4	350
01-0770119-15	11-8	80
01-0770119-15	11-9	90
01-0790006-00	6-5	150
01-0790006-01	6-5	170
01-0790006-02	6-5	140
01-0790006-03	6-5	160
01-0790340-03	6-5	170
01-0790340-04	6-5	160
0110	11-1	–
0110	11-2	–
0110	11-3	–
0110	11-4	300
01-691-04	12-5	160
01-691-05	8-4	100
01-824-08E-011	4-4	200
01-824-08E-011	5-3	520
02-0250276-00	6-6	130
02-0350003-01	6-4	–
02-0350003-01	6-4	–
02-0350003-01	6-4	–
02-0350281-0	6-4	–
02-03705534-00	6-4	–
02-691-04	5-2	170
02A21376	3-23	650
02A22619	3-8	190
037360-004	3-28	–
037360-104	3-3	280
037360-115	3-3	160
037360-124	3-28	–
037360-160	3-3	280
037360-161	3-3	160
037360-161	3-3	280
07DU08	5-2	140
08DU08	8-1	190
09455-01-824-08E-011	5-3	520
099001-174	3-27	20
099001-176	3-27	10
099001-177	3-27	30
099001-178	3-27	40
099005-401	3-27	50
09-DU-10	8-10	390
09-DU-12	8-9	400
09-DU-12	8-10	400
1	3-3	320
1	3-4	80
1	3-5	110
1/2-6NA	11-19	225
1/4 Harper	12-5	90
1/4 Harper	12-6A	140
1/4 Harper	3-3	60
1/4 Harper	5-1	110
1/4 Harper	5-3	370
1/4 Harper	5-5	120
1/4 Harper	8-11	160
1/4 Harper	8-11	20
1/4 Harper	8-3	110
1/4 Harper	8-5	350
1/4 Harper	12-10	290
1/4 Harper	8-8	120
1/4” O.D. X 24” Long	6-13	150
1/4-6NA	11-16	40
1/8”	6-13	160
1/8-6NA	6-4	190
1/8X8-32	3-24	450

UNCONTROLLED COPY WHEN DOWNLOADED OR PRINTED

Visit www.enstromhelicopter.com for instructions to order an original manual and to register for email notification updates.

PART NUMBER INDEX
SECTIONS 3 THROUGH 6, 9, 10, AND 11
FIGURES 7-4C, 7-4D, 8-1 THROUGH 8-11, 12-1A THROUGH 12-2B,12-5, 12-6A, AND 12-10

Part Number	Figure	Item
10005498	3-26	50
10065 H1L5	4-2	80
101678-0002	3-8	110
10-176485-121	6-1	100
102-00007	5-6	170
10-357290-1	11-8	275
10-357290-1	11-9	165
10-357290-1	11-1	270
10-357290-1	11-2	160
10-357290-1	11-3	160
10-357290-1	11-5	10
10-357290-1	11-6	370
10-357290-1	11-7	580
103574-00	3-3	200
10-382780-12	6-2	40
1040	11-8	90
1040	11-9	85
1040	11-1	410
1040	11-2	310
1040	11-3	310
1040	11-4	290
1040	11-5	40
1040	11-6	170
1040	11-7	190
10-400608-123	6-1	100
10-400608-123	6-2	40
10-400608-243	6-2	40
1061	3-24	–
1102	5-6	244
1-10-AM5201	9-5	5
11-691-04	12-5	140
11-691-05	8-4	130
1219-4200-Z3Y	3-2	113
1219-4200-Z3Y	3-20	–
1219-4200-Z3Y	3-20B	–
1219-4200-Z3Y	3-20B	–
1239	3-9	21
12500750	4-4	140
12500750-125B	4-4	140
12528Y-A164	12-2B	20
12B	9-2	35
12LHTA17-M62	3-18	–
12LHTA1-M62	3-18	–
12T35-2	11-5	160
12TS15-2	11-8	265
12TS15-2	11-9	150
12TS15-2	11-5	160
12TS15-2	11-7	560
13241-LDS	5-6	–
1-480305-0	11-8	–
1-480318-0	11-7	–
1-480319-0	6-11	–
1-480319-0	11-7	–
149-24HT	3-31	–
1500-052-1	11-1	330
1500-052-1	11-2	220
1500-052-1	11-3	220
1500-052-1	11-4	220
1500-052-1	11-5	230A
1500-052-2	6-3	–
1500-052-2	11-1	70
1500-052-2	11-5	250
1500-052-2	11-6	190
1500-052-205	11-5	230
1500-052-205	11-6	400
1500-056-3	11-6	410
15-0007-5	6-5	10
1512	6-6	350
1512-140	6-4	90
1539-001	12-1A	200
1540	5-6	–
1540	5-7	90
1592-30	11-1	–
1592-30	11-2	–
1592-30	11-3	–
1592-30	11-4	–

UNCONTROLLED COPY WHEN DOWNLOADED OR PRINTED

Visit www.enstromhelicopter.com for instructions to order an original manual and to register for email notification updates.

PART NUMBER INDEX
SECTIONS 3 THROUGH 6, 9, 10, AND 11
FIGURES 7-4C, 7-4D, 8-1 THROUGH 8-11, 12-1A THROUGH 12-2B,12-5, 12-6A, AND 12-10

Part Number	Figure	Item
1592-30	11-5	–
15PA90-4R	11-8	270
15PA90-4R	11-9	155
15PA90-4R	11-7	570
160-012-70	11-8	190
160-012-70	11-9	160
160-012-70	11-7	410
16-1	12-10	320
1637-B	12-2A	50
1637-B	4-1	330
1637-B	8-1	70
1637-B1	8-3A	180
1641-B	4-1	260
1641-B	4-2	160
1641-B	5-4	320
1641-B	8-4	90
1650	4-2	160
1650	5-4	130
1650	12-10	220
1678	11-9	180
1684	11-8	200
1684	11-7	430
1687	11-8	245
1687	11-7	530
1691-C	3-8	120
169E-190-12L	11-2	140
169E-909-2L	11-1	240
169E-909-2L	11-2	130
169E-909-2L	11-3	130
169E-909-2L	11-4	130
169E-909-3L	11-3	–
169E-910-11-3L	11-3	–
169E-910-11L	11-1	230
169E-910-11L	11-2	120
169E-910-11L	11-3	120
169E-910-11L	11-4	120
169E-910-12-1L	11-3	–
169E-910-12L	11-1	250
169E-910-12L	11-3	140
169E-910-12L	11-4	140
169E-910-14-4L	11-1	200
169E-910-14-4L	11-2	90
169E-910-14-4L	11-3	90
169E-910-14-4L	11-4	90
169E-910-14-5L	11-3	–
169E-910-15-1L	11-3	–
169E-910-15L	11-1	220
169E-910-15L	11-2	110
169E-910-15L	11-3	110
169E-910-15L	11-4	110
169E-914-1L	11-1	210
169E-914-1L	11-2	100
169E-914-1L	11-3	100
169E-914-1L	11-4	100
169E-914-2L	11-3	–
16DU12	8-5	230
16-DU-12	8-3A	60
16-DU-14	8-3A	60
16-DU-16	8-3A	60
1728-B	5-3	270
1815	11-1	–
1815	11-3	–
1815	11-5	–
1816	6-4	120
1816	6-5	20
18207	3-26	150
18286-00	3-26	130
183204	3-26	150
184969	3-4	120
1877	12-10	110
1886	11-18	130
1886	12-2B	150
1911-B	4-1	320
1911-B	5-4	320
1911-B	8-3A	180
1911-B1	11-18	70

UNCONTROLLED COPY WHEN DOWNLOADED OR PRINTED

Visit www.enstromhelicopter.com for instructions to order an original manual and to register for email notification updates.

PART NUMBER INDEX
SECTIONS 3 THROUGH 6, 9, 10, AND 11
FIGURES 7-4C, 7-4D, 8-1 THROUGH 8-11, 12-1A THROUGH 12-2B,12-5, 12-6A, AND 12-10

Part Number	Figure	Item
1911-B1	12-2B	140
1911-B1	8-1	70
19-130074-009	6-6	100
19-150002-009	6-4	–
19-150002-009	6-4	–
19-150002-009	6-4	–
1B7536	5-6	135
1SE1	5-1	310
2000653-001	6-5	10
20040S	10-1	18
20040S	3-3	260
20042A	3-6	10
20042A	3-7	180
20044S	10-1	4
20-0824130A00	6-4	–
2-010	3-26	80
201F-5006	3-31	–
201NP	5-3	300
20206A	3-7	310
2-025 E515-80	4-4	110
2-025 E515-80	4-4	40
2-026	3-9	60
2-029	4-2	140
202A-13BTR	11-3	330
202A-13BTR	11-5	270
202A-13BTR	11-16	10
202A-1A	11-2	330
202A-1ATR	11-4	–
20526	5-4	290
206036-1	8-5	190
206037-1	8-5	200
206044-1	8-5	200A
206070-1	8-5	210
206322-1	8-5	210A
20TC2-CA-10	11-6	–470A
20TC2-CA-15	11-1	280
20TC2-CA-15	11-2	170
20TC2-CA-20	11-1	300
20TC2-CA-20	11-2	190
20TC2-CA-20	11-3	190
20TC2-CA-20	11-4	190
20TC2-CA-20	11-5	200A
20TC2-CA-20	11-6	470
20TC2-CA-3	11-1	260
20TC2-CA-3	11-2	150
20TC2-CA-3	11-3	150
20TC2-CA-3	11-4	150
20TC2-CA-3	11-5	190A
20TC2-CA-3	11-6	480
20TC2-CA-5	11-3	170
20TC2-CA-5	11-4	170
20TC2-CA-5	11-5	180A
20TC2-CA-5	11-6	460
20TC2-CA-7.5	11-1	140
20TC2-CA-7.5	11-1	290
20TC2-CA-7.5	11-2	30
20TC2-CA-7.5	11-2	180
20TC2-CA-7.5	11-3	30
20TC2-CA-7.5	11-3	180
20TC2-CA-7.5	11-3	210
20TC2-CA-7.5	11-3	230
20TC2-CA-7.5	11-4	30
20TC2-CA-7.5	11-4	160
20TC2-CA-7.5	11-4	180
20TC2-CA-7.5	11-4	210
20TC2-CA-7.5	11-4	230
20TC2-CA-7.5	11-5	170A
20TC2-CA-7.5	11-6	–460A
210A155	8-9	100
210A155	8-10	100
210A249	8-9	–110
210A249	8-10	–110
2-137 E515-80	4-4	150
21FA-540	12-1A	130
21FA-540	5-6	–
2212A	3-22	250

UNCONTROLLED COPY WHEN DOWNLOADED OR PRINTED

Visit www.enstromhelicopter.com for instructions to order an original manual and to register for email notification updates.

PART NUMBER INDEX
SECTIONS 3 THROUGH 6, 9, 10, AND 11
FIGURES 7-4C, 7-4D, 8-1 THROUGH 8-11, 12-1A THROUGH 12-2B,12-5, 12-6A, AND 12-10

Part Number	Figure	Item
2212A	3-23	260
2-214	3-9	70
2-214	5-6	200
22-169-09-1L	11-1	190
22-169-09-1L	11-2	80
22-169-09-1L	11-3	80
22-169-09-1L	11-4	80
2-218	3-9	40
222	11-1	380
222	11-2	280
222	11-3	280
222	11-4	–
222	11-5	–
22-370-60	11-8	405
22-370-60	11-9	315
22-370-60	11-1	–
22-370-60	11-2	–
22-370-60	11-3	–
22-370-60	11-4	–
22-370-60	11-5	–
22-370-60	11-7	880
229001P	6-12	70
2-326 E515-80	4-4	90
2335-265-1	11-8	460
2335-265-1	11-9	370
2335-265-1	11-5	–
2335-265-1	11-7	980
23S-094-0625	4-3	70
2524917-1	3-31	–
270624141H0080	3-22	220
2716-00	11-5	–
28-00013-1	11-21	190
28-00013-3	11-21	200
28-00014-1	11-21	10
28-00014-3	11-21	20
28-00015-1	11-21	30
28-00015-3	11-21	40
28-00016-1	11-21	50
28-00016-3	11-21	60
28-00017-1	11-21	–
28-00018-1	11-21	–
28-01011-3	6-13	200
28-01026-1	11-5	270B
28-01026-11	11-19	70
28-01026-11	11-17	–
28-01026-3	11-5	270A
28-01026-3	11-17	–
28-01039-1	3-3	–
28-01041-1	12-1B	130
28-01041-3	12-1B	130
28-01058-15	3-5.1	–
28-01058-3	3-5.1	140
280-113006-19	3-10	20
280-113016-29	6-10	80
280-113016-31	6-10	90
280-113019-31	6-9	80
280-113033-1	9-1	1B
280-113033-3	9-1	1C
280-124001-1	3-22	10
280-124001-1	3-23	10
280-124001-1	3-24	490
280-124001-1	3-26	–
280-124001-3	3-26	190
280-124301-1	3-24	10
280-124301-15	3-24	–
280-124301-16	3-24	–
280-124301-2	3-24	20
280-124301-901	3-24	10
280-124301-902	3-24	20
280-126001-109	3-20	–
280-126001-109	3-20A	–
280-126001-109	3-20B	–
280-126001-11	3-20B	–
280-126001-15	3-20	–
280-126001-15	3-20A	–
280-126001-15	3-20B	–

UNCONTROLLED COPY WHEN DOWNLOADED OR PRINTED

Visit www.enstromhelicopter.com for instructions to order an original manual and to register for email notification updates.

PART NUMBER INDEX
SECTIONS 3 THROUGH 6, 9, 10, AND 11
FIGURES 7-4C, 7-4D, 8-1 THROUGH 8-11, 12-1A THROUGH 12-2B,12-5, 12-6A, AND 12-10

Part Number	Figure	Item
280-126001-3	3-20B	–
280-126001-33	3-19	90
280-126001-33	3-20B	–
280-126001-34	3-20	–
280-126001-35	3-19	110
280-126001-37	3-19	130
280-126001-39	3-19	120
280-126001-41	3-19	100
280-126001-45	3-6	290
280-126001-45	3-7	220
280-126001-47	3-6	280
280-126001-47	3-7	230
280-126001-51	3-19	80
280-126001-51	3-20	–
280-126001-51	3-20B	–
280-126001-53	3-20	–
280-126001-53	3-20A	–
280-126001-53	3-20B	–
280-126001-55	3-20	–
280-126001-55	3-20A	–
280-126001-55	3-20B	–
280-126001-69	3-20	610
280-126001-69	3-20A	610
280-126001-69	3-20B	610
280-126001-9	3-20	210
280-126001-9	3-20A	210
280-126001-9	3-20B	210
280-126001-906	3-20B	20
280-126001-908	3-20	20
280-126001-908	3-20A	20
280-126002-1	3-6	190
280-126002-1	3-7	210
280-126003-1	3-6	240
280-126003-1	3-7	170
280-127500-11	10-2	16
280-127502-1	10-2	20
280-127505-13	10-2	18
280-127505-17	3-18	–
280-127505-17	3-20	–
280-127505-17	3-20A	–
280-127505-17	3-20B	–
280-127505-17	3-5.1	70
280-127507-11	10-2	17
280-180000	11-3	–
280-180000	11-4	–
280-180001-11	9-2	9
280-180001-12	9-2	8
280-180001-13	9-2	10
280-180003-3	11-6	300
280-180004	11-3	250
280-180004-19	11-4	250
280-180004-21	11-3	260
280-180004-21	11-4	260
280-180004-25	11-6	160
280-180005-1	11-4	320
280-180005-2	11-4	310
280-180006-1	9-2	6
280-180007-1	11-21	1090
280-181000-1	11-15	–
280-181000-11	11-15	30
280-181000-13	11-15	35
280-181000-13	11-14	–40A
280-181000-15	11-15	40
280-181000-17	11-15	5
280-181000-19	11-15	10
280-181000-21	11-15	70
280-181000-23	11-15	45
280-181000-25	11-15	50
280-181000-911	11-12	–110A
280-181000-911	11-14	–30A
280-181000-913	11-12	–90A
280-181000-915	11-12	–100A
280-181000-915	11-14	–50A
280-181000-917	11-12	–80A
280-181000-917	11-14	–60A
280-181000-919	11-12	–60A

UNCONTROLLED COPY WHEN DOWNLOADED OR PRINTED

Visit www.enstromhelicopter.com for instructions to order an original manual and to register for email notification updates.

PART NUMBER INDEX
SECTIONS 3 THROUGH 6, 9, 10, AND 11
FIGURES 7-4C, 7-4D, 8-1 THROUGH 8-11, 12-1A THROUGH 12-2B,12-5, 12-6A, AND 12-10

Part Number	Figure	Item
280-181000-919	11-14	–70A
280-181000-921	11-12	–70A
280-181000-921	11-14	–80A
280-210004-5	6-5	–
280-210007-1	6-8	30
280-210007-11	6-8	–
280-210007-13	6-8	–
280-210007-3	6-8	30
280-221001	9-3	–
28-10-60-11	6-13	210
28-111004-1	3-10	130
28-111004-1	3-15	150
28-111004-15	3-15	150
28-111004-17	3-15	150
28-11112-1	3-6	140
28-11112-1	3-7	110
28-11120-1	11-11	160
28-11121-4	11-11	210
28-11121-4	11-14	80
28-11121-7	11-11	170
28-11121-901	11-11	230
28-11121-901	11-12	70
28-11128-1	5-1	460
28-11238-1	12-2A	–55
28-11298-13	3-12	10
28-11303-1	9-1	1
28-11303-4	9-1	12
28-11303-5	9-1	1A
28-113040-11	9-1	2
28-113040-13	9-1	2A
28-113042-11	9-1	9
28-113054-1	6-5	250
28-113054-1	7-4D	10
28-113054-12	7-4D	20
28-113055-1	7-4D	–
28-113069-1	9-1	14
28-11307-901	8-5	560
28-11307-902	8-5	–550
28-113101-1	7-4C	500
28-113101-2	7-4C	-510
28-113101-3	7-4C	380
28-113101-4	7-4C	-390
28-113103-1	7-4C	540
28-113103-2	7-4C	-550
28-113103-3	7-4C	480
28-113103-4	7-4C	-490
28-113107-11	3-11	–
28-113107-13	3-11	–
28-113107-15	3-11	–
28-113108-11	3-11	–
28-113108-13	3-11	–
28-113108-15	3-11	–
28-113112-11	7-4C	410
28-113112-12	7-4C	-420
28-113113-11	7-4C	370
28-113113-13	7-4C	310
28-113114-1	7-4C	200
28-113114-2	7-4C	-210
28-113118-11	7-4C	220
28-113118-12	7-4C	-230
28-113120-11	7-4C	400
28-113122-1	7-4C	150
28-113122-2	7-4C	-160
28-113122-3	7-4C	170
28-113122-4	7-4C	-180
28-113124-11	7-4C	580
28-113124-12	7-4C	-590
28-113125-11	7-4C	560
28-113125-12	7-4C	-570
28-113128-11	7-4C	660
28-113129-11	7-4C	640
28-113134-11	7-4C	600
28-113134-12	7-4C	-610
28-113135-11	7-4C	320
28-113135-12	7-4C	-330
28-113136-11	7-4C	340

UNCONTROLLED COPY WHEN DOWNLOADED OR PRINTED

Visit www.enstromhelicopter.com for instructions to order an original manual and to register for email notification updates.

PART NUMBER INDEX
SECTIONS 3 THROUGH 6, 9, 10, AND 11
FIGURES 7-4C, 7-4D, 8-1 THROUGH 8-11, 12-1A THROUGH 12-2B,12-5, 12-6A, AND 12-10

Part Number	Figure	Item
28-113136-12	7-4C	-350
28-113139-1	7-4C	10
28-113139-2	7-4C	-20
28-113140-1	7-4C	430
28-11360-1	6-9	70
28-11395-1	9-2	5
28-11395-1	9-3	50
28-11395-1	9-4	50
28-114016-7	3-5.1	160
28-11404-1	9-2	11
28-11404-13	9-3	290
28-11404-13	9-4	230
28-11430-1	9-1	11
28-11431-1	9-1	13
28-11452	10-1	22
28-11461-1	9-5	100
28-11462-11	9-5	95
28-11464-1	9-5	75
28-11466-1	9-5	70
28-11468-2	9-5	35
28-11475-1	9-5	90
28-11500-1	3-17	–
28-11500-5	3-17	50
28-11501-1	3-16	–
28-11501-10	3-16	20
28-11501-12	3-16	10
28-11501-15	3-16	10
28-11501-17	3-16	10
28-11501-3	3-16	–
28-11501-3	3-17	10
28-11501-4	3-16	40
28-11501-4	3-17	170
28-11501-901	3-16	50
28-11502-5	3-16	60
28-11504-1	9-2	43
28-11600-13	9-2	1
28-11600-17	9-2	2
28-11600-19	9-2	28
28-11600-20	9-1	26
28-11600-21	9-1	27
28-116002-13	6-11	140
28-116002-15	6-11	140
28-11600-3	9-1	17
28-11600-4	9-1	18
28-116004-3	9-1	20
28-11600-5	9-1	16
28-116005-1	9-1	21
28-11600-6	9-2	2A
28-116006-1	9-1	22
28-11600-7	9-2	1A
28-116007-1	9-1	23
28-11600-8	9-1	19
28-116008-1	9-1	24
28-11600-9	9-2	28A
28-116009-1	9-1	25
28-11603-1	9-2	3
28-11608-11	9-3	30
28-11608-11	9-4	30
28-11608-13	9-3	30
28-11608-13	9-4	30
28-11610-3	9-3	–
28-11610-5	9-3	–
28-11611-1	9-3	440
28-11611-2	9-3	430
28-11612-11	9-3	–
28-11613-11	9-3	460
28-11613-12	9-3	450
28-11614-11	9-3	480
28-11614-12	9-3	470
28-11615-13	9-3	490
28-11615-15	9-3	490
28-11618-11	9-3	510
28-11618-12	9-3	500
28-11620-1	9-4	130
28-11621-11	9-4	170
28-11621-13	9-4	180

UNCONTROLLED COPY WHEN DOWNLOADED OR PRINTED

Visit www.enstromhelicopter.com for instructions to order an original manual and to register for email notification updates.

PART NUMBER INDEX
SECTIONS 3 THROUGH 6, 9, 10, AND 11
FIGURES 7-4C, 7-4D, 8-1 THROUGH 8-11, 12-1A THROUGH 12-2B,12-5, 12-6A, AND 12-10

Part Number	Figure	Item
28-11622-1	9-4	20
28-11622-13	9-3	21
28-11622-15	9-4	20A
28-11622-17	9-3	21A
28-11622-21	9-4	20A
28-11623-1	9-4	–
28-11623-2	9-4	–
28-11624	9-4	–
28-11625-11	9-4	160
28-11625-13	9-3	420
28-11626	9-3	–
28-121000-19	3-3	330
28-121000-19	3-5	100
28-121000-901	3-7	–
28-12100-10	3-22	320
28-121001-1	3-9	30
28-12100-12	3-22	450
28-12100-13	11-10	60
28-121005-19	3-8	30
28-12100-6	11-10	110
28-12100-7	11-10	10
28-121007-1	3-4	210
28-12100-8	3-22	60
28-121008-1	3-4	230
28-121008-3	3-4	230
28-12100-9	11-10	20
28-12100-903	3-6	40
28-12100-904	3-6	30
28-121009-3	3-8	90
28-121011-1	3-8	130
28-12101-11	3-22	190
28-121011-3	3-8	10
28-121012-11	3-8	40
28-121013-1	3-7	20
28-121014-1	3-7	30
28-12112-4	3-9	10
28-12112-5	3-9	10
28-12116-11	3-9	50
28-12118-2	3-9	10
28-12122-1	3-9	20
28-12125-1	3-9	30
28-12127-11	3-9	80
28-12133-11	3-23	630
28-12134-13	3-8	20
28-12134-15	3-8	20
28-12134-991	3-8	–
28-12140-1	3-5	20
28-12141-11	3-30	20A
28-12142-1	3-22	60
28-12145-1	3-5	10
28-12146-1	3-22	450
28-12146-1	3-23	450
28-12149-1	3-20	40
28-12149-1	3-20A	40
28-12149-1	3-20B	40
28-12150-1	3-7	350
28-12151-1	3-7	300
28-12155-1	3-8	60
28-12155-15	3-8	65
28-12158-11	3-7	370
28-12160-11	3-7	340
28-12162-1	3-3	250
28-123005-5	3-4	70
28-123007-1	3-3	70
28-123007-11	3-3	70
28-123009-11	3-3	80
28-123009-13	3-3	90
28-123009-15	3-3	90
28-123009-17	3-3	80
28-12301-1	3-1	20
28-123011-1	3-4	160
28-123012-1	3-4	130
28-123013-1	3-4	110
28-123014-1	3-4	20
28-123015-1	3-4	10
28-123016-1	3-4	200

UNCONTROLLED COPY WHEN DOWNLOADED OR PRINTED

Visit www.enstromhelicopter.com for instructions to order an original manual and to register for email notification updates.

PART NUMBER INDEX
SECTIONS 3 THROUGH 6, 9, 10, AND 11
FIGURES 7-4C, 7-4D, 8-1 THROUGH 8-11, 12-1A THROUGH 12-2B,12-5, 12-6A, AND 12-10

Part Number	Figure	Item
28-123017-1	3-7	100
28-123018-1	3-23	210
28-123019-1	3-2	280
28-123019-1	3-3	40
28-12302-1	3-1	10
28-123022-11	3-3	10
28-123024-1	3-4	150
28-12305	10-1	13
28-12305	10-1	2
28-12305	10-2	14
28-12305	10-2	2
28-12305-1	3-18	40
28-12313-1	3-1	150
28-12329-1	3-1	120
28-12329-1	3-2	280
28-12335-1	3-2	40
28-12341-1	3-2	90
28-12344-11	3-2	–
28-12345-1	3-2	–
28-12350-1	3-2	110
28-12350-2	3-2	110
28-12350-3	3-2	110
28-12350-5	3-2	110
28-12353-1	3-2	70
28-12354-1	3-2	20
28-12354-2	3-2	20
28-12357-1	3-1	100
28-12357-1	3-2	50
28-12358-1	3-2	200
28-12359-11	3-3	–
28-12359-13	3-3	–
28-12360-1	3-3	190
28-12361-1	3-2	10
28-12362-1	3-2	–
28-12362-1	3-2	100
28-12400-12	3-24	260
28-12400-12	11-13	160
28-12400-16	3-24	50
28-124002-3	3-23	61
28-12400-23	3-22	40
28-12400-23	3-23	40
28-124003-1	3-4	180
28-124003-13	3-23	430
28-124003-19	3-23	–
28-124003-5	3-8	70
28-124005-1	3-23	484
28-124006-11	3-23	150
28-12400-910	3-23	330
28-12400-919	3-24	90
28-12401-1	3-24	10
28-12401-2	3-24	20
28-12408-1	3-25	40
28-12409-1	3-25	30
28-12410-1	3-25	100
28-12411-3	3-25	80
28-12415-9	3-2	130
28-12416-3	3-24	480
28-12416-3	11-21	220
28-12416-4	3-24	470
28-12417-1	3-26	160
28-12418-1	3-24	500
28-12419-1	3-24	520
28-12420-11	3-24	580
28-12420-11	11-21	230
28-12420-13	3-24	570
28-12420-13	11-21	240
28-12420-15	3-24	560
28-12420-15	11-21	250
28-12421-1	3-24	–
28-12422-1	3-24	30
28-12424-1	3-24	610
28-12424-1	11-21	260
28-12425-1	11-21	270
28-12426-1	11-21	280
28-12427-1	11-21	290
28-12428-1	11-21	300

UNCONTROLLED COPY WHEN DOWNLOADED OR PRINTED

Visit www.enstromhelicopter.com for instructions to order an original manual and to register for email notification updates.

PART NUMBER INDEX
SECTIONS 3 THROUGH 6, 9, 10, AND 11
FIGURES 7-4C, 7-4D, 8-1 THROUGH 8-11, 12-1A THROUGH 12-2B,12-5, 12-6A, AND 12-10

Part Number	Figure	Item
28-12429-3	3-24	11
28-12429-4	3-24	21
28-12433-1	3-24	600
28-12433-1	11-21	310
28-12433-1	11-21	70
28-12433-13	11-21	320
28-12433-2	3-24	600
28-12433-2	11-21	310
28-12433-21	11-21	80
28-12436-1	3-24	400
28-12436-1	3-24	410
28-12437-1	3-24	420
28-12437-3	3-24	420
28-12438-1	3-24	210
28-12438-3	3-24	210
28-12439-1	3-24	330
28-12440-1	3-24	110
28-12441-1	3-24	390
28-12441-3	3-24	390
28-12450-11	3-24	590
28-12450-11	11-21	330
28-12450-13	3-24	590
28-12450-13	11-21	340
28-12451-1	3-24	370
28-12452-1	3-24	290
28-12453-1	3-24	280
28-12456-1	3-24	400
28-12457-1	3-24	410
28-12458-1	3-24	330
28-12459-1	3-24	370
28-12460-1	3-24	340
28-12461-1	3-23	340
28-12461-3	3-23	600
28-12462-1	3-23	230
28-12462-3	3-23	590
28-12463-1	3-23	480
28-12464-3	3-23	60
28-12465-1	3-24	620
28-12470-11	11-8	335
28-12470-11	11-9	265
28-12470-11	11-15	–
28-12470-11	11-15	–
28-12470-11	11-7	710
28-12471-11	11-8	445
28-12471-11	11-9	350
28-12471-11	11-15	–
28-12471-11	11-7	940
28-12472-11	11-8	345
28-12472-11	11-9	275
28-12472-11	11-15	–
28-12472-11	11-7	700
28-12473-11	11-8	435
28-12473-11	11-9	345
28-12473-11	11-15	–
28-12473-11	11-15	–
28-12473-11	11-7	920
28-12474-11	11-8	450
28-12474-11	11-9	360
28-12474-11	11-15	–
28-12474-11	11-7	960
28-12475-11	11-8	440
28-12475-11	11-9	355
28-12475-11	11-15	–
28-12475-11	11-7	930
28-12478-11	3-24	630
28-12479-11	11-21	90
28-12480-1	3-23	540
28-125000-11	3-28	–
28-12500-1	3-27	–
28-125007	10-1	1
28-125007	10-2	1
28-125008-1	3-8	160
28-125011-1	3-29	10
28-125011-31	3-29	40
28-125011-33	3-29	50
28-125011-49	3-29	50

UNCONTROLLED COPY WHEN DOWNLOADED OR PRINTED

Visit www.enstromhelicopter.com for instructions to order an original manual and to register for email notification updates.

PART NUMBER INDEX
SECTIONS 3 THROUGH 6, 9, 10, AND 11
FIGURES 7-4C, 7-4D, 8-1 THROUGH 8-11, 12-1A THROUGH 12-2B,12-5, 12-6A, AND 12-10

Part Number	Figure	Item
28-125011-5	3-29	30
28-125016-11	3-28	–
28-125017-1	3-28	180
28-125082-1	3-29	20
28-125082-3	3-29	20
28-125082-3	3-8	–
28-12544-3	3-28	180
28-12551-13	3-28	270A
28-12551-15	3-28	270
28-12551-17	3-28	270
28-12551-19	3-28	270
28-12551-21	3-28	270
28-12551-21	3-28	270
28-12552-3	3-28	190
28-12552-5	3-28	190
28-12554-101	3-28	231B
28-12554-103	3-28	231A
28-12554-7	3-28	231D
28-12554-9	3-28	231C
28-12555-1	3-28	240A
28-12555-7	3-28	240
28-12555-7	3-28	240
28-12555-7	3-28	240
28-12555-7	3-28	240
28-12560-1	3-28	260
28-12560-1	3-28	260
28-12560-1	3-28	260
28-12560-1	3-28	260
28-12570-3	3-28	370
28-12574-11	3-28	210
28-12575-1	3-3	160
28-12575-1	3-3	340
28-12576-1	3-3	280
28-12577-1	3-28	130
28-12577-1	3-3	–
28-12600-4	3-18	80
28-12600-4	3-19	160
28-126004-1	3-19	10
28-126004-11	3-19	–
28-126005-1	3-19	50
28-126006-1	3-19	20
28-126007-17	3-20	240
28-126007-3	3-20	240
28-126007-3	3-20A	240
28-126007-3	3-20B	240
28-126007-5	3-20	220
28-126007-5	3-20A	220
28-126007-5	3-20B	220
28-126007-7	3-20	220
28-126008-1	3-20	330
28-126008-1	3-20A	330
28-126008-1	3-20B	330
28-12601-1	3-21	10
28-12603-1	3-21	–
28-12603-3	3-21	–
28-12603-4	3-21	–
28-12605-1	3-21	–
28-12607-101	3-20	230
28-12607-13	3-20	250
28-12607-6	3-20	250
28-12607-6	3-20A	250
28-12607-6	3-20B	250
28-12607-8	3-20	230
28-12607-8	3-20A	230
28-12607-8	3-20B	230
28-12608-1	3-18	100
28-12608-3	3-18	–
28-12608-4	3-18	–
28-12608-4	3-20	–
28-12608-4	3-20A	–
28-12608-4	3-20B	–
28-12609-1	3-18	90
28-12609-3	3-18	90
28-12609-3	3-20	310
28-12609-3	3-20A	310
28-12609-3	3-20B	310

UNCONTROLLED COPY WHEN DOWNLOADED OR PRINTED

Visit www.enstromhelicopter.com for instructions to order an original manual and to register for email notification updates.

PART NUMBER INDEX
SECTIONS 3 THROUGH 6, 9, 10, AND 11
FIGURES 7-4C, 7-4D, 8-1 THROUGH 8-11, 12-1A THROUGH 12-2B,12-5, 12-6A, AND 12-10

Part Number	Figure	Item
28-12610-12	3-20	170
28-12610-12	3-20A	170
28-12610-12	3-20B	170
28-12610-13	3-20	180
28-12610-13	3-20A	180
28-12610-13	3-20B	180
28-12610-3	3-20	10
28-12610-3A	3-20	–
28-12610-3A	3-20A	–
28-12611-1	3-18	20
28-12611-4	3-18	60
28-12611-5	3-18	30
28-12611-5	3-19	–
28-12611-5	3-20	150
28-12611-5	3-20A	150
28-12611-5	3-20B	150
28-12611-8	3-18	50
28-12612-1	3-18	70
28-12613-1	3-18	10
28-12613-4	3-20	270
28-12613-4	3-20A	270
28-12613-4	3-20B	270
28-12613-5	3-20	260
28-12613-5	3-20A	260
28-12613-5	3-20B	260
28-12614-1	3-20	290
28-12614-1	3-20A	290
28-12614-1	3-20B	290
28-12615-1	3-20	300
28-12615-1	3-20A	300
28-12615-1	3-20B	300
28-12616-1	3-20	280
28-12616-1	3-20A	280
28-12616-1	3-20B	280
28-12617-1	3-20	320
28-12617-1	3-20A	320
28-12617-1	3-20B	320
28-12618-1	3-6	220
28-12618-1	3-7	190
28-12618-13	3-7	200
28-12618-5	3-6	220
28-12618-5	3-7	190
28-12619-1	3-20	480
28-12619-1	3-20A	480
28-12619-1	3-20B	480
28-12619-4	3-20	–
28-12619-4	3-20A	–
28-12619-4	3-20B	–
28-12619-5	3-20	–
28-12619-5	3-20A	–
28-12619-5	3-20B	–
28-12620-1	3-20	190
28-12620-1	3-20A	190
28-12620-1	3-20B	190
28-12621-1	3-18	–
28-12621-1	3-20	–
28-12621-1	3-20A	–
28-12621-1	3-20B	–
28-12623-1	3-6	180
28-12624-1	3-6	210
28-12624-1	3-7	200
28-12625-1	3-6	190
28-12626-1	3-6	200
28-12626-1	3-7	270
28-12626-13	3-6	200
28-12626-13	3-7	270
28-12628-11	3-20	290
28-12629-11	3-20	280
28-12642-1	3-21	–
28-12644-1	3-21	–
28-12645-1	3-20B	200
28-12646-11	3-20A	–
28-12646-11	3-20B	–
28-12646-13	3-20	–
28-12646-13	3-20A	–
28-12646-13	3-20B	–

UNCONTROLLED COPY WHEN DOWNLOADED OR PRINTED

Visit www.enstromhelicopter.com for instructions to order an original manual and to register for email notification updates.

PART NUMBER INDEX
SECTIONS 3 THROUGH 6, 9, 10, AND 11
FIGURES 7-4C, 7-4D, 8-1 THROUGH 8-11, 12-1A THROUGH 12-2B,12-5, 12-6A, AND 12-10

Part Number	Figure	Item
28-12646-15	3-20	–
28-12646-15	3-20A	–
28-12646-15	3-20B	–
28-12646-17	3-20	–
28-12646-17	3-20A	–
28-12646-17	3-20B	–
28-12646-21	3-20	–
28-12647-1	3-20A	200
28-12647-1	3-20B	200
28-12647-3	3-20	200
28-12648-1	3-19	70
28-12649-1	3-19	60
28-12650-1	3-20	–
28-12650-1	3-20B	–
28-12650-11	3-20B	–
28-12650-17	3-20B	–
28-12651-11	3-20B	–
28-12651-13	3-20	–
28-12651-13	3-20A	–
28-12651-13	3-20B	–
28-12652-13	3-20	–
28-12652-13	3-20A	–
28-12652-5	3-20	–
28-12652-5	3-20	–
28-12653-13	3-20	–
28-12653-13	3-20A	–
28-12653-5	3-20	–
28-12654-11	3-7	220
28-12654-13	3-7	230
28-12655-1	3-20B	50
28-12655-3	3-20A	50
28-12655-3	3-20B	50
28-12655-5	3-20	50
28-12655-5	3-20A	50
28-12656-1	3-20B	30
28-12656-3	3-20	30
28-12656-3	3-20A	30
28-12658-11	3-20B	–
28-12659-1	3-20	130
28-12659-13	3-20B	–
28-12659-15	3-20	130
28-12659-15	3-20A	130
28-12659-16	3-20A	140
28-12659-17	3-20	140
28-12659-17	3-20A	140
28-12662-1	3-20	60
28-12662-1	3-20A	60
28-12662-11	3-20B	60
28-12662-13	3-20A	60
28-12662-13	3-20B	60
28-12663-11	3-20B	–
28-12664-11	3-7	240
28-12666-1	3-20B	–
28-12666-1	3-20B	110
28-12666-3	3-20	110
28-12666-3	3-20A	110
28-12666-3	3-20B	110
28-12667-11	3-20	–
28-12667-11	3-20B	–
28-12667-13	3-20B	–
28-12668-11	3-20	–
28-12668-11	3-20A	–
28-12668-11	3-20B	–
28-12668-13	3-20B	–
28-12669-11	3-20B	–
28-12674-1	3-20B	70
28-12675-1	3-20B	10
28-12675-3	3-20A	10
28-12676-1	3-20B	–
28-12676-3	3-20B	–
28-12676-5	3-20B	–
28-12676-7	3-20A	–
28-12676-9	3-20A	–
28-12676-901	3-20	–
28-12677-1	3-20B	160
28-12677-3	3-20B	160

UNCONTROLLED COPY WHEN DOWNLOADED OR PRINTED

Visit www.enstromhelicopter.com for instructions to order an original manual and to register for email notification updates.

PART NUMBER INDEX
SECTIONS 3 THROUGH 6, 9, 10, AND 11
FIGURES 7-4C, 7-4D, 8-1 THROUGH 8-11, 12-1A THROUGH 12-2B,12-5, 12-6A, AND 12-10

Part Number	Figure	Item
28-12678-11	3-20B	–
28-12679-1	3-20B	130
28-12679-3	3-20B	130
28-12681-1	3-20B	80
28-12681-3	3-20B	80
28-12681-5	3-20	80
28-12681-5	3-20A	80
28-12682-11	3-20	90
28-12682-11	3-20A	90
28-12682-11	3-20B	90
28-12682-13	3-20B	–
28-12683-1	3-20	100
28-12683-1	3-20A	100
28-12683-1	3-20B	100
28-12683-11	3-20	–
28-12683-11	3-20A	–
28-12683-11	3-20B	–
28-12683-13	3-20	–
28-12683-13	3-20A	–
28-12683-13	3-20B	–
28-12683-13	3-20B	–
28-12683-15	3-20B	–
28-12683-3	3-20B	–
28-12683-3	3-20B	100
28-12684-11	3-20B	–
28-12684-11	3-20B	–
28-12685-11	3-20B	–
28-12685-13	3-20B	–
28-12686-11	3-20	490
28-12686-11	3-20A	490
28-12686-11	3-20B	490
28-12687-1	3-20	120
28-12687-1	3-20A	120
28-12687-1	3-20B	120
28-12688-1	3-20A	70
28-12688-13	3-20A	–
28-12688-15	3-20A	–
28-12688-17	3-20A	–
28-12688-19	3-20A	–
28-12688-25	3-20A	–
28-12688-29	3-20	–
28-12688-29	3-20A	–
28-12688-3	3-20A	70
28-12688-5	3-20	70
28-12688-5	3-20A	70
28-12689-11	3-20	160
28-12689-11	3-20A	160
28-127000-1	10-1	–
28-127000-11	10-1	3
28-127000-11	10-2	3
28-127001	10-2	–
28-127002-1	10-4	–
28-127002-3	10-3	–
28-127002-5	10-4	–
28-12701-3	10-1	15
28-12701-4	10-1	12
28-12701-4	10-2	13
28-12701-5	10-1	5
28-12701-5	10-2	5
28-12705	10-1	16
28-12705	10-3	19
28-12706	10-1	14
28-12706	10-2	15
28-12706-11	3-5.1	10
28-12714	10-1	9
28-12714	10-2	10
28-12718	10-1	10
28-12718	10-2	11
28-12719	8-5	–
28-12719-11	8-5	590
28-12719-12	8-5	–600
28-127502-1	10-4	340
28-127508-1	10-3	10
28-127508-1	10-4	280
28-127509-1	10-3	5
28-127509-1	10-4	120

UNCONTROLLED COPY WHEN DOWNLOADED OR PRINTED

Visit www.enstromhelicopter.com for instructions to order an original manual and to register for email notification updates.

PART NUMBER INDEX
SECTIONS 3 THROUGH 6, 9, 10, AND 11
FIGURES 7-4C, 7-4D, 8-1 THROUGH 8-11, 12-1A THROUGH 12-2B,12-5, 12-6A, AND 12-10

Part Number	Figure	Item
28-127510-1	10-3	3
28-127510-1	10-4	100
28-127520-11	10-3	2
28-127520-11	10-4	20
28-127520-13	10-3	1
28-127520-13	10-4	10
28-127520-15	10-4	30
28-127520-17	10-2	25
28-127520-17	10-4	360
28-127520-19	10-2	26
28-127520-19	10-4	350
28-127520-25	10-3	16
28-127520-29	10-4	10
28-127521-11	10-3	11
28-127521-11	10-4	290
28-127523-1	10-4	120
28-127524-1	10-4	280
28-12816-1	11-21	350
28-12830-11	11-21	100
28-13005-1	5-6	260
28-13101-1-R	5-6	10
28-13101-5-R	5-6	10
28-13107-13	5-6	210
28-13107-15	5-6	210
28-13117-4	5-7	20
28-13117-5	5-7	30
28-13117-6	5-7	45
28-13117-7	5-7	50
28-13117-8	5-7	35
28-13117-9	5-7	40
28-13120-1	5-6	150
28-13122-1	5-7	10
28-13122-991	5-7	–
28-13129-13	5-4	280
28-13134-5	5-6	180
28-13137-1	5-6	60
28-13137-11	5-6	60
28-13142-1	5-4	180
28-13145-1	12-1A	–190
28-13145-1	4-4	300
28-13148-1	5-6	70
28-13149-1	5-6	80
28-13170-103	5-6	10
28-13170-3-R	5-6	10
28-13170-7-R	5-6	10
28-13170-900	5-6	10
28-13170-903	5-4	240
28-13170-905	5-4	–
28-13170-909	5-6	10
28-13170-9-R	5-6	10
28-13177-1	5-6	100
28-13180-11	5-4	270
28-13181-11	5-4	300
28-13182-1	5-4	330
28-13182-11	5-4	330
28-13184-11	5-4	350
28-132001-11	5-4	100
28-132001-13	5-4	100
28-132005-1	5-3	–
28-132005-11	5-3	490
28-132005-3	5-3	–
28-132006-11	5-3	530
28-132008-11	5-3	380
28-132009-11	5-3	540
28-132010-13	5-4	100
28-132020-901	5-1	–
28-132020-903	5-3	–
28-132020-904	5-3	–
28-132022-1	5-1	–
28-132022-11	5-1	330
28-132022-2	6-11	200
28-132022-3	6-11	200
28-13210-13	5-4	110
28-13211-1	5-4	70
28-13212-1	5-4	30
28-13215-1	5-4	250

UNCONTROLLED COPY WHEN DOWNLOADED OR PRINTED

Visit www.enstromhelicopter.com for instructions to order an original manual and to register for email notification updates.

PART NUMBER INDEX
SECTIONS 3 THROUGH 6, 9, 10, AND 11
FIGURES 7-4C, 7-4D, 8-1 THROUGH 8-11, 12-1A THROUGH 12-2B,12-5, 12-6A, AND 12-10

Part Number	Figure	Item
28-13215-3	5-4	250
28-13227-5	5-4	10
28-13229-1	5-3	10
28-13230-1	5-3	20
28-13231-3	5-4	170
28-13231-4	5-4	170
28-13231-5	5-4	170
28-13231-6	5-4	170
28-13231-7	3-21	60
28-13231-7	5-4	170
28-13232-1	5-6	40
28-13233-1	5-3	70
28-13234-1	5-3	80
28-13238-1	5-3	110
28-13238-1	5-6	30
28-13245-901	5-3	230
28-13246-1	5-3	260
28-13248-1	5-3	250
28-13250-1	5-2	20
28-13250-11	5-2	20
28-13251-1	5-2	30
28-13252-1	5-2	80
28-13253-1	5-2	10
28-13254-1	5-2	40
28-13255-1	5-2	130
28-13256-1	5-2	70
28-13259-4	5-1	60
28-13259-4	5-2	–
28-13260-1	5-1	380
28-13263-1	5-2	150
28-13264-1	5-1	80
28-13265-1	5-1	100
28-13266-1	5-1	160
28-13266-15	5-1	200
28-13267-1	5-1	190
28-13267-11	5-1	210
28-13268-1	5-1	30
28-13269-1	5-1	140
28-13271-1	5-4	190
28-13273-1	5-4	100
28-13273-13	5-4	100
28-13274-1	5-1	180
28-13276-1	5-5	320
28-13277-1	5-1	40
28-13278-1	5-3	310
28-13279-1	5-2	120
28-13280-3	5-1	230
28-13280-4	5-1	240
28-13281-3	5-4	420
28-13281-4	5-4	420
28-13281-5	5-4	420
28-13282-3	5-3	290
28-13282-4	5-3	290
28-13282-5	5-3	290
28-13283-1	5-1	90
28-13284-1	5-1	430
28-13285-4	5-5	340
28-13285-5	5-1	250
28-13285-6	5-1	50
28-13285-7	5-1	170
28-13292-1	5-3	50
28-13292-4	5-3	60
28-13296-1	5-3	280
28-13297-1	5-3	240
28-13299-1	5-3	420
28-13299-3	5-3	420
28-13300-13	5-4	100
28-13302-1	5-4	430
28-13302-11	5-4	430
28-13302-13	5-4	430
28-13303-11	5-4	300
28-13305-1	5-4	40
28-13306-1	5-4	150
28-13313-1	5-3	140
28-13316-1	5-3	170
28-13316-913	5-3	180

UNCONTROLLED COPY WHEN DOWNLOADED OR PRINTED

Visit www.enstromhelicopter.com for instructions to order an original manual and to register for email notification updates.

PART NUMBER INDEX
SECTIONS 3 THROUGH 6, 9, 10, AND 11
FIGURES 7-4C, 7-4D, 8-1 THROUGH 8-11, 12-1A THROUGH 12-2B,12-5, 12-6A, AND 12-10

Part Number	Figure	Item
28-13318-1	5-3	340
28-13318-7	5-3	340
28-13319-1	5-4	60
28-13321-11	5-4	430
28-13321-13	5-4	430
28-13321-15	5-4	430
28-13321-17	5-4	430
28-13322-11	5-4	300
28-13323-11	5-4	280
28-13401-4	5-4	200
28-135003-1	12-1A	30
28-135003-11	12-1A	30
28-13511-11	12-1A	180
28-13515-3	12-1A	50
28-13525-5	12-1A	–10
28-13525-7	12-1A	10A
28-13531-11	12-1A	140
28-13532-11	12-1A	160
28-13600-3	12-1B	60A
28-13600-4	12-1B	60B
28-13600-5	12-1B	60C
28-13600-6	12-1B	50A
28-13600-7	12-1B	50B
28-13600-8	12-1B	50C
28-13605-3	12-2A	60
28-13605-4	12-2A	60
28-13605-5	12-2A	60
28-13605-6	12-2A	60
28-13605-7	12-2A	60
28-13605-8	12-2A	60
28-13606-1	12-2A	40
28-13607-1	12-1B	40
28-13611-1	12-2A	10
28-13613-1	12-1B	20
28-13614-1	12-1B	30
28-13614-1	5-6	248
28-13617-902	12-2A	–5
28-13617-903	12-1B	–5
28-13617-905	12-1B	–5A
28-13618-1	12-1B	10
28-13619-1	12-1B	150
28-13621-11	12-1B	160
28-13621-13	12-1B	160
28-13623-11	12-1B	50A
28-13623-13	12-1B	50B
28-13623-17	12-1B	50C
28-13623-25	12-1B	60A
28-13623-27	12-1B	60B
28-13623-29	12-1B	60C
28-13623-31	12-1B	60D
28-14004-1	4-1	380
28-14006-11	4-1	280
28-14006-13	4-1	280
28-14006-15	4-1	280
28-14006-17	4-1	280
28-14006-19	4-1	280
28-14006-3	4-1	280
28-14006-5	4-1	280
28-14006-7	4-1	280
28-14006-9	4-1	280
28-14007-1	4-2	250
28-14007-3	4-2	250
28-14008-1	4-1	370
28-14009-1	4-1	350
28-14009-2	4-1	350
28-14009-3	4-1	350
28-14009-5	4-1	350
28-14019-10	4-3	40
28-14019-2	4-3	40
28-14019-3	4-3	40
28-14019-5	4-3	40
28-14019-6	4-3	40
28-14100-9	4-2	240
28-14109-1	4-2	380
28-14110-1	4-2	–
28-14110-2	4-2	–

UNCONTROLLED COPY WHEN DOWNLOADED OR PRINTED

Visit www.enstromhelicopter.com for instructions to order an original manual and to register for email notification updates.

PART NUMBER INDEX
SECTIONS 3 THROUGH 6, 9, 10, AND 11
FIGURES 7-4C, 7-4D, 8-1 THROUGH 8-11, 12-1A THROUGH 12-2B,12-5, 12-6A, AND 12-10

Part Number	Figure	Item
28-14110-3	4-2	–
28-14117-1	4-1	200
28-14117-11	4-1	200
28-14119-11	4-2	242
28-14141-913	4-2	370
28-14202-1	4-1	40
28-14207-1	8-4	30
28-14207-101	8-4	30
28-14207-7	8-4	30
28-14219-3	4-1	–
28-14219-7	4-1	–
28-14219-901	4-1	–
28-14223-1	4-1	100
28-14224-1	4-1	70
28-14224-3	4-1	130
28-14227-1	4-1	180
28-14227-11	4-3	10
28-14228-1	4-1	170
28-14228-15	4-1	170
28-14231-1	4-2	50
28-14233-2	4-3	60
28-14233-3	4-3	60
28-14234-9	4-2	–
28-14234-901	4-2	–
28-14234-909	4-2	–
28-14235-1	4-1	360
28-14236-1	4-1	220
28-14236-1	4-1	270
28-14236-1	4-3	30
28-14239-1	4-2	210
28-14239-11	4-2	–
28-14239-3	4-2	–
28-14239-5	4-2	210
28-14240-1	4-2	20
28-14244-1	4-1	80
28-14248-1	5-3	510
28-14250-1	4-1	–
28-14250-1	8-4	40
28-14250-3	8-4	50
28-14251-1	4-1	230
28-14251-2	4-1	240
28-14256-1	4-1	290
28-14257-1	4-1	300
28-14259-1	4-3	150
28-14259-3	8-4	160
28-14259-3	8-5	480
28-14261-1	4-2	100
28-14262-1	8-4	80
28-14265-3	4-4	100
28-14268-1	4-4	–
28-14270-1	4-2	–
28-14270-1	11-21	360
28-14276-1	4-4	20
28-14277-1	4-4	30
28-14278-1	4-2	330
28-14278-1	8-4	10
28-14279-1	4-2	150
28-14279-3	4-2	150
28-14280-1	4-1	90
28-14280-3	4-1	90
28-14280-5	4-1	90
28-14281-1R	4-1	120
28-14281-3	4-1	120
28-14281-5	4-1	120
28-14282-11	4-2	10
28-14282-13	4-2	10
28-14283-1	4-2	280
28-14290-3	4-1	110
28-14290-5	4-1	110
28-14290-7	4-1	110
28-14290-9	4-1	110
28-14293-11	4-2	180
28-14293-13	4-2	180
28-14293-7	4-2	180
28-14293-9	4-2	180
28-14311-1	4-2	70

UNCONTROLLED COPY WHEN DOWNLOADED OR PRINTED

Visit www.enstromhelicopter.com for instructions to order an original manual and to register for email notification updates.

PART NUMBER INDEX
SECTIONS 3 THROUGH 6, 9, 10, AND 11
FIGURES 7-4C, 7-4D, 8-1 THROUGH 8-11, 12-1A THROUGH 12-2B,12-5, 12-6A, AND 12-10

Part Number	Figure	Item
28-14313-1	4-2	130
28-14320-15	4-2	170
28-14335-1	4-2	190
28-14356-5	4-4	121
28-14357-3	4-4	10
28-14357-5	4-4	10
28-14358-3	4-4	50
28-14358-4	4-4	120
28-14359-15	4-4	20
28-14359-17	4-4	30
28-14366-1	4-4	210
28-14367-7	4-4	220
28-14368-1	6-11	280
28-14368-2	4-4	230
28-14369-1	4-4	270
28-14370-15	4-4	60
28-14370-17	4-4	60
28-14371-1	4-4	80
28-14372-1	4-4	70
28-14372-3	4-4	70
28-14374-13	11-21	370
28-14374-15	4-4	290
28-14374-15	11-21	370
28-14375-101	4-4	–
28-14375-105	4-4	–
28-14375-7	4-4	–
28-14375-905	4-4	–
28-14375-906	4-4	–
28-14381-901	4-2.1	100
28-14381-902	4-2.1	60
28-14381-903	4-2	–
28-14382-19	4-2.1	160
28-14382-21	4-2.1	90
28-14383-13	4-2.1	-70
28-14384-13	4-2.1	-120
28-14385-15	4-2.1	10
28-14386-5	4-2.1	40
28-14389-11	4-2.1	-110
28-14389-13	4-2.1	-80
28-150001-5	12-10	200
28-150044-5	12-10	210
28-150055-1	12-10	150
28-150055-13	12-10	150
28-150060-11	12-10	120
28-150063-11	12-10	130
28-150067-15	12-10	20
28-150074-13	12-10	10
28-150076-1	12-10	90
28-150076-13	12-10	70
28-150076-15	12-10	40
28-150076-17	12-10	30
28-150076-19	12-10	60
28-150076-21	12-10	90
28-150077-1	12-10	–
28-150077-11	12-10	–
28-150078-10	12-10	80
28-150078-12	12-10	80
28-150078-13	12-10	80
28-150078-15	12-10	80
28-150079-1	12-10	–
28-150079-901	12-10	–
28-15030-1	12-10	310
28-15033-5	12-10	190
28-16006-1	3-10	320
28-16011-1	3-11	500
28-16021-11	3-11	370
28-16021-11	3-11	370
28-16022-11	3-11	490
28-16022-11	3-13	10
28-16024	8-3	–
28-16024	8-5	–
28-16024	8-6	–
28-16024	8-6A	–
28-16024	8-8	–
28-16024-911	8-5A	–
28-16024-912	8-5A	–

UNCONTROLLED COPY WHEN DOWNLOADED OR PRINTED

Visit www.enstromhelicopter.com for instructions to order an original manual and to register for email notification updates.

PART NUMBER INDEX
SECTIONS 3 THROUGH 6, 9, 10, AND 11
FIGURES 7-4C, 7-4D, 8-1 THROUGH 8-11, 12-1A THROUGH 12-2B,12-5, 12-6A, AND 12-10

Part Number	Figure	Item
28-16026-1	8-5	–180A
28-16026-3	8-5	–180B
28-16026-5	8-5	–180C
28-16026-7	8-5	–180D
28-16026-9	8-5	–180E
28-16030-1	6-14	–
28-16030-3	6-14	–
28-16043-13	8-3A	280
28-16043-15	8-3A	300
28-16043-19	8-3A	140
28-16056-1	8-5A	50
28-16057-1	8-5A	110
28-16069-3	9-4	–
28-16069-5	9-3	–
28-16070-101	9-1	2B
28-16070-101	9-4	120
28-16070-103	9-4	120
28-16070-105	9-4	125
28-16070-5	9-1	2C
28-16070-5	9-3	520
28-16070-7	9-1	2B
28-16070-7	9-4	120
28-16070-9	9-1	2C
28-16070-9	9-3	520
28-16074-11	3-11	280
28-16080-901	3-11	–
28-16087-11	3-11	290
28-16087-13	3-11	390
28-16088-13	3-11	50
28-16096-1	3-11	10
28-16096-3	3-11	10
28-16098-11	3-11	170
28-16099-1	9-1	2D
28-16101-101	8-1	–
28-16101-105	8-4	–
28-16101-107	8-3A	–
28-16103-1	8-3A	50
28-16105-1	8-3A	30
28-16106-2	8-3A	70
28-16108-11	8-3A	90
28-16108-2	8-3A	90
28-16109-1	8-3A	230
28-16109-11	8-3A	230
28-16109-13	8-3A	240
28-16110-1	8-3A	160
28-16112-15	8-3A	190
28-16112-17	8-3A	190
28-16113-1	8-3A	210
28-16116-1	8-1	220
28-16116-11	8-1	220
28-16119-3	8-1	80
28-16119-5	8-1	80
28-16123-1	8-1	10
28-16123-11	8-1	10
28-16124-1	8-2	40
28-16125-3	8-3A	110
28-16125-4	8-3A	120
28-16125-5	8-3A	130
28-16126-1	8-3A	200
28-16129-2	8-2	30
28-16131-1	8-3A	220
28-16131-11	8-3A	220
28-16132-1	8-3A	–
28-16132-3	8-3A	340
28-16132-4	8-3A	330
28-16133-1	8-3A	350
28-16136-1	8-5	–
28-16136-101	8-5	–
28-16136-103	8-5	–
28-16136-5	8-5	–
28-16143-1	8-3A	380
28-16143-3	8-3A	380
28-16145-1	8-5	220
28-16148-1	8-5A	40
28-16148-3	8-5A	40
28-16150-1	8-5A	30

UNCONTROLLED COPY WHEN DOWNLOADED OR PRINTED

Visit www.enstromhelicopter.com for instructions to order an original manual and to register for email notification updates.

PART NUMBER INDEX
SECTIONS 3 THROUGH 6, 9, 10, AND 11
FIGURES 7-4C, 7-4D, 8-1 THROUGH 8-11, 12-1A THROUGH 12-2B,12-5, 12-6A, AND 12-10

Part Number	Figure	Item
28-16155-4	8-5	120
28-16155-4	8-6A	100
28-16155-5	8-5	90
28-16156-1	8-3	120
28-16156-1	8-5	30
28-16157-3	8-5	400
28-16157-4	8-5	500
28-16158-1	8-5	70
28-16159-1	8-5	80
28-16160-1	8-5	110
28-16160-7	8-5	110
28-16160-7	8-6A	70
28-16168-1	3-10	160
28-16183-1	8-5A	10
28-16183-901	8-5A	10
28-16190-1	8-5	50
28-16191-1	8-5	60
28-16192-1	8-5	100
28-16197-1	8-3	160
28-16197-1	8-5	10
28-16198-1	8-3	130
28-16198-1	8-5	40
28-162004-11	8-11	260A
28-16201-1	8-3A	470
28-16201-1	8-9	330
28-16201-1	8-10	330
28-16202-1	8-5	540
28-16203-1	8-11	170
28-16203-1	8-3A	480
28-16203-1	8-4	60
28-16203-1	8-8	80
28-162040-11	8-7	40
28-162041-1	8-7	–10
28-162041-2	8-7	–10
28-162042-11	8-7	30
28-162043-1	8-7	10
28-162043-1	8-9	–
28-162043-3	8-9	–
28-16205-1	8-5	290
28-16205-5	8-5	290
28-16206-11	8-4	20
28-16209-1	8-5	490
28-16209-11	8-5	–490A
28-16210-3	8-5	530
28-16211-1	8-5	390
28-16211-1	8-8	130
28-16215-1	3-10	360
28-16215-1	11-21	380
28-16217-11	8-5	360
28-16217-13	8-5	–360A
28-16217-15	8-5	–360B
28-16217-17	8-5	–360C
28-16217-19	8-5	–360D
28-16217-21	8-5	–360E
28-16217-23	8-5	–360F
28-16218-1	8-5	20
28-16219-1	8-3	140
28-16220-1	8-5	300
28-16220-5	8-5	300
28-16222-1	8-11	260
28-16223-19	8-1	210
28-16224-5	8-1	230
28-16225-19	8-1	240
28-16226-5	8-1	200
28-16227-3	8-1	160
28-16228-1	8-1	50
28-16229-13	8-11	250
28-16229-15	8-11	250
28-16230-1	8-11	240
28-16231-1	8-11	280
28-16232-1	8-11	30
28-16233-1	8-11	180
28-16234-1	8-11	80
28-16235-1	8-11	120
28-16235-11	8-11	120
28-16236-1	8-11	220

UNCONTROLLED COPY WHEN DOWNLOADED OR PRINTED

Visit www.enstromhelicopter.com for instructions to order an original manual and to register for email notification updates.

PART NUMBER INDEX
SECTIONS 3 THROUGH 6, 9, 10, AND 11
FIGURES 7-4C, 7-4D, 8-1 THROUGH 8-11, 12-1A THROUGH 12-2B,12-5, 12-6A, AND 12-10

Part Number	Figure	Item
28-16236-15	8-11	220
28-16236-17	8-11	220
28-16237-1	8-11	230
28-16237-11	8-11	230
28-16237-13	8-11	230
28-16238-3	8-11	290
28-16238-5	8-11	290
28-16238-7	8-11	290
28-16239-1	8-11	40
28-16239-101	8-11	40
28-16239-5	8-11	40
28-16239-9	8-11	40
28-16242-1	8-11	–320
28-16242-5	8-11	–350
28-16242-7	8-11	–340
28-16242-901	8-11	–310
28-16242-907	8-11	–330
28-16253-1	8-3A	460
28-16253-101	8-3A	420
28-16253-103	8-3A	420
28-16253-105	8-3A	460
28-16253-6	8-3A	450
28-16253-8	8-3A	450
28-16258-1	8-11	200
28-16259-1	8-3A	20
28-16260-1	8-3A	10
28-16263-5	8-1	170
28-16264-1	8-3A	40
28-16283-2	8-6	80
28-16283-2	8-6A	20
28-16283-4	8-5	340
28-16283-4	8-6	20
28-16283-4	8-7	20
28-16284-1	8-5	330
28-16284-1	8-6	30
28-16284-1	8-6A	90
28-16290-2	8-5	320
28-16290-2	8-6	70
28-16290-2	8-6A	10
28-16291-1	8-6	90
28-16291-1	8-6A	30
28-16292-11	8-6A	–
28-16293-2	8-6	–
28-16293-2	8-6A	–
28-16294-1	8-6	10
28-16294-1	8-6A	80
28-16294-13	8-6A	80
28-16295-1	8-6	–
28-16296-11	11-21	390
28-16300	12-6A	–5
28-16301-3	12-6B	10A
28-16301-4	12-6A	10
28-16301-4	12-6B	10B
28-16301-7	12-6A	10A
28-16301-7	12-6B	10C
28-16302-1	12-6A	80
28-16307-1	12-6A	110
28-16308-1	12-6A	40
28-16308-1	12-6A	180
28-16308-1	12-6B	210
28-16309-1	12-6A	170
28-16310-2	12-6A	30
28-16310-2	12-6B	200
28-16311-1	12-6A	20
28-16311-1	12-6A	165
28-16311-1	12-6B	–30
28-16311-1	12-6B	–170
28-16311-1	12-6B	–190
28-16311-1	5-3	350
28-16313-1	12-6A	160
28-16313-1	12-6B	150
28-16314-1	12-6A	230
28-16314-1	12-6B	180
28-16315-1R	12-6A	230A
28-16317-1R	12-6A	160A
28-16319-1	12-6A	210

UNCONTROLLED COPY WHEN DOWNLOADED OR PRINTED

Visit www.enstromhelicopter.com for instructions to order an original manual and to register for email notification updates.

PART NUMBER INDEX
SECTIONS 3 THROUGH 6, 9, 10, AND 11
FIGURES 7-4C, 7-4D, 8-1 THROUGH 8-11, 12-1A THROUGH 12-2B,12-5, 12-6A, AND 12-10

Part Number	Figure	Item
28-16319-1	12-6B	–160
28-16320-1	12-6A	120
28-16324	12-6A	110A
28-16325-2	12-6A	120A
28-16331-1	12-6A	10B
28-16331-1	12-6B	20
28-16336-11	8-3A	440
28-16336-11	8-4	60
28-16345-1	12-5	130
28-16348-1	9-5	20
28-16353-3	12-5	50
28-16353-5	12-5	30
28-16361-1	8-1	20
28-16361-1	8-3	10
28-16374-1	12-6B	140
28-16380	12-6B	–5A
28-16386-1	8-3A	80
28-16387-1	8-1	60
28-16389-2	8-3A	150
28-16390-11	8-5A	–20
28-16391-1	12-5	120B
28-16391-3	12-5	120A
28-16391-5	12-5	120
28-16392-13	12-5	180
28-16392-13	12-6B	60
28-16394-2	12-6B	40
28-16395-1	12-6B	120
28-16396-2	12-6B	10
28-16397-11	12-6B	50
28-16398	12-5	–5
28-16398	12-6B	–5
28-16398-901	12-5	120C
28-16399-13	12-1A	220
28-164001-1	3-10	70
28-16401-1	3-10	220
28-16401-5	3-10	220
28-16403-1	3-10	290
28-16404-1	3-10	300
28-164043-11	3-10	340
28-164043-11	3-14	–
28-164043-11	3-15	–
28-16405-1	3-10	70
28-16407-1	3-10	200
28-16409-13	3-11	60
28-16409-15	3-11	60
28-16421-1	3-11	40
28-16447-1	3-10	20
28-16449-1	3-10	350
28-16449-1	11-21	400
28-16473-1	3-11	220
28-16473-1	3-11	440
28-16476-2	3-11	150
28-16476-3	3-11	250
28-16477-1	3-11	240
28-16477-2	3-11	300
28-16478-3	3-11	–
28-16478-5	3-11	–
28-16479-13	3-11	110
28-16481-5	3-11	–
28-16482-13	3-11	210
28-16484-11	3-11	120
28-16490-101	3-15	70
28-16493-11	3-13	10
28-16493-13	3-13	10
28-16497-1	3-13	20
28-16498-101	3-11	450
28-16498-101	3-13	80
28-16498-7	3-13	80
28-16498-9	3-11	430
28-16498-9	3-11	450
28-16499-9	3-12	100
28-16499-9	3-12	100
28-16504-1	5-5	130
28-16505-1	5-5	200
28-16506-1	5-5	220
28-16515-1	5-5	20

UNCONTROLLED COPY WHEN DOWNLOADED OR PRINTED

Visit www.enstromhelicopter.com for instructions to order an original manual and to register for email notification updates.

PART NUMBER INDEX
SECTIONS 3 THROUGH 6, 9, 10, AND 11
FIGURES 7-4C, 7-4D, 8-1 THROUGH 8-11, 12-1A THROUGH 12-2B,12-5, 12-6A, AND 12-10

Part Number	Figure	Item
28-16515-3	5-5	30
28-16516-1	5-5	10
28-16516-13	5-5	10
28-16518-1	5-5	160
28-16519-1	5-5	40
28-16520-1	5-1	270
28-16520-1	5-5	50
28-16521-11	5-5	80
28-16522-1	5-5	90
28-16523-1	5-5	–
28-16524-3	5-6	–
28-16524-3	8-1	180
28-16524-4	5-6	–
28-16524-4	8-1	180
28-16524-5	5-6	–
28-16524-5	8-1	180
28-16524-6	5-6	–
28-16524-6	8-1	180
28-16524-7	5-6	–
28-16524-7	8-1	180
28-16524-8	5-6	–
28-16524-8	8-1	180
28-16525-1	5-5	360
28-16525-1	11-21	410
28-16526-1	5-5	370
28-16526-1	11-21	420
28-16537-11	5-5	380
28-16537-13	5-5	390
28-16542-11	5-5	240
28-16600-10	8-8	20
28-16600-101	8-8	90
28-16600-103	8-8	10
28-16600-105	8-8	90
28-16600-107	8-8	10
28-16600-109	8-8	100
28-16600-111	8-8	20
28-16600-113	8-8	90
28-16600-113	8-10	–
28-16600-115	8-8	10
28-16600-115	8-9	–
28-16600-117	8-8	100
28-16600-117	8-10	–
28-16600-119	8-8	20
28-16600-119	8-9	–
28-16600-7	8-8	100
28-16600-8	8-8	20
28-16600-9	8-8	100
28-16601-1	8-9	420
28-16601-1	8-10	420
28-16603-1	8-10	440
28-16603-15	8-10	430
28-16604-1	8-9	410
28-16604-1	8-10	410
28-16607-1	8-9	270
28-16607-1	8-10	270
28-16608-1	8-9	300
28-16608-1	8-10	300
28-16609-1	8-9	200
28-16609-1	8-10	200
28-16610-1	8-9	180
28-16610-1	8-10	180
28-16611-1	8-9	360
28-16611-1	8-10	360
28-16611-13	8-9	360
28-16611-13	8-10	360
28-16611-15	8-9	360
28-16611-15	8-10	360
28-16612-5	8-9	–
28-16612-5	8-10	–
28-16613-1	8-9	350
28-16613-1	8-10	350
28-16613-3	8-9	350
28-16613-3	8-10	350
28-16614-1	8-9	–10
28-16614-1	8-10	–10
28-16614-3	8-9	10

UNCONTROLLED COPY WHEN DOWNLOADED OR PRINTED

Visit www.enstromhelicopter.com for instructions to order an original manual and to register for email notification updates.

PART NUMBER INDEX
SECTIONS 3 THROUGH 6, 9, 10, AND 11
FIGURES 7-4C, 7-4D, 8-1 THROUGH 8-11, 12-1A THROUGH 12-2B,12-5, 12-6A, AND 12-10

Part Number	Figure	Item
28-16614-3	8-10	10
28-16614-5	8-9	10
28-16614-5	8-10	10
28-16616-1	8-10	320
28-16616-5	8-9	320
28-16616-7	8-9	320
28-16616-9	8-10	320
28-16617-1	8-10	–
28-16617-2	8-9	–
28-16618-101	8-10	310
28-16618-103	8-7	–
28-16618-103	8-9	310
28-16618-105	8-10	310
28-16618-6	8-9	310
28-16618-7	8-10	310
28-16618-9	8-9	310
28-16619-1	8-9	160
28-16619-1	8-10	160
28-16620-1	8-10	–
28-16620-2	8-9	–
28-16621-1	8-9	–110A
28-16621-1	8-10	–110A
28-16623-1	8-10	250
28-16624-1	8-9	–40
28-16624-1	8-10	–40
28-16624-11	8-9	40
28-16624-11	8-10	40
28-16624-3	8-9	40
28-16624-3	8-10	40
28-16625-1	8-8	50
28-16626-1	8-9	390
28-16628-1	8-9	340
28-16628-1	8-10	340
28-16630-1	8-10	220
28-16630-2	8-9	220
28-16630-3	8-10	220
28-16630-4	8-9	220
28-16632-1	8-9	260
28-16632-1	8-10	260
28-16633-1	8-9	140
28-16633-1	8-10	140
28-16635-1	8-9	250
28-16636-3	8-9	–
28-16636-3	8-10	–
28-16636-5	8-9	–
28-16636-5	8-10	–
28-16637-11	8-6A	–
28-16650-11	6-11	230
28-17005-1	11-21	430
28-17164-13	11-21	110
28-17302-3	3-2	160
28-17308-1	12-10	230
28-17313-1	6-5	70
28-17314-1	6-5	80
28-17316-1	6-5	90
28-17318-1	11-21	440
28-17331-1	11-21	450
28-17331-13	11-21	460
28-17331-15	11-21	450
28-180004-5	11-6	360
28-180010-11	12-2B	40A
28-180012-1	11-21	1100
28-180014-1	11-8	–
28-180014-1	11-7	950
28-180018-1	11-21	1110
28-180020-11	11-8	175
28-180020-11	11-9	55
28-180020-11	11-6	110
28-180020-11	11-7	50
28-180021-1	11-21	1120
28-180022-1	11-21	1130
28-180023-1	11-21	1140
28-180030-1	11-21	1150
28-180045-11	11-21	1160
28-180045-13	11-21	1160
28-180046-11	11-21	1170

UNCONTROLLED COPY WHEN DOWNLOADED OR PRINTED

Visit www.enstromhelicopter.com for instructions to order an original manual and to register for email notification updates.

PART NUMBER INDEX
SECTIONS 3 THROUGH 6, 9, 10, AND 11
FIGURES 7-4C, 7-4D, 8-1 THROUGH 8-11, 12-1A THROUGH 12-2B,12-5, 12-6A, AND 12-10

Part Number	Figure	Item
28-180046-13	11-21	1170
28-180047-11	11-21	1180
28-180047-13	11-21	1180
28-180048-11	11-21	1190
28-180048-13	11-21	1190
28-180049-11	11-20	10
28-180050-1	11-20	100
28-180050-101	11-20	–100E
28-180050-103	11-20	–100F
28-180050-105	11-20	–100G
28-180050-107	11-20	–100H
28-180050-109	11-20	–100I
28-180050-11	11-20	–100E
28-180050-111	11-20	-100J
28-180050-13	11-20	–100F
28-180050-15	11-20	–100G
28-180050-17	11-20	–100H
28-180050-3	11-20	–100A
28-180050-5	11-20	–100B
28-180050-7	11-20	–100C
28-180050-9	11-20	–100D
28-18005-1	11-21	470
28-180051-1	11-20	–
28-180051-101	11-20	–
28-180051-103	11-20	–
28-180051-105	11-20	–
28-180051-107	11-20	–
28-180051-3	11-20	–
28-180051-5	11-20	–
28-180051-7	11-20	–
28-180051-9	11-20	–
28-180052-11	11-21	1200
28-180052-13	11-21	1200
28-180053-11	11-21	1210
28-180053-13	11-21	1210
28-180054-11	11-21	1220
28-180054-13	11-21	1220
28-180055-11	11-21	1230
28-180055-13	11-21	1230
28-180056-11	11-21	1240
28-180056-13	11-21	1240
28-180057-11	11-21	1250
28-180057-13	11-21	1250
28-18006-1	11-21	480
28-180067-1	11-20	150
28-180067-101	11-20	–150E
28-180067-103	11-20	–150F
28-180067-105	11-20	–150G
28-180067-107	11-20	–150H
28-180067-109	11-20	–150I
28-180067-201	11-20	–150J
28-180067-203	11-20	–150K
28-180067-205	11-20	–150L
28-180067-207	11-20	–150M
28-180067-209	11-20	–150N
28-180067-211	11-20	–150O
28-180067-213	11-20	–150P
28-180067-215	11-20	–150Q
28-180067-217	11-20	–150R
28-180067-219	11-20	–150S
28-180067-3	11-20	–150A
28-180067-5	11-20	–150B
28-180067-7	11-20	–150C
28-180067-9	11-20	–150D
28-18007-1	11-21	490
28-18009-11	11-21	210
28-18009-15	11-21	120
28-18011-1	11-21	500
28-18012-1	11-21	510
28-18013-1	11-21	520
28-18014-1	11-21	530
28-18015-1	11-21	540
28-18016-1	11-21	550
28-18020-1	11-18	–
28-18020-1	12-2B	–10
28-18020-3	12-2B	–10A

UNCONTROLLED COPY WHEN DOWNLOADED OR PRINTED

Visit www.enstromhelicopter.com for instructions to order an original manual and to register for email notification updates.

PART NUMBER INDEX
SECTIONS 3 THROUGH 6, 9, 10, AND 11
FIGURES 7-4C, 7-4D, 8-1 THROUGH 8-11, 12-1A THROUGH 12-2B,12-5, 12-6A, AND 12-10

Part Number	Figure	Item
28-18020-5	11-18	–
28-18020-5	12-2B	–130
28-18020-7	11-18	–
28-18020-7	12-2B	–240
28-18024-1	12-2B	170
28-18024-5	11-18	100
28-18024-5	12-2B	170
28-18026-1	12-2B	230
28-18026-3	11-18	120
28-18026-3	12-2B	230
28-18027-1	11-18	85
28-18027-1	12-2B	40
28-18028-1	11-18	20
28-18028-1	12-2B	250
28-18030-1	11-18	90
28-18030-1	12-2B	210
28-18031-1	12-2B	30
28-18031-3	11-15	75
28-18031-3	12-2B	30
28-18032-1	11-2	–
28-18033-1	11-8	425
28-18033-1	11-9	335
28-18033-1	11-7	890
28-18033-1	11-14	100
28-18033-11	11-15	75
28-18034-1	11-18	105
28-18034-1	12-2B	200
28-18035	11-1	–
28-18036	11-1	110
28-18036-10	11-1	120
28-18036-10	11-4	–
28-18036-10	11-5	–
28-18036-9	11-1	370
28-18036-9	11-3	270
28-18036-9	11-5	–
28-18036--9	11-2	270
28-18037-1	11-21	560
28-18037-2	11-21	570
28-18037-3	11-21	580
28-18043	11-2	240
28-18043-1	11-21	590
28-18048-1	11-21	600
28-18049	11-1	360
28-18049	11-2	260
28-18050	11-1	–
28-18050	11-2	–
28-18051	11-1	350
28-18051-3	11-2	250
28-18052-1	11-6	450
28-18052-1	11-21	610
28-18053-1	11-6	520
28-18053-1	11-21	620
28-18060-11	11-8	25
28-18060-11	11-9	30
28-18060-11	11-7	130
28-18060-13	11-8	105
28-18060-13	11-9	35
28-18060-13	11-7	130A
28-18060-15	11-8	100
28-18060-15	11-9	75
28-18060-15	11-7	130B
28-18061-1	11-8	330
28-18061-1	11-9	260
28-18061-1	11-7	720A
28-18061-1	11-12	20
28-18061-1	11-13	170
28-18061-1	11-13	200
28-18061-1	11-13	210
28-18061-1	11-13	220
28-18061-3	11-7	–720
28-18069-15	11-7	470A
28-18069-17	11-7	470C
28-18069-17	11-7	490
28-18069-19	11-5	–
28-18069-21	11-5	–
28-18069-31	11-8	220

UNCONTROLLED COPY WHEN DOWNLOADED OR PRINTED

Visit www.enstromhelicopter.com for instructions to order an original manual and to register for email notification updates.

PART NUMBER INDEX
SECTIONS 3 THROUGH 6, 9, 10, AND 11
FIGURES 7-4C, 7-4D, 8-1 THROUGH 8-11, 12-1A THROUGH 12-2B,12-5, 12-6A, AND 12-10

Part Number	Figure	Item
28-18069-31	11-7	–470
28-18069-33	11-8	235
28-18069-33	11-7	–470B
28-18075-1	3-10	350
28-18081-11	6-3	–
28-18081-11	11-6	200
28-18081-11	11-21	630
28-18082-1	11-3	–
28-18082-9	11-5	20
28-18082-9	11-6	320
28-18084-1	11-8	–
28-18084-5	11-5	–
28-18087-1	11-21	640
28-18088-1	11-21	650
28-18088-2	11-21	660
28-18091-1	11-5	–
28-18091-101	11-5	–
28-18091-103	11-5	–
28-18091-105	11-5	–
28-18091-107	11-5	–
28-18091-109	11-5	–
28-18091-111	11-5	–
28-18091-113	11-5	–
28-18091-121	11-6	–490A
28-18091-123	11-6	420
28-18091-131	11-5	–
28-18091-133	11-5	–
28-18091-3	11-5	–
28-18091-5	11-5	–
28-18091-5	11-6	490
28-18092-11	11-21	670
28-18095-1	11-5	300
28-18095-3	11-5	300A
28-18095-6	11-5	300B
28-18099-101	11-5	–
28-18099-111	11-5	–
28-18099-119	11-5	–
28-18099-125	11-5	–
28-18099-147	11-8	–
28-18099-149	11-7	–
28-18099-157	11-7	–
28-18099-159	11-8	–
28-18099-161	11-7	–
28-18099-165	11-7	–
28-18099-169	11-7	–
28-18099-171	11-9	–
28-18099-173	11-9	–
28-18099-3	11-6	–
28-18099-7	11-6	–
28-18100-11	11-21	680
28-181001-11	3-22	480
28-181001-11	3-23	500
28-181001-3	3-23	500
28-181002-1	3-22	510
28-181002-1	3-23	530
28-181005-1	11-6	210
28-181005-13	11-16	140
28-181006-11	3-3	140
28-181007-1	3-3	120
28-181007-3	3-3	120
28-181007-5	3-3	120
28-181008-	3-20	–
28-181008-	3-20A	–
28-181008-	3-20B	–
28-18101-11	11-8	145
28-18101-11	11-7	370
28-18103-3	3-22	480
28-18103-3	11-10	130
28-18103-4	3-22	480
28-18103-4	11-11	10
28-18103-4	11-11	140
28-18103-5	3-22	510
28-18103-5	11-10	140
28-18103-6	11-10	150
28-18103-7	11-10	160
28-18103-7	11-11	–140A

UNCONTROLLED COPY WHEN DOWNLOADED OR PRINTED

Visit www.enstromhelicopter.com for instructions to order an original manual and to register for email notification updates.

PART NUMBER INDEX
SECTIONS 3 THROUGH 6, 9, 10, AND 11
FIGURES 7-4C, 7-4D, 8-1 THROUGH 8-11, 12-1A THROUGH 12-2B,12-5, 12-6A, AND 12-10

Part Number	Figure	Item
28-18104-3	11-14	30
28-18104-4	11-14	40
28-18104-5	11-14	50
28-18104-6	11-14	60
28-18104-7	11-14	70
28-18104-903	11-12	110
28-18104-903	11-13	10
28-18104-904	11-12	90
28-18104-904	11-13	20
28-18104-905	11-12	100
28-18104-905	11-13	30
28-18104-906	11-12	80
28-18104-906	11-13	40
28-18104-907	11-12	60
28-18104-907	11-13	50
28-18105-11	11-21	130
28-18105-13	11-21	690
28-18107-1	11-21	700
28-18108-1	11-21	710
28-18112-1	11-11	50
28-18113-1	11-11	30
28-18143-11	6-11	260
28-18153-105	11-7	310B
28-18153-107	11-7	310
28-18153-109	11-8	85
28-18153-109	11-7	–310A
28-18156-1	11-6	20
28-18156-3	11-6	–20A
28-18158-1	9-3	–
28-18158-1	9-4	–
28-18158-3	9-3	–
28-18158-3	9-4	–
28-18159-11	9-3	–
28-18159-11	9-4	–
28-18159-13	9-3	–
28-18159-13	9-4	–
28-18161-11	9-3	–
28-18161-11	9-4	–
28-18161-15	9-3	–
28-18161-15	9-4	–
28-18161-17	9-4	–
28-18161-19	9-4	–
28-18162-13	9-3	–
28-18162-13	9-3	–
28-18162-13	9-4	–
28-18162-13	9-4	–
28-18162-14	9-3	–
28-18162-14	9-4	–
28-18162-14	9-4	–
28-18162-14-	9-3	–
28-18162-15	9-3	–
28-18162-15	9-4	–
28-18162-15	9-4	–
28-18162-17	9-3	–
28-18162-17	9-4	–
28-18162-17	9-4	–
28-18164-3	9-3	–
28-18164-3	9-4	–
28-18164-5	9-3	–
28-18164-5	9-4	–
28-18165-5	11-19	115
28-18166-1	9-3	10
28-18166-1	9-4	10
28-18166-3	9-3	10A
28-18166-3	9-4	10A
28-18166-5	9-4	10A
28-18166-7	9-4	10
28-18167-11	6-12	10
28-18167-13	6-12	10
28-18167-15	6-12	10
28-18167-17	6-12	10
28-18167-19	6-12	10
28-18167-21	6-12	10
28-18167-23	6-12	10
28-18167-25	6-12	10
28-18167-27	6-12	10

UNCONTROLLED COPY WHEN DOWNLOADED OR PRINTED

Visit www.enstromhelicopter.com for instructions to order an original manual and to register for email notification updates.

PART NUMBER INDEX
SECTIONS 3 THROUGH 6, 9, 10, AND 11
FIGURES 7-4C, 7-4D, 8-1 THROUGH 8-11, 12-1A THROUGH 12-2B,12-5, 12-6A, AND 12-10

Part Number	Figure	Item
28-18167-5	11-19	15
28-18171-29	11-7	500B
28-18171-31	11-7	500
28-18171-33	11-8	230
28-18171-33	11-7	–500A
28-18200-1	11-8	365
28-18200-1	11-7	–760
28-18200-3	11-7	760A
28-19001-943	6-4	70
28-19001-948	6-4	60
28-19003	6-1	80
28-19004	6-1	10
28-19016-11	6-2	70
28-19021-10	11-8	280
28-19021-10	11-9	200
28-19021-10	11-7	590
28-19021-10	11-7	800
28-19021-13	8-5	–130B
28-19021-15	8-5	–130A
28-19021-17	8-5	–150A
28-19021-19	8-5	–130C
28-19021-2	8-5	130
28-19021-21	8-5	–150B
28-19021-23	8-5	–130D
28-19021-25	8-5	–130E
28-19021-27	8-5	–150C
28-19021-29	8-5	160
28-19021-3	8-5	150
28-19021-31	8-5	140
28-19021-33	8-5	170
28-19021-35	8-5	–130F
28-19021-37	8-5	–130G
28-19021-39	8-5	–160A
28-19021-41	8-5	–140A
28-19021-43	8-5	–170A
28-19023	11-8	380
28-19023	11-9	290
28-19023	11-7	830
28-19025-1	6-14	70
28-19027-13	11-8	10
28-19027-13	11-7	10
28-19031	11-5	–
28-19032	11-5	–
28-19037-11	11-21	720
28-19040-5	6-14	–
28-19041	11-6	10
28-19041-111	6-11	–
28-19045-1	11-5	280
28-19045-3	11-5	280A
28-19045-5	11-5	280B
28-19045-7	11-5	280C
28-19045-9	11-5	280D
28-19046-11	11-8	15
28-19046-11	11-9	15
28-19046-11	11-7	40
28-19046-11	11-21	730
28-19047-1	6-11	250
28-19047-11	6-11	250
28-19048-11	6-11	230
28-19048-13	6-11	230
28-19055-11	6-13	140
28-19064-1	11-9	45
28-19064-1	11-7	20
28-19073	6-12	–
28-19073-1	11-7	740
28-19073-101	11-8	360
28-19073-3	11-7	740A
28-19073-5	11-7	740B
28-19073-7	11-7	740C
28-19101-11	11-21	740
28-19103-1	6-10	40
28-19104-1	6-9	40
28-19105-1	6-10	50
28-19105-1	6-9	60
28-19106-1	6-9	30
28-19106-3	6-10	30

UNCONTROLLED COPY WHEN DOWNLOADED OR PRINTED

Visit www.enstromhelicopter.com for instructions to order an original manual and to register for email notification updates.

PART NUMBER INDEX
SECTIONS 3 THROUGH 6, 9, 10, AND 11
FIGURES 7-4C, 7-4D, 8-1 THROUGH 8-11, 12-1A THROUGH 12-2B,12-5, 12-6A, AND 12-10

Part Number	Figure	Item
28-19106-3	6-9	30
28-19106-5	6-10	30
28-19106-5	6-13	90
28-19106-5	6-9	30
28-19123-9	11-8	375
28-19123-9	11-9	285
28-19123-9	11-7	820
28-19131-1	6-11	–
28-19132-3	6-5	200
28-20107-11	11-21	140
28-20107-11	11-21	750
28-20107-13	11-21	750
28-21000-1	6-4	–
28-21002	6-4	340
28-21002-3	6-4	340
28-21002-3	6-6	10
28-21002-4	6-4	340
28-21002-4	6-6	10
28-21003-1	6-4	330
28-21003-1	6-4	40
28-21004-1	6-6	40
28-21006-1	6-4	250
28-21007-1	6-4	240
28-21008-1	6-4	230
28-21009-1	6-4	220
28-21009-1	6-5	205
28-21009-1	6-5	60
28-21009-1	6-7	170
28-21009-1	6-8	10
28-21010-3	6-5	235
28-21011-1	6-4	180
28-21011-1	6-6	80
28-21012-1	6-4	160
28-21012-1	6-6	240
28-21014-1	6-4	270
28-21017-1	3-21	70
28-21021-1	11-21	760
28-21024-1	6-7	20
28-21034-1	6-7	40
28-21035-5	6-7	10
28-21035-5	11-21	770
28-21043-1	6-7	130
28-21048-1	6-5	–
28-21048-1	6-6	110A
28-21048-101	6-5	–
28-21048-101	6-6	110D
28-21048-3	6-5	–
28-21048-3	6-6	110B
28-21048-5	6-5	–
28-21048-5	6-6	110A
28-21048-6	6-5	–
28-21048-6	6-6	110B
28-21048-7	6-5	–
28-21048-7	6-6	110A
28-21048-8	6-5	–
28-21048-8	6-6	110B
28-21048-9	6-5	–
28-21048-9	6-6	110C
28-21050-11	6-7	180
28-21051-11	6-7	*50
28-21052-1	6-7	–
28-21053-3	6-7	–
28-22013-1	11-21	780
28-22016-1	11-21	790
28-22016-5	11-21	790
28-22018-1	11-21	800
28-22018-2	11-21	810
28-22019-1	11-21	820
28-22031-1	3-5.1	–
28-22032-1	3-5.1	160
28-22034-11	3-5.1	30
28-22081-5	11-8	–
28-22093-3	11-8	140
28-22093-3	11-9	60
28-22093-3	11-19	–
28-22093-3	11-7	350

UNCONTROLLED COPY WHEN DOWNLOADED OR PRINTED

Visit www.enstromhelicopter.com for instructions to order an original manual and to register for email notification updates.

PART NUMBER INDEX
SECTIONS 3 THROUGH 6, 9, 10, AND 11
FIGURES 7-4C, 7-4D, 8-1 THROUGH 8-11, 12-1A THROUGH 12-2B,12-5, 12-6A, AND 12-10

Part Number	Figure	Item
28-22094-11	11-19	155
28-22094-13	11-19	110
28-22096-11	11-19	125
28-22101	9-3	390
28-22101-1	9-2	29
28-22102-1	9-2	38
28-22117	9-3	320
28-22117-3	9-2	37
28-22199-1	9-2	34
28-22208-11	9-5	105
28-22209-101	9-5	110
28-22209-103	9-5	110
28-22210-9	9-5	–
28-22216-13	11-21	830
28-22343-1	11-21	840
28-22344-5	11-5	–
28-22350-1	8-3A	–
28-22501-1	11-21	850
28-22501-10	11-21	940
28-22501-11	11-6	330
28-22501-2	11-21	860
28-22501-3	11-21	870
28-22501-4	11-21	880
28-22501-5	11-21	890
28-22501-6	11-21	900
28-22501-7	11-21	910
28-22501-8	11-21	920
28-22501-9	11-21	930
28-22504-1	11-21	950
28-22505-1	11-21	960
28-22506-1	11-21	970
28-22507-1	11-21	980
28-22508-1	11-21	990
28-22540-11	11-21	1000
28-22540-17	11-8	155
28-22540-17	11-7	320
28-22540-19	11-19	10
28-22543-11	11-17	220
28-22543-11	11-21	1010
28-22543-13	11-8	135
28-22543-13	11-9	65
28-22543-13	11-7	340
28-22561-3	6-13	10
28-22562-17	6-13	50
28-22563-5	6-13	100
28-22606-1	11-21	1020
28-22607-1	11-21	1030
28-22608-1	11-21	1040
28-22609-11	11-21	1050
28-22613-1	11-21	1060
28-22615-11	11-21	1070
28-22615-13	11-21	1080
28-22615-15	11-21	1070
2852	11-17	240
2855	11-17	260
286377	6-12	60
2870	11-17	250
2871	11-17	230
28775-214	5-6	200
28NBC2040YZP	4-1	210
28NBC2040YZP	4-1	340
2904-33	11-2	300
2904-33	11-3	300
2904-33	11-5	–
2904-33F5	11-1	400
2904-33F5	11-4	–
2D8934	5-6	50
3/8 Harper	5-3	320
3/8-6NA	11-19	190
30-0009-36	6-6	50
300-037	6-10	20
30-1UL	11-8	20
30-1UL	11-9	20
30-1UL	11-5	290
30-1UL	11-7	30
3028-3/32	11-8	505

UNCONTROLLED COPY WHEN DOWNLOADED OR PRINTED

Visit www.enstromhelicopter.com for instructions to order an original manual and to register for email notification updates.

PART NUMBER INDEX
SECTIONS 3 THROUGH 6, 9, 10, AND 11
FIGURES 7-4C, 7-4D, 8-1 THROUGH 8-11, 12-1A THROUGH 12-2B,12-5, 12-6A, AND 12-10

Part Number	Figure	Item
3028-3/32	11-8	520
306590	5-4	140
313	6-5	20
31B22111	3-31	–
325E10-2	3-8	50
32-5R	6-4	310
327	11-8	50
327	11-9	–
327	11-7	80
32-7L	6-4	320
32NBC2044YZP	4-2	110
330	6-4	–
330	11-1	–
330	11-1	–
330	11-2	–
330	11-2	–
330	11-3	–
330	11-4	–
330	11-4	–
330	11-5	–
33-199-36	3-22	–
33-199-36	3-23	–
33-199-916	3-22	260
33-199-916	3-23	270
338382	5-4	140
34-0070371-02	6-4	150
34-0070373-01	6-4	–
34-0070373-01	6-4	–
34-0070373-01	6-4	–
34-0070373-01	6-4	90
34-0070373-01	6-6	350
34-0070373-03	6-6	350
34-0412070-63	6-6	140
34-0412070-63	6-6	440
34-0414020-65	6-4	–
34-0414020-65	6-4	–
34-0414020-65	6-4	–
34-0428020-65	6-6	390
34-0428070-64	6-6	140
340823	5-4	290
35-140-A	11-4	–
37A19773-376	3-21	–
38-0230021-00	6-4	–
38-0230021-00	6-4	–
38-0230021-00	6-4	–
381N-500-S	11-8	–
381N-500-S	11-9	–
3-904 V0894-90	3-8	66
3A1535-B96-A100	3-10	60
3A-3140	3-10	60
3A3408-2	10-4	220
3AG-1A	11-17	50
3BT5EE10J2	3-3	200
3BT5EE10J2	3-8	50
3MC1-3-2	6-3	–
3MC1-3-2	11-5	250
3MC1-3-2	11-6	190
400-003	3-5.1	50
400-003	3-5.1	80
400510	11-19	35
4016	11-8	470
40NBC2052YZP	4-2	90
4115001-19	9-3	340
4118265-21	7-4C	190
4118278-21	7-4C	80
4118278-23	7-4C	30
4118283-11	7-4C	50
4118284-13	7-4C	100
4118290-15	7-4C	-630
4118290-16	7-4C	620
4119780-23	9-5	20
4119835-33	11-8	355
4119835-33	11-8	5
4119835-33	6-12	20
4119839-11	7-4C	-290
4119920-11	11-21	150

UNCONTROLLED COPY WHEN DOWNLOADED OR PRINTED

Visit www.enstromhelicopter.com for instructions to order an original manual and to register for email notification updates.

PART NUMBER INDEX
SECTIONS 3 THROUGH 6, 9, 10, AND 11
FIGURES 7-4C, 7-4D, 8-1 THROUGH 8-11, 12-1A THROUGH 12-2B,12-5, 12-6A, AND 12-10

Part Number	Figure	Item
4119920-13	11-21	160
4119920-15	11-21	170
4164	6-13	191
4166053-11	8-9	–
4166053-11	8-10	–
4166053-13	8-9	–
4166053-13	8-10	–
4166053-15	8-9	–
4166053-15	8-10	–
4192509-901	6-11	10
4196603-23	11-8	75
4196603-23	11-9	–
4196603-23	11-7	170
4196609-11	6-14	80
4199059-1	6-14	70
4199059-3	6-14	70
4199072-11	6-11	–
41EN-G3-2311	11-1	–
41EN-G3-2311	11-1	–
41EN-G3-2311	11-1	–
41EN-G3-2311	11-2	–
41EN-G3-2311	11-2	–
41EN-G3-2311	11-2	–
41EN-G3-2311	11-3	–
41EN-G3-2311	11-3	–
41EN-G3-2311	11-5	–
41EN-G3-2313	11-1	–
41EN-G3-2313	11-2	–
41EN-G3-2313	11-3	–
41EN-G3-2313	11-5	–
41EN-G5-2312	11-1	–
41EN-G5-2312	11-2	–
4208-00	3-26	100
4222	3-26	140
4232	3-26	10
4234	3-26	20
4235	3-26	50
4241	3-26	70
43-13-1-24	3-20	–
43-13-1-24	3-20	–
43-13-1-24	3-20A	–
43-13-1-24	3-20A	–
43-13-1-24	3-20B	–
43-13-1-24	3-20B	–
439-4-8-2-6	11-15	95
439-4-8-2-6	11-13	80
439-4-8-2-6	11-14	–
4406	6-5	50
444-4-2-6	11-15	120
444-4-2-6	3-24	230
444-4-4-2-6	11-13	90
444-4-4-2-6	11-14	90
4503	3-26	90
4508-2	3-20	630
4508-2	3-20A	630
4508-2	3-20B	630
4508-75	8-5	620
4509	6-4	210
4509	6-7	60
4509	6-8	20
4591	6-5	50
4596	6-8	20A
4600-00	3-26	–
488-4D28-20	3-8	20
48P6	3-23	171
49726	11-13	–
4FBTX-D	3-24	80
4-FBTX-D	3-22	310
4JBTX-D	3-24	100
4-LHBTX-S	3-22	440
4SN-188-C-73	5-5	230
4-VBTX-S	3-22	420
4WBTX-S	3-24	180
5/16 HARPER	8-4	150
5/8-6B	11-20	20
5/8-6NA	6-6	290

UNCONTROLLED COPY WHEN DOWNLOADED OR PRINTED

Visit www.enstromhelicopter.com for instructions to order an original manual and to register for email notification updates.

PART NUMBER INDEX
SECTIONS 3 THROUGH 6, 9, 10, AND 11
FIGURES 7-4C, 7-4D, 8-1 THROUGH 8-11, 12-1A THROUGH 12-2B,12-5, 12-6A, AND 12-10

Part Number	Figure	Item
5045	4-2	160
507-507-101	11-1	80
507-507-101	11-1	320
507-507-101	11-1	340
507-507-101	11-2	–
507-507-101	11-2	210
507-507-101	11-2	230
507-507-101	11-3	–
507-507-101 (7.5A)	11-5	220
5102-137-PP	12-6A	130
511T1-2	11-1	50
511TS1-2	11-1	60
5310-00-063-9015	6-6	300
550	9-3	70
550	9-3	90
550	9-4	110
550	9-4	220
550	9-4	70
551-5	11-11	220
55-4527-1067	3-14	80
57-3255-2121	3-10	60
57-3255-2121	3-15	70
58390	6-11	50
588-6D1	3-4	140
59-022-094-0500	5-5	70
5934	11-1	160
5934	11-3	50
5934	11-4	50
5934-1	11-2	50
5934M	11-2	–50A
5934PD-3-A.253	11-5	60
5934PD-3-A.253	11-7	120
5934PD-3-A.253	11-8	60
5934PD-3-A.253	11-9	40
6 X 3/8	11-8	350
6 X 3/8	11-19	20
6 X 3/8	11-7	750
600700-0000	3-3	200
600700-0000	3-8	50
601002-4-0120	11-10	50
601002-6-0180	3-4	90
601002-6-0180	3-6	50
6041-ED22	6-2	20
6041H34	6-1	30
60617-1	11-7	–
60618-1	11-8	–
60618-1	6-11	–
60618-1	11-7	–
60685K31	7-4C	-455
60686K31	7-4C	-525
608036-1	11-19	–
608036-1	11-19	–
608036-1	11-19	–
608036-1	11-19	–
608036-1	11-19	–
608036-1	11-19	–
62	3-24	550
624100-4-0120	3-22	430
624100-6-0060	3-22	410
624100-6-0180	3-6	60
624117-6-0180	3-22	350
624117-6-0180	3-6	50
62447-6-180	3-4	90
6312-H69	11-4	–40A
6312-H69A	11-2	40
6312-H69A	11-3	40
6-4 C5OX-S	3-8	67
64021	6-9	20
64-632-74	3-24	430
6487923	3-1	30
6487923	3-2	30
65-29AP	11-1	180
65-29AP	11-4	70
65-29B	11-2	70
65-29B	11-3	70
65-29B	11-4	–70A

UNCONTROLLED COPY WHEN DOWNLOADED OR PRINTED

Visit www.enstromhelicopter.com for instructions to order an original manual and to register for email notification updates.

PART NUMBER INDEX
SECTIONS 3 THROUGH 6, 9, 10, AND 11
FIGURES 7-4C, 7-4D, 8-1 THROUGH 8-11, 12-1A THROUGH 12-2B,12-5, 12-6A, AND 12-10

Part Number	Figure	Item
65-4527-2229	3-10	10
65-4527-2229	3-14	80
65614	3-20	420
65614	3-20A	420
65614	3-20B	420
65614	3-9	140
66224	3-3	150
6-6FBTX-D	3-24	270
6-6FBTX-S	3-22	230
67-02-E-18-64S	8-5	190
67-06-C-18-64P	8-5	200
6-8 F5OX-S	3-23	120
68-2290005-30	6-6	400
68-4230020-30	6-4	–
68-4230020-40	6-4	–
68-4230020-40	6-6	120A
68-4230020-40	6-6	30
68-4230020-50	6-4	–
68-4230020-50	6-6	120
68-4230020-50	6-6	30
68-4250066-30	6-6	410
68-4270002-30	6-6	430
6-F5OX-S	3-22	210
6RX1/2	8-5	610
6-S5OX-S	3-22	360
6-V5OX-S	3-22	140
6x1/2	9-1	5
6x1/2	9-2	4
6X3/8	6-12	30
700-001-10	11-6	440
700-001-15	11-1	90
700-001-20	11-1	100
700-001-20	11-5	240
700200	11-19	25
700702-16	11-19	175
702-5123	8-5	–180G
702-5130	8-5	–180H
7079B-12	6-4	150
7101SYZQE	11-8	150
7101SYZQE	11-9	185
7101SYZQE	11-19	30
7101SYZQE	11-7	680
7101SYZQE	11-17	30
7235-1-100	6-13	185
7235-1-100	6-3	10
726607	6-11	40
726621	5-6	130
726621	6-11	–
7270-1-20	11-5	200
7270-1-3	11-8	255
7270-1-3	11-9	135
7270-1-3	11-5	190
7270-1-3	11-7	540
7270-1-35	11-8	240
7270-1-35	11-9	130
7270-1-35	11-7	510
7270-1-5	11-8	250
7270-1-5	11-9	140
7270-1-5	11-5	180
7270-1-5	11-7	520
7270-1-7 1/2	11-7	550
7270-1-7 1/2	11-8	260
7270-1-7 1/2	11-9	145
7270-1-7 1/2	11-5	170
7270-1-7 1/2	11-1	–
7274-2-10	11-8	205
7274-2-10	11-7	440
7274-2-2 1/2	11-7	420
7274-2-2 1/2	11-8	195
7274-2-3	11-8	215
7274-2-3	11-7	460
7274-2-5	11-8	210
7274-2-5	11-7	450
7277-5-2	11-9	115
7277-5-3	11-9	110
7277-5-5	11-9	120

UNCONTROLLED COPY WHEN DOWNLOADED OR PRINTED

Visit www.enstromhelicopter.com for instructions to order an original manual and to register for email notification updates.

PART NUMBER INDEX
SECTIONS 3 THROUGH 6, 9, 10, AND 11
FIGURES 7-4C, 7-4D, 8-1 THROUGH 8-11, 12-1A THROUGH 12-2B,12-5, 12-6A, AND 12-10

Part Number	Figure	Item
732BL	11-8	–
732BL	11-8	–
732-RTV	3-16	30
7361	5-4	80
74465	3-30	90
748-RTV	11-19	–
75118	3-27	80
75386	3-22	470
755-2-2-6	10-1	6
755-2-2-6	10-2	6
755-2-2-6	10-3	–
755-2-2-6	10-3	–
755-2-2-6	10-4	140
755-2-2-6	10-4	240
770001-5	11-8	285
770001-5	11-9	205
770001-5	11-7	600
773-4/50 VDC	11-1	30
773-4/50 VDC	11-5	–
773-8/50 VDC	11-5	–
77611	3-27	80
77611	3-28	140
786-4	3-24	120
786-4-CU	3-24	120
79012-062-0500	12-2B	220
79-012-062-0500	11-18	95
79-048-250-0625	5-5	60
8 X 3/8	7-4D	30
8000 B.786	11-5	50
8000 B.852	11-7	400
8000 B.853	11-8	185
8000 B.853	11-9	95
8000 CODE B251	11-3	60
8000-B.852	11-5	50
8000-B.853	11-5	50A
8000-B160	11-2	60
8000-B160	11-5	50
8000-B251	11-4	–60A
8000-B251	11-5	50B
8000-B251	11-6	30
8000-B332	11-2	–60A
8000T	11-1	170
8000T	11-4	60
800-28V-BAT	11-8	100
803-1710-0331-5	11-3	–
803-1710-0331-504	6-11	190
803-1710-0331-504	11-1	–
803-1710-0331-504	11-4	–
803-1710-0331-504	11-5	–
804-1710-0332-5	11-3	–
804-1710-0332-504	11-1	–
804-1710-0332-504	11-4	240
804-1710-0332-504	11-5	–
8110-CC	3-22	150
8134K21A1M50	11-4	20
8134K21A1M52	11-1	130
8134K21A1T50	11-1	10
8134K21A1T50	11-4	10
8190002	3-22	370
8190042	3-23	370
82-19-120-16	3-20	–
82-19-120-16	3-20	–
82-19-120-16	3-20A	–
82-19-120-16	3-20A	–
82-19-120-16	3-20B	–
82-19-120-16	3-20B	–
82-19-140–16	3-20	–
82-19-140–16	3-20	–
82-19-140–16	3-20A	–
82-19-140–16	3-20A	–
82-19-140–16	3-20B	–
82-19-140–16	3-20B	–
82-32-101-20	3-20	–
82-32-101-20	3-20	–
82-32-101-20	3-20A	–
82-32-101-20	3-20A	–

UNCONTROLLED COPY WHEN DOWNLOADED OR PRINTED

Visit www.enstromhelicopter.com for instructions to order an original manual and to register for email notification updates.

PART NUMBER INDEX
SECTIONS 3 THROUGH 6, 9, 10, AND 11
FIGURES 7-4C, 7-4D, 8-1 THROUGH 8-11, 12-1A THROUGH 12-2B,12-5, 12-6A, AND 12-10

Part Number	Figure	Item
82-32-101-20	3-20B	–
82-32-101-20	3-20B	–
82-35-302-15	3-18	–
82-35-302-15	3-18	–
82-35-302-15	3-18	–
82-35-302-15	3-20	–
82-35-302-15	3-20	–
82-35-302-15	3-20	–
82-35-302-15	3-20	–
82-35-302-15	3-20	–
82-35-302-15	3-20	–
82-35-302-15	3-20	–
82-35-302-15	3-20A	–
82-35-302-15	3-20A	–
82-35-302-15	3-20A	–
82-35-302-15	3-20A	–
82-35-302-15	3-20A	–
82-35-302-15	3-20A	–
82-35-302-15	3-20A	–
82-35-302-15	3-20B	–
82-35-302-15	3-20B	–
82-35-302-15	3-20B	–
82-35-302-15	3-20B	–
82-35-302-15	3-20B	–
82-35-302-15	3-20B	–
8473 H5L16	5-6	–
8473H5L16	5-7	90
8473RUPH5-L16	5-6	–
848-FSO-10-08	3-7	10
848-FSO-10-08	3-7	320
849-FSO-06-08	3-23	220
85-9217-06	3-30	40A
883-FS-06X04	3-4	120
8x1/2	10-1	17
8x1/2	10-2	9
8X1/2	3-17	90
8x1/2	9-1	15
8x1/2	9-3	–
8x1/2	9-4	–
8x3/4	9-2	7
8X3/8	6-5	255
8x3/8	9-3	20
8x3/8	9-3	20A
8x3/8	9-4	–
8x3/8	9-4	–
8X5/8	3-20	291
951789	3-23	660
959-5	4-4	130
96394-01	3-30	–A
97CSX-2 24VDC	6-7	190
980-001	3-2	270
980-001	4-2	–
980-001	6-6	200
980-001	11-20	90
A005-1991	12-1B	130
A01784-6Z-1D	3-17	20
A01787-8Z-1D	7-4D	40
A01789-8Z-1D	3-20	292
A06191-8Z-1D	6-12	40
A-10019-D	3-23	140
A-10019-E	3-23	140
A10K166	7-4C	650
A-1280-1	6-6	60
A-1280-2	6-6	30
A-1280-3	6-6	30
A1285-C-12	6-4	80
A1285-G-12	6-4	20
A-1285-G-12	6-6	20B
A1285-R-12	6-4	10
A-1285-R-12	6-6	20A
A1784-6Z-1	3-17	20
A1784-6Z-1	9-1	10
A1787-8Z-1	9-1	4
A1789-8Z1	10-1	8
A1789-8Z1	10-2	8

UNCONTROLLED COPY WHEN DOWNLOADED OR PRINTED

Visit www.enstromhelicopter.com for instructions to order an original manual and to register for email notification updates.

PART NUMBER INDEX
SECTIONS 3 THROUGH 6, 9, 10, AND 11
FIGURES 7-4C, 7-4D, 8-1 THROUGH 8-11, 12-1A THROUGH 12-2B,12-5, 12-6A, AND 12-10

Part Number	Figure	Item
A1789-8Z1	10-3	–
A1789-8Z1	10-4	150
A-218-938517-00	8-5	–180F
A350CNIWBKSH28	11-8	80
A350CNIWBKSH28	11-7	180
A413A,HDA,DF	6-6	150
A421-1	11-21	1260
A-440	6-6	100
A457A	6-6	430
A469	6-6	360
A470-R	6-6	230
A490T-DF14	6-6	150A
A490T-DF28	6-6	150B
A508-14	6-6	140
A508-14	6-6	440
A508-28	6-6	140
A53C	3-1	30
A53C	3-2	30
A555-H	6-6	420
A610	6-6	130
A612	6-6	400
A615	6-6	410
A6195-8Z1D	9-4	–
A6195-8Z-1D	9-4	–
A-740-12	10-1	19
A-740-12	10-2	21
A-740-12	10-3	14
A-740-12	10-4	220
A-8110-G	3-22	150
A8943-632-493	11-6	70
A8944-632-493	11-6	150
A8970B-1-330	11-1	390
A8970B-1-330	11-2	290
A8970B-1-330	11-3	290
A8970B-1-330	11-4	280
A8970B-1-330	11-5	–
A8970B-1-330	11-6	180
A-8970B-1-330	6-4	350
AA-2204	6-12	80
AA-28-14385-15	4-2.1	10A
AA-28-14386-1	4-2.1	40A
AA8131	6-12	120
AA-832-06	11-8	485
AA86146	5-6	170
AA-ECD-084-280	4-2.1	50
ABM1M-A-C	11-19	120
ABM1M-A-C	6-12	90
ABM1M-A-C	6-2	–
AC78M	6-9	10
ACF-50	4-2	–
AE80664H	3-3	–
AEROSHELL 22	5-2	–
AFP5	3-1	30
AFP5	3-2	30
AJW4-30	3-2	111
AJW4-30	3-20	–
AJW4-30	3-20	–
AJW4-30	3-20A	–
AJW4-30	3-20A	–
AJW4-30	3-20B	–
AJW4-30	3-20B	–
AJW4-30	3-20B	–
AJW4-30	3-20B	–
ALJF3T	7-4C	520
ALJFL3T	7-4C	450
ALU8521LS	3-31	–
AN173-17A	3-11	70
AN173-21A	3-11	80
AN174-21	8-4	280
AN176-15A	4-2	290
AN176-17A	4-2	300
AN178-21	4-3	130
AN178H-65A	5-4	150
AN178H-66A	5-4	150
AN178H-67A	5-4	150
AN178H-70A	5-4	150

UNCONTROLLED COPY WHEN DOWNLOADED OR PRINTED

Visit www.enstromhelicopter.com for instructions to order an original manual and to register for email notification updates.

PART NUMBER INDEX
SECTIONS 3 THROUGH 6, 9, 10, AND 11
FIGURES 7-4C, 7-4D, 8-1 THROUGH 8-11, 12-1A THROUGH 12-2B,12-5, 12-6A, AND 12-10

Part Number	Figure	Item
AN2552-3A	6-13	120
AN3-10	3-10	280
AN310-5	3-28	380
AN310-7	3-30	50A
AN3-10A	3-10	140
AN3-10A	3-11	130
AN3-10A	8-11	50
AN3-11	3-28	330
AN3-11A	11-18	5
AN3-11A	12-2B	280
AN3-11A	3-23	550
AN3-11A	3-6	150
AN3-11A	3-7	120
AN3-11A	5-3	190
AN3-12	3-11	460
AN3-12A	11-9	210
AN3-12A	3-10	210
AN3-12A	3-13	70
AN3-12A	4-2	425
AN3-12A	4-2.1	130
AN3-12A	5-5	250
AN3-12A	11-7	610
AN3-13	3-11	420
AN3-13	3-14	70
AN3-13A	3-10	170
AN3-13A	3-12	110
AN3-13A	3-13	40
AN3-13A	3-26	200
AN3-14A	3-23	560
AN3-14A	6-13	30
AN3-14A	8-5A	140
AN315-3L	7-4C	440
AN315-3R	3-10	270
AN315-3R	3-14	40
AN315-3R	3-15	40
AN315-3R	3-28	230
AN315-3R	3-28	280
AN315-3R	3-28	280
AN315-3R	3-28	280
AN315-3R	7-4C	530
AN315-4R	6-2	–
AN315-4R	6-2	–
AN315-4R	6-2	–
AN316-12	3-24	460
AN316-12R	3-15	80
AN316-12R	3-24	460
AN316-12R	5-3	480
AN316-3R	3-14	40
AN316-3R	3-15	40
AN316-4L	8-11	210
AN316-4R	3-11	–
AN316-4R	3-11	190
AN316-4R	8-11	210
AN316-5	8-3	150
AN316-5	8-5	–
AN316-5L	12-5	150
AN316-5L	5-5	210
AN316-5L	8-4	120
AN316-5L	8-5	–
AN316-5R	12-5	170
AN316-5R	5-2	160
AN316-5R	5-5	190
AN316-5R	8-3	150
AN316-5R	8-4	110
AN316-5R	8-6A	120
AN316-6R	5-6	–
AN316-6R	6-11	30
AN316-7R	3-14	90
AN316-7R	3-15	100
AN316-8R	3-14	90
AN316-8R	3-15	100
AN316-8R	5-3	500
AN3-16A	8-11	90
AN3-17A	8-5	310
AN3-17A	8-7	50

UNCONTROLLED COPY WHEN DOWNLOADED OR PRINTED

Visit www.enstromhelicopter.com for instructions to order an original manual and to register for email notification updates.

PART NUMBER INDEX
SECTIONS 3 THROUGH 6, 9, 10, AND 11
FIGURES 7-4C, 7-4D, 8-1 THROUGH 8-11, 12-1A THROUGH 12-2B,12-5, 12-6A, AND 12-10

Part Number	Figure	Item
AN320-6	8-1	150
AN320-7	8-1	120
AN320-8	5-3	90
AN320-8	8-3A	400
AN3-21A	9-5	60
AN3-22	3-11	380
AN3-22A	5-1	120
AN3-22A	8-11	300
AN3-23A	3-12	90
AN3-3A	3-20	450
AN3-3A	3-20A	450
AN3-3A	3-20B	450
AN3-3A	3-22	20
AN3-3A	6-2	–
AN3-3A	6-2	–
AN3-3A	6-3	20
AN3-3A	8-5	240
AN340-4	8-9	90
AN340-4	8-10	90
AN340-6	3-16	110
AN340-6	3-26	120
AN340-6	11-20	80
AN340-632	3-20	370
AN340-632	3-20A	370
AN340-632	3-20B	370
AN340-632	11-5	–
AN340-632	11-6	80
AN340-8	10-3	–
AN340-8	10-4	210
AN340-8	3-2	250
AN340-8	3-20	600
AN340-8	3-20A	600
AN340-8	3-20B	600
AN340-8	3-22	130
AN340-8	3-23	110
AN340-8	3-24	140
AN340-8	3-4	310
AN340-8	3-5	80
AN340-8	3-6	120
AN340-8	3-7	80
AN340-8	5-1	370
AN340-8	6-1	–
AN340-8	6-1	–
AN340-8	6-1	–
AN340-8	6-1	–
AN340-8	6-13	–
AN340-8	6-2	–
AN340-8	9-1	8
AN340-8	9-2	14
AN340-8	11-13	110
AN340-8	11-14	140
AN340-8	11-16	80
AN340-832	11-18	50
AN340-832	12-2B	120
AN340-832	3-2	250
AN340-832	3-4	310
AN340-832	3-9	120
AN340-832	8-3A	290
AN340-832	11-17	180
AN341-516	6-13	–
AN345-10	3-1	90
AN345-10	3-20	595
AN345-10	3-20B	595
AN345-10	3-25	50
AN345-10	6-13	–
AN345-10	8-9	–
AN345-10	8-10	–
AN3-4A	3-10	30
AN3-4A	3-12	20
AN3-4A	3-20	470
AN3-4A	3-20A	470
AN3-4A	3-20B	–
AN3-4A	3-20B	470
AN3-4A	3-23	20
AN3-4A	3-6	250
AN3-4A	3-7	150

UNCONTROLLED COPY WHEN DOWNLOADED OR PRINTED

Visit www.enstromhelicopter.com for instructions to order an original manual and to register for email notification updates.

PART NUMBER INDEX
SECTIONS 3 THROUGH 6, 9, 10, AND 11
FIGURES 7-4C, 7-4D, 8-1 THROUGH 8-11, 12-1A THROUGH 12-2B,12-5, 12-6A, AND 12-10

Part Number	Figure	Item
AN3-4A	3-7	250
AN3-4A	6-13	186
AN3-4A	6-13	260
AN3-4A	9-5	40
AN3-4A	8-6	40
AN3-4A	8-6A	130
AN3-5	3-10	230
AN3-5A	12-2A	70
AN3-5A	3-12	70
AN3-5A	3-20	500
AN3-5A	3-20A	500
AN3-5A	3-20B	500
AN3-5A	3-21	20
AN3-5A	3-7	330
AN3-5A	5-5	310
AN3-6	12-6A	190
AN3-6	3-13	90
AN363-524	3-3	180
AN364-1018A	5-6	20
AN364-1032	8-5	260
AN364-1032	8-5A	160
AN364-1032	8-6	60
AN364-1032	8-7	70
AN364-1032A	3-10	190
AN364-1032A	3-11	160
AN364-1032A	3-13	60
AN364-1032A	3-21	50
AN364-1032A	3-26	220
AN364-1032A	5-1	150
AN364-1032A	5-3	460
AN364-1032A	5-5	300
AN364-1032A	6-13	–
AN364-1032A	6-13	–
AN364-1032A	6-13	–
AN364-1032A	6-13	188
AN364-1032A	6-13	195
AN364-1032A	6-14	130
AN364-1032A	6-3	40
AN364-1032A	8-11	70
AN364-1032A	8-6A	150
AN364-1216A	4-2	270
AN364-428	8-8	60
AN364-428A	3-22	180
AN364-428A	3-22	290
AN364-428A	3-23	190
AN364-428A	5-1	490
AN364-428A	5-1	70
AN364-428A	5-5	140
AN364-428A	6-13	–
AN364-428A	8-11	10
AN364-428A	8-11	150
AN364-428A	12-10	300
AN364-524A	5-4	230
AN364-624A	4-2	320
AN364-624A	5-3	330
AN364-632A	6-14	40
AN364-632A	6-4	–
AN364-632A	6-4	–
AN364-632A	6-4	–
AN364-632A	6-4	–
AN364-632A	6-4	–
AN364-632A	6-4	–
AN364-632A	6-6	190
AN364-632A	9-2	41
AN364-632A	12-10	330
AN364-820A	5-3	130
AN364-820A	5-4	120
AN364-832	6-5	32
AN364-832	9-3	360
AN364-832A	10-3	–
AN364-832A	10-3	–
AN364-832A	10-3	–
AN364-832A	10-3	–
AN364-832A	10-4	270
AN364-832A	10-4	410
AN364-832A	10-4	90

UNCONTROLLED COPY WHEN DOWNLOADED OR PRINTED

Visit www.enstromhelicopter.com for instructions to order an original manual and to register for email notification updates.

PART NUMBER INDEX
SECTIONS 3 THROUGH 6, 9, 10, AND 11
FIGURES 7-4C, 7-4D, 8-1 THROUGH 8-11, 12-1A THROUGH 12-2B,12-5, 12-6A, AND 12-10

Part Number	Figure	Item
AN364-832A	11-19	228
AN364-832A	3-2	190
AN364-832A	6-6	340
AN364-832A	6-7	110
AN364-832A	6-7	210
AN364-832A	9-2	32
AN364-832A	9-3	410
AN364-832A	11-11	200
AN365-1032A	11-18	10
AN365-1032A	12-1B	90
AN365-1032A	3-10	160
AN365-1032A	3-10	40
AN365-1032A	3-11	100
AN365-1032A	3-12	50
AN365-1032A	3-20	520
AN365-1032A	3-20A	520
AN365-1032A	3-20B	520
AN365-1032A	3-23	580
AN365-1032A	3-6	170
AN365-1032A	3-6	270
AN365-1032A	3-7	140
AN365-1032A	5-3	220
AN365-1032A	5-6	–
AN365-1032A	6-13	61
AN365-1032A	11-11	90
AN365-1032C	3-27	70
AN365-1032C	3-28	110
AN365-1032C	3-28	110
AN365-1032C	3-28	50
AN365-428	5-6	310
AN365-428	5-7	80
AN365-428A	12-1B	120
AN365-428A	5-4	410
AN365-428A	6-2	–
AN365-524A	4-1	140
AN365-624A	5-4	380
AN365-632A	3-17	130
AN365-632A	6-11	–
AN365-632A	6-6	260
AN365-632A	9-3	110
AN365-632A	9-4	100
AN365-8	10-1	–
AN365-832	10-2	–
AN365-832A	3-10	100
AN365-832A	3-2	190
AN365-832A	6-11	221
AN365-832A	8-6	120
AN365-832A	8-6A	60
AN3-6A	3-21	20
AN3-6A	3-3	–
AN3-6A	6-13	–
AN3-7	3-10	330
AN3-7	3-14	10
AN3-7	3-15	10
AN380-2-2	10-1	11
AN380-2-2	10-2	12
AN380-4-8	4-2	200
AN381-2-10	12-6B	250
AN381-2-10	5-1	300
AN381-2-10	7-4C	70
AN381-2-10	8-3	50
AN381-2-10	8-5	470
AN381-2-12	3-24	530
AN381-2-16	12-6B	90
AN381-2-7	8-2	70
AN381-2-7	8-3A	370
AN381-2-7	8-4	300
AN381-2-8	10-3	–
AN381-2-8	10-4	170
AN381-2-8	12-5	100
AN381-2-8	12-5	210
AN381-2-8	12-6A	250
AN381-2-8	3-10	250
AN381-2-8	3-11	320
AN381-2-8	3-13	110
AN381-2-8	3-14	60

UNCONTROLLED COPY WHEN DOWNLOADED OR PRINTED

Visit www.enstromhelicopter.com for instructions to order an original manual and to register for email notification updates.

PART NUMBER INDEX
SECTIONS 3 THROUGH 6, 9, 10, AND 11
FIGURES 7-4C, 7-4D, 8-1 THROUGH 8-11, 12-1A THROUGH 12-2B,12-5, 12-6A, AND 12-10

Part Number	Figure	Item
AN381-2-8	3-15	60
AN381-2-8	3-28	320
AN381-2-8	5-2	110
AN381-2-8	5-3	410
AN381-2-8	5-5	170
AN381-2-8	8-3	100
AN381-2-8	8-4	190
AN381-2-8	8-5	420
AN381-2-8	8-5A	130
AN381-2-8	8-6A	200
AN381-3-12	8-5A	80
AN381-3-16	4-3	170
AN381-3-16	8-1	140
AN381-3-16	8-3A	410
AN386-2-7A	12-1B	60
AN386-2-7A	5-6	–
AN386-2-8A	12-1B	50
AN393-11	3-28	300
AN394-17	5-5	150
AN3C10A	3-29	100
AN3C4A	3-27	60
AN3C4A	3-28	100
AN3C4A	3-28	100
AN3C4A	3-28	40
AN3H3A	12-1A	240
AN3H5A	12-2A	70A
AN3H-5A	5-3	450
AN3H6A	5-3	450
AN4076-1	11-19	130
AN4076-1	5-6	160
AN4-10A	8-11	130
AN4-10A	8-8	70
AN4-11	5-3	360
AN4-11	8-4	230
AN4-11A	8-8	140
AN4-12A	5-5	100
AN4-12A	8-8	30
AN4-13	12-5	10
AN4-13A	3-22	270
AN4-13A	3-23	290
AN4-13A	5-5	350
AN4-14	12-5	190
AN4-14	5-1	260
AN4-14	5-3	550
AN4-14	8-3	70
AN4-15A	5-1	10
AN4-16	3-11	330
AN4-17	8-5	370
AN4-17A	5-6	290
AN4-17A	5-7	60
AN4-17A	8-8	110
AN4-23	8-3A	310
AN4-23A	5-1	220
AN426A3-3	3-19	–
AN4-37	3-11	270
AN4-3A	3-22	160
AN4-3A	3-23	180
AN4-3A	6-13	180
AN4-3A	6-2	–
AN4-3A	6-2	–
AN4-3A	6-2	–
AN4-3A	6-2	–
AN4-4A	5-6	220
AN4-5A	5-3	150
AN4-5A	12-10	280
AN4-6A	5-1	470
AN4-6A	9-5	10
AN4-7A	12-1B	100
AN4-7A	5-4	390
AN4C5A	3-29	60
AN4H10A	4-4	170
AN4H-12A	3-11	260
AN4H15A	4-4	280
AN4H4A	12-10	270
AN500-416-7	3-23	160
AN500-6-8	3-26	110

UNCONTROLLED COPY WHEN DOWNLOADED OR PRINTED

Visit www.enstromhelicopter.com for instructions to order an original manual and to register for email notification updates.

PART NUMBER INDEX
SECTIONS 3 THROUGH 6, 9, 10, AND 11
FIGURES 7-4C, 7-4D, 8-1 THROUGH 8-11, 12-1A THROUGH 12-2B,12-5, 12-6A, AND 12-10

Part Number	Figure	Item
AN502-10-10	8-3A	260
AN502-10-10	8-9	20
AN502-10-10	8-10	20
AN502-10-14	3-28	220
AN502-10-8	3-20	400
AN502-10-8	3-20A	400
AN502-10-8	3-20B	400
AN502-10-8	3-9	130
AN502-10-8	8-9	–
AN502-10-8	8-10	–
AN503-10-10	8-2	10
AN503-10-10	8-3A	170
AN503-10-18	12-6B	260
AN503-10-6	5-2	50
AN503-10-8	12-6A	240
AN503-10-8	3-3	210
AN503-416-10	3-20	530
AN503-416-10	3-20	530
AN503-416-10	3-20A	530
AN503-416-10	3-20B	530
AN503-416-10	3-20B	530
AN503-416-10	3-4	40
AN503-416-28	3-20	530
AN503-416-28	3-20A	530
AN503-416-28	3-20B	530
AN503-416-28	3-7	360
AN503-8-6	8-7	–
AN503-8-6	8-10	380
AN503-8-8	8-9	130
AN503-8-8	8-9	380
AN503-8-8	8-10	130
AN507-1032R14	6-13	130
AN507-632R12	6-4	100
AN507-632R14	6-6	170
AN507-632R24	6-6	160
AN507-632R8	6-4	50
AN507-632R8	6-6	210
AN507-632R8	6-6	380
AN507-832-16	6-9	50
AN507-832R10	11-20	120
AN507-B-632-R6	11-6	430
AN509-10R16	6-13	192
AN509-10R38	3-12	80
AN509-832R4	6-11	240
AN5-10	8-5	430
AN5-11	8-4	200
AN5-11	8-5	520
AN5-11	8-6A	160
AN5-11A	3-3	170
AN5-12	8-3	20
AN5-12	8-5	510
AN5-13	8-5A	90
AN515-10-6	3-1	60
AN515-4R12	8-9	60
AN515-4R12	8-10	60
AN515-6-6	3-20	340
AN515-6-6	3-20A	340
AN515-6-6	3-20B	340
AN515-6-6	6-4	260
AN515-6-6	6-4	300
AN515-6-R11	6-5	190
AN515-6R3	11-17	20
AN515-6R7	3-17	110
AN515-6R8	3-26	110
AN515-8-10	6-1	130
AN515-8-10	6-1	70
AN515-8-10	11-14	–
AN515-8-16	3-22	100
AN515-8-16	11-14	110
AN515-8-20	11-14	170
AN515-8-24	11-14	–
AN515-8-7	10-1	20
AN515-8-7	10-2	22
AN515-8-8	3-2	230
AN515-8-8	6-1	110
AN515-8-8	6-1	50

UNCONTROLLED COPY WHEN DOWNLOADED OR PRINTED

Visit www.enstromhelicopter.com for instructions to order an original manual and to register for email notification updates.

PART NUMBER INDEX
SECTIONS 3 THROUGH 6, 9, 10, AND 11
FIGURES 7-4C, 7-4D, 8-1 THROUGH 8-11, 12-1A THROUGH 12-2B,12-5, 12-6A, AND 12-10

Part Number	Figure	Item
AN515-8-8	11-14	160
AN515-8R10	3-22	400
AN515-8R10	3-23	80
AN515-8R10	3-24	240
AN515-8R10	3-4	280
AN515-8R10	3-5	50
AN515-8R10	3-6	90
AN515-8R10	3-7	50
AN515-8R10	11-13	100
AN515-8R10	11-16	120
AN515-8R12	3-4	280
AN515-8R14	6-11	60
AN515-8R16	3-22	100
AN515-8R16	11-13	150
AN515-8R20	3-24	250
AN515-8R7	10-3	–
AN515-8R7	10-3	7
AN515-8R7	10-3	8
AN515-8R7	3-17	140
AN515-8R7	3-20	430
AN515-8R7	3-20A	430
AN515-8R7	3-20B	430
AN515-8R7	3-6	230
AN515-8R7	3-7	250
AN515-8R7	3-7	280
AN515-8R8	10-2	–
AN515-8R8	10-3	–
AN515-8R8	10-4	180
AN515-8R8	10-4	230
AN515-8R8	10-4	50
AN515-8R8	12-2B	90
AN515-8R8	3-19	140
AN515-8R8	3-2	260
AN515-8R8	3-20	570
AN515-8R8	3-20A	570
AN515-8R8	3-20B	570
AN515-8R8	3-24	130
AN515-8R8	11-17	150
AN515-8-R8	11-18	40
AN515-8R8-832	3-2	230
AN515B-6-R12	11-6	50
AN515B-6-R14	11-5	–
AN515B-6-R14	11-6	140
AN515B-6-R16	11-6	60
AN515B-6-R18	11-6	130
AN515-B6R3	11-8	130
AN515-B6R3	11-9	–
AN515-B6R3	11-7	330
AN515B-6-R6	11-6	220
AN515B-6-R7	11-6	380
AN515B-8-R12	11-8	515
AN5-16	8-4	140
AN517-8R7	3-9	90
AN5-22	5-1	400
AN525-10R10	7-4C	360
AN525-10R24	6-13	70
AN525-832R10	11-19	185
AN525-832R10	9-2	30
AN525-832R10	9-3	370
AN525-832R14	6-11	150
AN525-832R14	9-3	370A
AN525-832R18	3-24	250
AN525-832R22	3-25	90
AN525-832R6	3-1	160
AN525-832R6	6-5	220
AN525-832R6	7-4C	260
AN525-832R6	8-6A	40
AN525-832R8	11-19	205
AN525-832R8	3-23	50
AN525-832R8	3-25	20
AN525-832R8	6-10	60
AN525-832R8	11-11	180
AN525-832R8	11-16	60
AN525-8R20	6-5	30
AN525-8R6	5-1	340
AN526-1032R6	6-14	110

UNCONTROLLED COPY WHEN DOWNLOADED OR PRINTED

Visit www.enstromhelicopter.com for instructions to order an original manual and to register for email notification updates.

PART NUMBER INDEX
SECTIONS 3 THROUGH 6, 9, 10, AND 11
FIGURES 7-4C, 7-4D, 8-1 THROUGH 8-11, 12-1A THROUGH 12-2B,12-5, 12-6A, AND 12-10

Part Number	Figure	Item
AN526-1032R8	3-20	565
AN526-1032R8	3-20A	565
AN526-1032R8	3-20B	565
AN526-1032R8	3-20B	565
AN526-1032R8	3-5.1	150
AN526-1032R8	6-13	–
AN526-1032R8	11-11	70
AN526-632R10	9-2	39
AN526-632R12	11-19	45
AN526-632R16	6-5	–
AN526-632R16	6-5	–
AN526-632R4	5-4	340
AN526-632R5	6-14	20
AN526-632R6	6-6	250
AN526-632R6	11-20	40
AN526-632R7	6-4	130
AN526-632R7	6-6	280
AN526-632R7	11-20	50
AN526-632R8	6-4	170
AN526-632R8	6-4	280
AN526-632R8	6-6	310
AN526-632R8	6-6	370
AN526-632R8	6-7	160
AN526-6R6	3-16	80
AN526-832-5	3-2	260
AN526-832R10	6-11	210
AN526-832R10	6-5	240
AN526-832R10	6-7	30
AN526-832R6	6-4	200
AN526-832R7	10-4	300
AN526-832R7	10-4	390
AN526-832R7	3-10	80
AN526-832R7	6-11	210
AN526-832R8	10-3	12
AN526-832R8	11-19	226
AN526-832R8	3-2	120
AN526-832R8	6-10	60
AN526-832R8	6-13	250
AN526-832R8	6-5	210
AN526-832R8	6-5	40
AN526-832R8	6-6	320
AN526-832R8	6-7	90
AN526-832R8	6-8	40
AN526-832R8	9-1	6
AN526-832R8	9-2	12
AN526-832R8	9-3	270
AN526-832R8	9-4	240
AN526-832R9	6-5	245
AN526-8R7	3-10	80
AN526-8R8	9-3	330
AN526C832R8	3-22	50
AN530-6-8	9-3	40
AN530-6-8	9-4	40
AN530-6R6	3-17	30
AN530-6R6	3-17	60
AN530-8-8	10-1	7
AN530-8-8	10-2	7
AN530-8R8	10-3	4
AN530-8R8	10-4	130
AN530-8R8	3-17	160
AN530-8R8	3-17	180
AN530-8R8	9-1	3
AN530-8R8	9-3	530
AN530-8R8	9-4	–
AN530C10-8	3-28	–
AN530C8-8	3-27	–
AN531-6R10	9-4	80
AN531-6R8	9-3	60
AN531-6R8	9-4	60
AN5-35A	5-4	210
AN5-43A	4-1	50
AN5-44A	4-1	50
AN5-4A	6-13	220
AN5546-1	11-19	135
AN5546-1	5-6	170
AN5C13A	3-29	90

UNCONTROLLED COPY WHEN DOWNLOADED OR PRINTED

Visit www.enstromhelicopter.com for instructions to order an original manual and to register for email notification updates.

PART NUMBER INDEX
SECTIONS 3 THROUGH 6, 9, 10, AND 11
FIGURES 7-4C, 7-4D, 8-1 THROUGH 8-11, 12-1A THROUGH 12-2B,12-5, 12-6A, AND 12-10

Part Number	Figure	Item
AN5H-45A	4-1	20
AN5H-46A	4-1	20
AN5H-6A	4-1	10
AN6-10A	5-4	360
AN6195-8Z-1D	9-3	–
AN6195-8Z-1D	9-3	–
AN6-22	8-5A	60
AN6227-6	5-6	–
AN635-632A	9-4	210
AN665-46R	5-5	180
AN737TW22	3-3	320
AN737TW22	3-4	80
AN737TW34-38	3-3	130
AN73A3	5-3	430
AN742-40	10-1	–
AN742D28	3-5.1	90
AN742D28	3-5.1	170
AN742D38	10-3	–
AN742D48	10-3	–
AN742D48	10-3	15
AN742D48	10-4	250
AN742D48	10-4	70
AN742D-48	3-1	40
AN742-D48	10-2	28
AN742-F6	3-20	620
AN742-F6	3-20A	620
AN742-F6	3-20B	620
AN742F8	5-5	290
AN743-13	10-1	21
AN743-13	10-2	23
AN743-13	10-3	17
AN743-13	10-4	470
AN743-13	11-15	110
AN743-13	11-19	230
AN743-13	3-24	–
AN743-13	3-24	–
AN743-13	3-24	–
AN743-13	3-24	320
AN743-13	11-11	100
AN743-13	11-13	140
AN743-13	11-14	150
AN74A11	3-3	50
AN74A4	3-1	130
AN74A4	3-2	290
AN74A4	3-29	80
AN74A5	3-3	110
AN7-50	3-30	10A
AN75A12	8-4	260
AN75-A12	4-2	350
AN75A41	3-23	460
AN75A5	3-29	70
AN75A5	3-3	20
AN75A6	4-2	340
AN75A6	8-4	250
AN7H7A	12-10	350
AN8-10A	5-4	20
AN814-2DL	12-1A	70
AN814-2DL	4-4	260
AN815-4	3-22	440
AN815-4	3-23	440
AN815-4	11-11	150
AN815-4D	3-4	170
AN815-4D	11-7	690
AN815-4D	11-8	340
AN815-4D	11-9	270
AN815-4D	11-10	100
AN815-4D	11-12	40
AN815-4D	11-13	70
AN815-4D	11-15	60
AN815-6	3-23	–
AN815-6	3-6	70
AN815-6	3-8	80
AN816-4	3-4	190
AN816-4	3-8	40
AN816-4D	11-8	–
AN816-4D	11-8	–

UNCONTROLLED COPY WHEN DOWNLOADED OR PRINTED

Visit www.enstromhelicopter.com for instructions to order an original manual and to register for email notification updates.

PART NUMBER INDEX
SECTIONS 3 THROUGH 6, 9, 10, AND 11
FIGURES 7-4C, 7-4D, 8-1 THROUGH 8-11, 12-1A THROUGH 12-2B,12-5, 12-6A, AND 12-10

Part Number	Figure	Item
AN816-4D	11-8	–
AN816-4D	11-8	–
AN816-4D	11-8	325
AN816-4D	11-9	255
AN816-4D	3-22	310
AN816-4D	3-23	320
AN816-4D	3-24	350
AN816-4D	3-24	80
AN816-4D	3-8	40
AN816-4D	11-7	730
AN816-4D	11-12	10
AN816-4D	11-12	130
AN816-4D	11-13	180
AN816-6	3-22	230
AN816-6	3-23	400
AN816-6D	3-24	270
AN816-6D	5-6	110
AN818-4D	11-15	–
AN818-4D	11-15	–
AN818-4D	11-15	–
AN818-4D	11-15	–
AN818-4D	11-15	–
AN818-4D	11-15	–
AN818-4D	11-15	–
AN818-4D	11-15	–
AN818-4D	3-24	80
AN822-4D	3-24	350
AN822-4D	11-11	20
AN822-6D	3-26	180
AN823-4D	3-24	350
AN823-6-6D	3-6	20
AN824-4D	11-12	30
AN824-4D	11-15	55
AN824-4D	3-24	100
AN824-4D	3-24	100
AN824-6D	3-4	100
AN832-4	3-24	180
AN832-4D	3-24	180
AN832-4D	11-10	70
AN832-4D	11-11	110
AN833-4	11-13	60
AN833-4	11-14	10
AN833-4D	11-15	15
AN834-4	3-24	380
AN834-4D	3-24	380
AN834-4D	11-11	40
AN900-10	5-6	120
AN900-6	5-6	140
AN900-8	5-6	120
AN911-1D	3-24	360
AN911-1D	11-13	190
AN911-4D	3-24	360
AN911-4D	11-12	120
AN914-1D	3-23	610
AN916-516L	8-6A	180
AN917-10	11-8	455
AN917-1D	11-7	970
AN917-1D	11-9	365
AN917-1D	11-13	–
AN917-4D	11-12	50
AN919-1	3-22	500
AN919-1S	3-23	520
AN919-1S	11-10	40
AN924-4	11-15	25
AN924-4	3-24	190
AN924-4	11-14	20
AN924-4D	3-2	140
AN924-4D	11-10	90
AN924-4D	11-11	130
AN924-4W	11-11	130
AN924-6D	3-2	210
AN931-12-20	3-23	490
AN931-2-9	3-22	490
AN931-2-9	3-23	510
AN931-3-10	6-4	290
AN931-3-9	3-4	60

UNCONTROLLED COPY WHEN DOWNLOADED OR PRINTED

Visit www.enstromhelicopter.com for instructions to order an original manual and to register for email notification updates.

PART NUMBER INDEX
SECTIONS 3 THROUGH 6, 9, 10, AND 11
FIGURES 7-4C, 7-4D, 8-1 THROUGH 8-11, 12-1A THROUGH 12-2B,12-5, 12-6A, AND 12-10

Part Number	Figure	Item
AN931-4-16	3-24	510
AN931-4-7	6-10	70
AN931-4-7	6-11	180
AN931-4-7	6-7	220
AN931-4-7	6-7	70
AN931-4-7	11-16	90
AN931-4-7	11-17	80
AN931-5-12	3-2	170
AN931-5-9	3-10	50
AN931-5-9	3-2	170
AN931-6-10	3-15	140
AN931-6-10	6-14	50
AN931-6-10	11-17	60
AN931-8-13	3-22	330
AN931-8-13	6-9	90
AN932-D3	3-26	170
AN935-10	3-1	80
AN935-10	3-20	585
AN935-10	3-20A	585
AN935-10	3-20B	585
AN935-10	6-13	–
AN935-10	8-9	–
AN935-10	8-10	–
AN935-10L	3-25	60
AN935-4	8-9	80
AN935-4	8-10	80
AN935-416	5-6	230
AN935-6	3-16	100
AN935-6	3-20	360
AN935-6	3-20A	360
AN935-6	3-20B	360
AN935-6	11-5	–
AN935-6	11-6	90
AN935-6	11-20	70
AN935-8	10-2	–
AN935-8	10-3	–
AN935-8	10-4	190
AN935-8	11-18	55
AN935-8	12-2B	110
AN935-8	3-2	240
AN935-8	3-20	590
AN935-8	3-20A	590
AN935-8	3-20B	590
AN935-8	3-22	120
AN935-8	3-23	100
AN935-8	3-24	150
AN935-8	3-4	300
AN935-8	3-5	70
AN935-8	3-6	110
AN935-8	3-7	70
AN935-8	3-9	110
AN935-8	5-1	350
AN935-8	6-1	–
AN935-8	6-1	–
AN935-8	6-1	–
AN935-8	6-1	–
AN935-8	6-13	–
AN935-8	11-13	130
AN935-8	11-14	130
AN935-8	11-16	70
AN935-8	11-17	170
AN935-BBL	11-8	510
AN936A10	3-20	410
AN936A10	3-20A	410
AN936A10	3-20B	410
AN936A1216	3-15	90
AN936A1216	3-24	450
AN936A516	3-24	70
AN936A516	3-24	70
AN936A516	3-3	300
AN936A516	6-13	–
AN936-A6	3-17	70
AN936-A6	6-6	270
AN936A716	3-14	100
AN936A716	3-15	110
AN936A8	9-3	300

UNCONTROLLED COPY WHEN DOWNLOADED OR PRINTED

Visit www.enstromhelicopter.com for instructions to order an original manual and to register for email notification updates.

PART NUMBER INDEX
SECTIONS 3 THROUGH 6, 9, 10, AND 11
FIGURES 7-4C, 7-4D, 8-1 THROUGH 8-11, 12-1A THROUGH 12-2B,12-5, 12-6A, AND 12-10

Part Number	Figure	Item
AN936A8	9-4	260
AN960-10	10-3	–
AN960-10	11-18	15
AN960-10	12-1B	70
AN960-10	12-2B	270
AN960-10	3-11	400
AN960-10	3-11	90
AN960-10	3-12	30
AN960-10	3-20	510
AN960-10	3-20A	510
AN960-10	3-20B	510
AN960-10	3-21	30
AN960-10	3-21	40
AN960-10	3-23	30
AN960-10	3-23	570
AN960-10	3-6	160
AN960-10	3-7	130
AN960-10	4-2	–
AN960-10	4-2	430
AN960-10	4-2.1	140
AN960-10	5-1	450
AN960-10	5-3	210
AN960-10	6-13	–
AN960-10	6-13	–
AN960-10	6-13	193
AN960-10	12-10	240
AN960-10	8-9	30
AN960-10	8-10	30
AN960-10L	12-1A	230
AN960-10L	12-6A	200
AN960-10L	12-6B	270
AN960-10L	3-1	70
AN960-10L	3-10	150
AN960-10L	3-10	180
AN960-10L	3-12	40
AN960-10L	3-13	50
AN960-10L	3-14	20
AN960-10L	3-15	20
AN960-10L	3-20	460
AN960-10L	3-20A	460
AN960-10L	3-20B	460
AN960-10L	3-21	30
AN960-10L	3-21	40
AN960-10L	3-22	30
AN960-10L	3-24	540
AN960-10L	3-25	70
AN960-10L	3-28	310
AN960-10L	3-3	–
AN960-10L	3-6	260
AN960-10L	3-7	160
AN960-10L	3-7	260
AN960-10L	4-2.1	150
AN960-10L	5-1	130
AN960-10L	5-2	60
AN960-10L	5-3	200
AN960-10L	5-3	440
AN960-10L	5-5	260
AN960-10L	6-13	–
AN960-10L	6-13	–
AN960-10L	6-13	187
AN960-10L	6-13	194
AN960-10L	6-13	40
AN960-10L	6-13	60
AN960-10L	6-14	120
AN960-10L	6-2	–
AN960-10L	6-3	30
AN960-10L	8-3A	270
AN960-10L	8-5	250
AN960-10L	8-5A	150
AN960-10L	12-10	–
AN960-10L	8-6	50
AN960-10L	8-6A	140
AN960-10L	8-7	60
AN960-1216	3-24	440
AN960-1216L	3-10	110
AN960-1216L	3-15	120

UNCONTROLLED COPY WHEN DOWNLOADED OR PRINTED

Visit www.enstromhelicopter.com for instructions to order an original manual and to register for email notification updates.

PART NUMBER INDEX
SECTIONS 3 THROUGH 6, 9, 10, AND 11
FIGURES 7-4C, 7-4D, 8-1 THROUGH 8-11, 12-1A THROUGH 12-2B,12-5, 12-6A, AND 12-10

Part Number	Figure	Item
AN960-3	3-20	–
AN960-3	3-20A	–
AN960-3	3-20B	–
AN960-3L	6-7	150
AN960-416	10-1	–
AN960-416	12-5	60
AN960-416	12-5	70
AN960-416	3-11	350
AN960-416	3-22	280
AN960-416	3-23	300
AN960-416	4-4	160
AN960-416	5-1	280
AN960-416	5-3	160
AN960-416	5-3	390
AN960-416	5-4	400
AN960-416	5-5	330
AN960-416	5-6	240
AN960-416	8-3	80
AN960-416	8-4	290
AN960-416	8-5	380
AN960-416	8-8	150
AN960-416L	10-2	–
AN960-416L	10-3	6
AN960-416L	10-4	160
AN960-416L	3-1	140
AN960-416L	3-11	360
AN960-416L	3-2	300
AN960-416L	3-20	390
AN960-416L	3-20	540
AN960-416L	3-20A	390
AN960-416L	3-20A	540
AN960-416L	3-20B	390
AN960-416L	3-20B	540
AN960-416L	3-22	170
AN960-416L	3-22	170
AN960-416L	3-23	170
AN960-416L	3-29	120
AN960-416L	3-3	100
AN960-416L	3-4	50
AN960-416L	5-1	20
AN960-416L	5-5	110
AN960-416L	6-13	–
AN960-416L	8-11	140
AN960-416L	8-2	50
AN960-416L	8-4	240
AN960-416L	12-10	260
AN960-416L	8-8	40
AN960-4L	10-3	–
AN960-4L	10-4	320
AN960-4L	8-9	70
AN960-4L	8-10	70
AN960-516	12-6A	–55
AN960-516	12-6B	–230
AN960-516	3-23	470
AN960-516	3-23	470
AN960-516	3-3	30
AN960-516	4-1	60
AN960-516	4-2	360
AN960-516	5-1	420
AN960-516	5-2	90
AN960-516	5-4	220
AN960-516	8-3	30
AN960-516	8-4	170
AN960-516	8-5	440
AN960-516	8-6A	170
AN960-516L	12-6A	50
AN960-516L	12-6B	220
AN960-516L	3-29	130
AN960-516L	4-2	360
AN960-516L	5-1	410
AN960-516L	6-13	–
AN960-516L	8-4	210
AN960-516L	8-5	450
AN960-516L	8-5A	100
AN960-6	3-20	350
AN960-6	3-20A	350

UNCONTROLLED COPY WHEN DOWNLOADED OR PRINTED

Visit www.enstromhelicopter.com for instructions to order an original manual and to register for email notification updates.

PART NUMBER INDEX
SECTIONS 3 THROUGH 6, 9, 10, AND 11
FIGURES 7-4C, 7-4D, 8-1 THROUGH 8-11, 12-1A THROUGH 12-2B,12-5, 12-6A, AND 12-10

Part Number	Figure	Item
AN960-6	3-20B	350
AN960-6	6-6	180
AN960-616	5-6	270
AN960-616L	3-10	110
AN960-616L	5-4	370
AN960-616L	8-1	110
AN960-6L	3-16	90
AN960-6L	3-17	100
AN960-6L	3-17	120
AN960-6L	3-17	40
AN960-6L	6-14	30
AN960-6L	6-4	–
AN960-6L	6-4	–
AN960-6L	6-4	–
AN960-6L	6-4	–
AN960-6L	6-4	–
AN960-6L	6-4	–
AN960-6L	6-6	220
AN960-6L	9-2	40
AN960-6L	9-3	100
AN960-6L	9-4	200
AN960-6L	9-4	90
AN960-6L	11-5	–
AN960-6L	11-6	100
AN960-716	3-2	150
AN960-716	3-30	70
AN960-716	11-10	80
AN960-716	11-11	120
AN960-716	12-10	340
AN960-716L	3-10	120
AN960-716L	3-14	110
AN960-716L	3-15	130
AN960-716L	3-30	80
AN960-716L	8-1	100
AN960-8	10-1	–
AN960-8	11-18	45
AN960-8	12-2B	100
AN960-8	12-2B	320
AN960-8	3-1	170
AN960-8	3-7	260
AN960-8	3-7	290
AN960-8	6-1	–
AN960-8	6-11	170
AN960-8	6-11	220
AN960-8	6-13	–
AN960-8	6-7	120
AN960-8	6-7	200
AN960-8	11-11	190
AN960-816	4-3	140
AN960-816	5-4	160
AN960-816L	3-24	200
AN960-8L	10-2	–
AN960-8L	10-2	–
AN960-8L	10-3	–
AN960-8L	10-3	–
AN960-8L	10-3	–
AN960-8L	10-3	–
AN960-8L	10-3	–
AN960-8L	10-4	200
AN960-8L	10-4	260
AN960-8L	10-4	400
AN960-8L	10-4	80
AN960-8L	11-19	227
AN960-8L	3-10	90
AN960-8L	3-17	150
AN960-8L	3-19	150
AN960-8L	3-2	180
AN960-8L	3-20	440
AN960-8L	3-20	580
AN960-8L	3-20A	440
AN960-8L	3-20A	580
AN960-8L	3-20B	440
AN960-8L	3-20B	580
AN960-8L	3-22	110
AN960-8L	3-23	90
AN960-8L	3-24	160

UNCONTROLLED COPY WHEN DOWNLOADED OR PRINTED

Visit www.enstromhelicopter.com for instructions to order an original manual and to register for email notification updates.

PART NUMBER INDEX
SECTIONS 3 THROUGH 6, 9, 10, AND 11
FIGURES 7-4C, 7-4D, 8-1 THROUGH 8-11, 12-1A THROUGH 12-2B,12-5, 12-6A, AND 12-10

Part Number	Figure	Item
AN960-8L	3-4	290
AN960-8L	3-5	60
AN960-8L	3-6	100
AN960-8L	3-7	60
AN960-8L	3-9	100
AN960-8L	4-1	310
AN960-8L	5-1	360
AN960-8L	6-1	–
AN960-8L	6-1	–
AN960-8L	6-1	–
AN960-8L	6-4	–
AN960-8L	6-5	-–
AN960-8L	6-5	–
AN960-8L	6-5	31
AN960-8L	6-6	330
AN960-8L	6-7	100
AN960-8L	9-1	7
AN960-8L	9-2	13
AN960-8L	9-3	280
AN960-8L	9-3	350
AN960-8L	9-3	400
AN960-8L	9-4	250
AN960-8L	8-6	110
AN960-8L	8-6A	50
AN960-8L	11-13	120
AN960-8L	11-14	120
AN960-8L	11-16	130
AN960-8L	11-17	160
AN960-916	3-2	220
AN960C10	3-29	110
AN960-C10	5-6	–
AN960C10L	11-11	80
AN960-C10L	12-2A	80
AN960C1216	4-2	260
AN960C1216	5-3	470
AN960C1216	8-11	270
AN960C416L	12-1B	110
AN960C416L	12-1B	110A
AN960C516	3-29	140
AN960-C516L	6-13	196
AN960C616L	3-8	170
AN960C816	5-3	120
AN960D10L	3-26	210
AN960D10L	8-2	20
AN960D516	4-1	30
AN960D516	8-4	220
AN960D616	4-2	310
AN960D8	4-1	160
AN960D8	4-2	230
AN960D8	4-2	40
AN960PD416	11-20	140
AN960PD6L	11-20	60
AN962-C516L	6-13	196
AN970-3	6-13	95
AN975-3	12-1B	80
ANL80	6-13	190
AP18AU06-02	3-6	10
AP22-6	4-3	110
AS3494-01	3-8	120
AS3578-152	5-4	50
ASMK8T	5-3	520
AWG-22-8503-10	11-8	490
AWG-22-8503-2	11-8	495
AX142P	11-20	90
B-00264-3	6-2	50A
B-00375-4	6-14	–
B-00378-5	11-8	400
B-00378-5	11-9	310
B-00378-5	6-14	–
B-00378-5	11-7	870
B-1210	12-10	50
B44-28-2	11-18	130
B-44-28-2	12-2B	150
B46-2 1/2	8-9	230
B46-2 1/2	8-10	230
B-4855B-330	11-3	340

UNCONTROLLED COPY WHEN DOWNLOADED OR PRINTED

Visit www.enstromhelicopter.com for instructions to order an original manual and to register for email notification updates.

PART NUMBER INDEX
SECTIONS 3 THROUGH 6, 9, 10, AND 11
FIGURES 7-4C, 7-4D, 8-1 THROUGH 8-11, 12-1A THROUGH 12-2B,12-5, 12-6A, AND 12-10

Part Number	Figure	Item
B-4855B-330	11-4	330
B-4855B-330	11-5	–
B-4855B-330	11-6	40
B-710	11-18	125
B-710	12-2B	160
BA-15	3-1	–
BA-15	3-2	–
C-2400L4VT-AB	11-1	–
C2400L4VWAB-RG	11-5	260A
C-2400L4VW-AB-RG	11-2	–
C-2400L4VW-AB-RG	11-3	–
C-2400L4VW-AB-RG	11-4	270
C352TS	9-2	33A
C352TS	9-3	380
C6052-8Z-1	3-27	–
C6191-8Z-1	6-12	40
C-6352-10Z	3-28	–
C-836-06	6-12	120
CA151PL	3-1	30
CAV-110H-U	3-23	620
CAV-110R	3-23	310
CAV-110R	3-23	620
CAV-110RV	3-23	620
CB35M	6-10	10
CB6009CR08-1P	7-4C	250
CBLS18C	6-11	300
CBR1.5I-M	11-17	200
CBR1M-M	11-17	190
CBR2M-M	11-17	190
CBR3I-M	11-17	200
CBR3S-M	11-16	150
CBR3S-M	11-17	210
CCA-1600	3-6	130
CCH25-S10	11-16	40
CCH25-S10	11-17	70
CCR264SS-3-03	5-3	–
CCR264-SS3-3	6-8	–
CCR264-SS3-3	6-8	–
CCR274SS-3-02	10-4	310
CCR274SS-3-02	11-21	180
CD7	12-1A	–110
CD7L	5-6	138
CF600391-00	3-3	–
CGP-2	3-23	640
CL30914-2	5-4	–
CM1816	6-5	20
CP25WB+	11-19	215
CR 17240	4-2.1	20
CR163-4-4	10-3	13
CR163-4-4	10-4	310
CR3213-4-2	6-13	110
CR3213-5-04	6-11	–
CS-N-346	6-12	110
D6-167	6-6	300
D6-167	11-20	30
D6810A-12	6-4	110
D6SE-167GY	11-20	30
D-7080A-12	6-4	140
DG-167	11-16	50
ECD001-11	12-10	140
ECD002-11	12-10	160
ECD002-13	12-10	160
ECD009-11	8-1	30
ECD013-11	8-3A	100
ECD013-13	8-3A	–
ECD014-11	5-4	260
ECD014-13	5-4	260
ECD015-11	12-2A	20
ECD016-11	12-6A	90
ECD016-11	12-6B	70
ECD018-11	5-3	40
ECD020-11	5-4	90
ECD020-13	5-4	90
ECD030-11	8-3A	390
ECD034-11	8-9	280
ECD034-11	8-10	280

UNCONTROLLED COPY WHEN DOWNLOADED OR PRINTED

Visit www.enstromhelicopter.com for instructions to order an original manual and to register for email notification updates.

PART NUMBER INDEX
SECTIONS 3 THROUGH 6, 9, 10, AND 11
FIGURES 7-4C, 7-4D, 8-1 THROUGH 8-11, 12-1A THROUGH 12-2B,12-5, 12-6A, AND 12-10

Part Number	Figure	Item
ECD036-11	5-3	300
ECD037-11	811	250
ECD050-11	12-5	20
ECD050-11	12-5	90
ECD050-11	12-6A	140
ECD050-11	3-3	60
ECD050-11	5-1	480
ECD050-11	7-4C	40
ECD050-11	8-11	160
ECD050-11	8-3	110
ECD050-11	8-3A	320
ECD050-11	8-5	350
ECD050-11	9-5	25
ECD050-11	12-10	290
ECD050-11	8-8	120
ECD050-15	8-11	270
ECD050-17	12-10	290
ECD050-19	8-4	150
ECD050-23	11-19	125
ECD050-25	8-11	20
ECD060-11	7-4C	-175
ECD060-12	7-4C	-185
ECD066-1	11-18	115
ECD066-1	12-2B	180
ECD066-1	8-9	170
ECD066-1	8-10	170
ECD069-11	6-1	90
ECD069-11	6-2	10
ECD069-11	6-2	10A
ECD069-11	6-2	50A
ECD069-13	6-2	10B
ECD071-103	11-8	123
ECD071-103	11-9	47
ECD071-103	11-6	240
ECD071-103	11-7	250
ECD071-104	11-8	124
ECD071-104	11-9	48
ECD071-104	11-6	250
ECD071-104	11-7	260
ECD071-105	11-8	125
ECD071-105	11-9	49
ECD071-105	11-6	260
ECD071-105	11-7	270
ECD071-106	11-8	126
ECD071-106	11-9	50
ECD071-106	11-6	270
ECD071-106	11-7	280
ECD071-107	11-8	127
ECD071-107	11-9	51
ECD071-107	11-6	280
ECD071-107	11-7	290
ECD071-108	11-8	128
ECD071-108	11-9	52
ECD071-108	11-6	290
ECD071-108	11-7	300
ECD071-11	11-1	190
ECD071-11	11-2	80
ECD071-11	11-3	–
ECD071-11	11-3	80
ECD071-11	11-4	80
ECD071-11	11-5	90
ECD071-11	11-6	230
ECD071-15	11-8	122
ECD071-15	11-9	46
ECD071-15	11-6	230
ECD071-15	11-7	240
ECD071-3	11-1	200
ECD071-3	11-2	90
ECD071-3	11-3	–
ECD071-3	11-3	90
ECD071-3	11-4	90
ECD071-3	11-5	100
ECD071-4	11-1	220
ECD071-4	11-2	110
ECD071-4	11-3	–
ECD071-4	11-3	110

UNCONTROLLED COPY WHEN DOWNLOADED OR PRINTED

Visit www.enstromhelicopter.com for instructions to order an original manual and to register for email notification updates.

PART NUMBER INDEX
SECTIONS 3 THROUGH 6, 9, 10, AND 11
FIGURES 7-4C, 7-4D, 8-1 THROUGH 8-11, 12-1A THROUGH 12-2B,12-5, 12-6A, AND 12-10

Part Number	Figure	Item
ECD071-4	11-4	110
ECD071-4	11-5	110
ECD071-5	11-1	240
ECD071-5	11-2	130
ECD071-5	11-3	–
ECD071-5	11-3	130
ECD071-5	11-4	130
ECD071-5	11-5	120
ECD071-6	11-1	210
ECD071-6	11-2	100
ECD071-6	11-3	–
ECD071-6	11-3	100
ECD071-6	11-4	100
ECD071-6	11-5	130
ECD071-7	11-1	230
ECD071-7	11-2	120
ECD071-7	11-3	–
ECD071-7	11-3	120
ECD071-7	11-4	120
ECD071-7	11-5	140
ECD071-8	11-1	250
ECD071-8	11-2	140
ECD071-8	11-3	–
ECD071-8	11-3	140
ECD071-8	11-4	140
ECD071-8	11-5	150
ECD072-11	11-8	170
ECD072-11	11-9	80
ECD072-11	11-3	–
ECD072-11	11-5	70
ECD072-11	11-6	350
ECD072-11	11-7	390
ECD073-1	6-11	90
ECD073-3	6-11	90A
ECD075-11	6-1	30
ECD075-11	6-2	20
ECD075-11	6-2	20A
ECD075-11	6-2	20A
ECD075-13	6-2	20A
ECD075-13	6-2	20A
ECD077-11	11-8	165
ECD077-11	11-9	70
ECD077-11	11-3	–
ECD077-11	11-5	80
ECD077-11	11-6	310
ECD077-11	11-7	380
ECD078-11	11-8	465
ECD078-11	11-9	375
ECD078-11	11-3	–
ECD078-11	11-5	–
ECD078-11	11-7	990
ECD078-11	11-12	–140A
ECD079-11	11-3	–
ECD079-11	11-12	140
ECD088-11	3-25	10
ECD088-13	3-25	10
ECD088-15	3-25	10
ECD089-3	11-8	45
ECD089-3	11-9	25
ECD089-3	11-7	70
ECD091-1	4-4	200
ECD091-1	5-3	520
ECD093-11	3-24	440
ECD108-1	11-18	60
ECD108-3	11-18	65
ECD108-3	12-2B	20
ECD110-11	3-8	190
ECD111-11	3-3	260
ECD112-1	11-9	100
ECD112-3	11-9	170
ECD4079-1	6-11	41
ECD4089-11	9-4	140
ECD4089-15	9-4	150
EGT-701-4C-A-T	11-8	–
EGT-701-4C-A-T	11-19	5
EL-037360-107	3-28	10

UNCONTROLLED COPY WHEN DOWNLOADED OR PRINTED

Visit www.enstromhelicopter.com for instructions to order an original manual and to register for email notification updates.

PART NUMBER INDEX
SECTIONS 3 THROUGH 6, 9, 10, AND 11
FIGURES 7-4C, 7-4D, 8-1 THROUGH 8-11, 12-1A THROUGH 12-2B,12-5, 12-6A, AND 12-10

Part Number	Figure	Item
EL-037360-110	3-28	70
EL-037360-111	3-28	70
EL-037360-112	3-28	120
EL-037360-112	3-28	120
EL-037360-113	3-28	60
EL-037360-116	3-28	130
EL-037360-123	3-28	130
EL-037360-202	3-28	20
EL-037360-206	3-28	80
EL-037360-401	3-28	30
EL-037360-401	3-28	90
EL-099005-401	3-27	50
EL-099005-401	3-28	30
EL-099005-401	3-28	90
ENS1001	3-3	270
ENX-0001	3-28	130
ENX-0001	3-3	–
F12-NE-4527-02	3-14	50
F12NE4717-048	8-2	60
F12NE4717-070	8-1	120
F12NE4753-02	3-28	350
F12NE-4753-02	12-6A	220
F12-NE-4753-02	3-10	240
F12-NE-4753-02	3-11	410
F12-NE-4753-02	3-13	100
F12-NE-4753-02	3-14	50
F12-NE-4753-02	3-15	50
F12NE4753-048	12-5	110
F12NE-4753-048	12-6A	150
F12NE-4753-048	5-1	290
F12NE-4753-048	5-3	400
F12NE-4753-048	8-3	90
F12NE-4753-048	8-3A	360
F12NE-4753-048	8-4	270
F12NE-4753-048	8-5	410
F12-NE-4753-048	3-11	310
F12NE-4753-054	8-6A	190
F12NE-4753-054	12-6A	60
F12NE-4753-054	12-6B	240
F12NE-4753-054	5-1	440
F12NE-4753-054	5-2	100
F12NE-4753-054	8-3	40
F12NE-4753-054	8-4	180
F12NE-4753-054	8-5	460
F12NE-4753-054	8-5A	120
F12NE-4753-064	8-5A	70
F12NE-4753-080	4-3	160
F6YN-625BK	11-20	20
F965	5-6	190
FB68-4	5-1	390
FIT-221V-3/32	11-8	–
FIT-221V-3/32	11-19	170
FN22M-624	4-3	120
FN22M-624	5-6	280
G08DU	3-10	310
G08DU	3-10	310
G08DU	3-13	30
G199-105-4	3-22	240
G199-105-4	3-23	250
G2-0032	8-5	–180I
G-243	6-13	80
G-38517-B-7-A	8-5	180
G-89	3-16	–
G-89	3-16	–
G-89	3-16	–
G-89	3-20	–
G-89	3-20	–
G-89	3-20	–
G-89	3-20	–
G-89	3-20A	–
G-89	3-20A	–
G-89	3-20B	–
G-89	3-20B	–
G-89	3-20B	–
G-89	3-20B	–
GA4-250	3-2	112

UNCONTROLLED COPY WHEN DOWNLOADED OR PRINTED

Visit www.enstromhelicopter.com for instructions to order an original manual and to register for email notification updates.

PART NUMBER INDEX
SECTIONS 3 THROUGH 6, 9, 10, AND 11
FIGURES 7-4C, 7-4D, 8-1 THROUGH 8-11, 12-1A THROUGH 12-2B,12-5, 12-6A, AND 12-10

Part Number	Figure	Item
GA4-250	3-20	–
GA4-250	3-20A	–
GA4-250	3-20A	–
GA4-250	3-20B	–
GA4-250	3-20B	–
GA4-250	3-20B	–
GA4-250	3-20B	–
GB-910	8-4	70
GE4313 (250W)	6-4	210
GEE62FR-C	11-19	–
GEM 610	11-17	10
GH2 1/2	9-2	33A
GS-3	3-23	640
GX-5	8-9	210
GX-5	8-10	210
H-103	6-6	70
H1-400-14	11-5	260
HDUH	8-10	190
HFVV3M	3-14	30
HFVV3M	3-15	30
HFVV3M	3-28	290
HFVV3M	3-28	290
HFVV3M	3-28	290
HFVV3M	3-28	290
HFVV-3M	3-10	260
HHJ-A	11-17	40
HLUH	8-9	190
HMLVV-5M	8-5	270
HMVV-5	8-3	60
HMVV-5M	8-3	60
HMVV-5M	8-5	280
HMVV-5M	8-6A	110
HPF1260-6-58	4-3	90
HR, DF-14R	6-6	90
J-10386-2	3-30	–
J-2214-4	3-30	60
J-2216-18	3-30	10
J-2218-61	3-30	20
J-2309-7	3-30	50
J3459-8	8-9	140
J3459-8	8-10	140
J-7763-26	3-30	30
J-7766-2	3-30	40
J-D4N-300M	6-14	90
JE-1	5-1	320
K3N	3-28	250
K3N	3-28	250
K3N	3-28	250
K3N	3-28	250
K9000S-1A	3-22	300
K-9000S-1A	3-24	340
K94RA	12-1A	110A
KN500B1/8	11-8	160
KN500B1/8	11-9	125
KN500B1/8	11-5	30
KN500B1/8	11-7	360
KN500B1/8	11-1	420
KN500B1/8	11-2	320
KN500B1/8	11-3	320
KN500B1/8	11-4	–
KN500B1/8	11-6	340
KP4A	3-11	230
KP4A	3-11	340
KUP-14D55-24	6-14	10
KUP-14D55-472	6-14	10
L-141C	11-5	330
L-18X	4-2	60
LDF-6-228	8-5	570
LED-40-1J-HG2-SBMMD	11-9	10
LED-40-1J-HG2-SBMMF	11-9	5
LHSSE-5	8-3A	250
LW-12878-4S260	3-23	480
LW-13464	3-3	240
LW-13476	3-3	190
LW-13646	3-3	–
LW-13807	3-3	310

UNCONTROLLED COPY WHEN DOWNLOADED OR PRINTED

Visit www.enstromhelicopter.com for instructions to order an original manual and to register for email notification updates.

PART NUMBER INDEX
SECTIONS 3 THROUGH 6, 9, 10, AND 11
FIGURES 7-4C, 7-4D, 8-1 THROUGH 8-11, 12-1A THROUGH 12-2B,12-5, 12-6A, AND 12-10

Part Number	Figure	Item
LW-13807	3-5	90
LW-14485	3-3	230
LW-16567	3-28	141
LW-18959-175-34	11-19	65
LW-18959-175-34	11-17	–
LWB-22-6-58	4-3	90
M-111	11-19	105
M-111T	11-19	150
M12883/41-14	6-14	100
M144E	5-6	50
M-5050T	11-19	40
M81934/1-08C012	8-3A	430
M81935/1-08K	5-3	520
M83248/1-008	12-1A	120
M83248-2-010	3-26	30
M83536/10-015M	6-14	90
M83536/10-024M	6-14	90
MC1-106-140	11-16	20
MC1-A106B	11-16	30
MIL-DTL-5593	11-8	–
MM-113-3/8	11-19	140
MP-100-012-70	11-1	310
MP-160-012-100	11-6	–390A
MP-160-012-70	11-1	40
MP-160-012-70	11-2	200
MP-160-012-70	11-3	200
MP-160-012-70	11-4	200
MP-160-012-70	11-5	210
MP-160-012-70	11-6	390
MRB-2400	9-2	42
MS15001-1	4-1	260
MS16555-27	4-2.1	30
MS16562-211	8-9	210
MS16562-211	8-10	210
MS16562-213	5-5	70
MS16562-213	8-9	240
MS16562-213	8-10	240
MS16562-215	4-3	70
MS16633-4012	7-4C	300
MS16998-10L	6-11	–
MS17825-3	12-6A	220
MS17825-3	3-10	240
MS17825-3	3-11	410
MS17825-3	3-13	100
MS17825-3	3-15	50
MS17825-4	12-5	110
MS17825-4	12-6A	150
MS17825-4	3-11	310
MS17825-4	5-1	290
MS17825-4	5-3	400
MS17825-4	8-3	90
MS17825-4	8-3A	360
MS17825-4	8-4	270
MS17825-4	8-5	410
MS17825-5	12-6A	60
MS17825-5	12-6B	240
MS17825-5	5-1	440
MS17825-5	5-2	100
MS17825-5	8-3	40
MS17825-5	8-4	180
MS17825-5	8-5	460
MS17825-5	8-5A	120
MS17825-5	8-6A	190
MS17825-6	8-5A	70
MS17826-4	8-2	60
MS17984C305	7-4C	-75
MS18066-14	8-1	90
MS18066-8	7-4C	270
MS20073-05-A12	8-4	260
MS20073-05-A6	8-4	250
MS20074-03-04	5-3	430
MS20074-05-05	3-29	70
MS20074-05-06	4-2	340
MS20074-05-12	4-2	350
MS20074-304	8-2	10
MS201044N3	3-6	170

UNCONTROLLED COPY WHEN DOWNLOADED OR PRINTED

Visit www.enstromhelicopter.com for instructions to order an original manual and to register for email notification updates.

PART NUMBER INDEX
SECTIONS 3 THROUGH 6, 9, 10, AND 11
FIGURES 7-4C, 7-4D, 8-1 THROUGH 8-11, 12-1A THROUGH 12-2B,12-5, 12-6A, AND 12-10

Part Number	Figure	Item
MS20364-1032	8-5	260
MS20364-1032	8-5A	160
MS20364-1032	8-6	60
MS20364-1032	8-7	70
MS20364-428	8-8	60
MS20392-2C11	3-28	300
MS20392-2C17	7-4C	60
MS20426A3-3.5	3-20	–
MS20426A3-3.5	3-20A	–
MS20426A3-3.5	3-20B	–
MS20426A3-4	3-19	–
MS20426A3-4	3-20	–
MS20426A3-4	3-20	–
MS20426A3-4	3-20	–
MS20426a3-4	3-20	–
MS20426A3-4	3-20	–
MS20426A3-4	3-20A	–
MS20426A3-4	3-20A	–
MS20426a3-4	3-20A	–
MS20426A3-4	3-20A	–
MS20426A3-4	3-20B	–
MS20426A3-4	3-20B	–
MS20426A3-4	3-20B	–
MS20426A3-4	3-20B	–
MS20426A3-4	3-20B	–
MS20426A3-4	3-20B	–
MS20426a3-4	3-20B	–
MS20426A3-4	3-20B	–
MS20426A3-4	9-3	–
MS20426A3-4	9-3	–
MS20426A3-4	9-4	–
MS20426A3-4	9-4	–
MS20426AD3-3	3-17	80
MS20426AD3-3	3-20	–
MS20426AD3-3	3-20	–
MS20426AD3-3	3-20	–
MS20426AD3-3	3-20	–
MS20426AD3-3	3-20A	–
MS20426AD3-3	3-20A	–
MS20426AD3-3	3-20A	–
MS20426AD3-3	3-20B	–
MS20426AD3-3	3-20B	–
MS20426AD3-3	3-20B

PART NUMBER INDEX
SECTIONS 3 THROUGH 6, 9, 10, AND 11
FIGURES 7-4C, 7-4D, 8-1 THROUGH 8-11, 12-1A THROUGH 12-2B,12-5, 12-6A, AND 12-10

Part Number	Figure	Item
MS20426AD3-4	3-20B	–
MS20426AD3-4	3-20B	–
MS20426AD3-4	3-20B	–
MS20426AD3-4	3-20B	–
MS20426AD3-4	3-20B	–
MS20426AD3-4	3-20B	–
MS20427M4-7	3-21	–
MS20470A3-3	3-20	–
MS20470A3-3	3-20A	–
MS20470A3-3	3-20B	–
MS20470A3-4	3-19	–
MS20470A3-4	3-20	–
MS20470A3-4	3-20	–
MS20470A3-4	3-20A	–
MS20470AD3-3	3-20	–
MS20470AD3-3	3-20A	–
MS20470AD3-3	3-5.1	20
MS20470AD3-4	3-18	–
MS20470AD3-4	3-20	–
MS20470AD3-4	3-20	–
MS20470AD3-4	3-20A	–
MS20470AD3-4	3-20A	–
MS20470AD3-4	3-20B	–
MS20470AD3-4	3-20B	–
MS20470AD3-4	3-20B	–
MS20470AD3-4	3-20B	–
MS20470AD3-4	3-20B	–
MS20470AD3-4	4-2	–
MS20470AD3-4	6-7	140
MS20470AD4-4	3-20	–
MS20470AD4-4	3-20	–
MS20470AD4-4	3-20A	–
MS20470AD4-4	3-20A	–
MS20470AD4-4	3-20B	–
MS20470AD4-4	3-20B	–
MS20470AD4-4	3-20B	–
MS20470AD4-5	3-20	–
MS20470AD4-5	3-20A	–
MS20470AD4-5	3-20B	–
MS20470AD5-7	3-21	–
MS20500-1032	3-29	150
MS20500-428	3-29	160
MS20500-524	3-29	170
MS20500-524	3-3	180
MS20615-3M10	3-26	130
MS20812-4D	3-24	350
MS20819-4D	11-15	–
MS20819-4D	11-15	–
MS20819-4D	11-15	–
MS20819-4D	11-15	–
MS20819-4D	11-15	–
MS20819-4D	11-15	–
MS20819-4D	11-15	–
MS20819-4D	11-15	–
MS20819-4D	3-24	–
MS20822-2	11-10	30
MS20822-4	3-23	200
MS20822-4D	3-4	220
MS20822-6-6	3-23	240
MS20822-6-6	3-8	100
MS20822-6D	3-26	180
MS20822-6D	5-6	90
MS20823	3-22	420
MS20823-4	3-23	420
MS20823-4	3-4	190
MS20823-4D	11-10	120
MS20823-6	3-23	410
MS-20823-6D	3-6	20
MS20913-1	3-23	280
MS20913-1D	3-22	340
MS20995C20	12-6B	–280
MS20995C25	11-19	165
MS20995C32	12-1A	–250
MS20995C32	3-23	–
MS20995C32	3-28	–
MS20995C32	3-3	–

UNCONTROLLED COPY WHEN DOWNLOADED OR PRINTED

Visit www.enstromhelicopter.com for instructions to order an original manual and to register for email notification updates.

PART NUMBER INDEX
SECTIONS 3 THROUGH 6, 9, 10, AND 11
FIGURES 7-4C, 7-4D, 8-1 THROUGH 8-11, 12-1A THROUGH 12-2B,12-5, 12-6A, AND 12-10

Part Number	Figure	Item
MS20995C32	3-3	–
MS20995C32	3-3	–
MS20995C32	4-4	–
MS20995C32	5-2	–
MS20995C32	5-6	–
MS20995-C32	3-26	–
MS20995C41	3-3	–
MS21042-3	3-27	70
MS21042-3	3-28	110
MS21042-3	3-28	110
MS21042-3	3-28	50
MS21042-3	7-4C	130
MS21042-3	7-4C	470
MS21044N04	11-8	120
MS21044N04	11-9	–
MS21044N04	11-7	230
MS21044N06	3-17	130
MS21044N06	6-11	120
MS21044N08	3-10	100
MS21044N08	6-11	221
MS21044N08	6-2	–
MS21044N08	8-6	120
MS21044N08	8-6A	60
MS21044N3	11-8	300
MS21044N3	11-9	225
MS21044N3	12-1B	90
MS21044N3	12-2B	–300
MS21044N3	3-10	190
MS21044N3	3-10	40
MS21044N3	3-11	100
MS21044N3	3-12	50
MS21044N3	3-20	520
MS21044N3	3-20A	520
MS21044N3	3-20B	520
MS21044N3	3-23	580
MS21044N3	3-6	270
MS21044N3	3-7	140
MS21044N3	5-3	220
MS21044N3	6-2	–
MS21044N3	6-2	–
MS21044N3	9-5	80
MS21044N3	9-5	125
MS21044N3	11-7	630
MS21044N3	11-11	90
MS21044N4	12-1B	120
MS21044N4	5-4	410
MS21044N4	6-2	–
MS21044N4	7-4C	90
MS21044N4	9-5	30
MS21044N5	4-1	140
MS21044N6	5-4	380
MS21045L3	3-3	–
MS21045L5	3-3	180
MS21061L08K	3-20	–
MS21069-06	3-18	–
MS21069-06	3-20	–
MS21069-06	3-20	–
MS21069-06	3-20	–
MS21069-06	3-20A	–
MS21069-06	3-20A	–
MS21069-06	3-20A	–
MS21069-06	3-20B	–
MS21069-06	3-20B	–
MS21069-06	3-20B	–
MS21069-06K	3-20	–
MS21069-06K	3-20	–
MS21069-06K	3-20A	–
MS21069-06K	3-20A	–
MS21069-06K	3-20B	–
MS21069-06K	3-20B	–
MS21069-08	3-20	–
MS21069-08	3-20A	–
MS21069-08	3-20B	–
MS21071-06	3-18	–
MS21071-06	3-18	–
MS21071-06	3-20	–

UNCONTROLLED COPY WHEN DOWNLOADED OR PRINTED

Visit www.enstromhelicopter.com for instructions to order an original manual and to register for email notification updates.

PART NUMBER INDEX
SECTIONS 3 THROUGH 6, 9, 10, AND 11
FIGURES 7-4C, 7-4D, 8-1 THROUGH 8-11, 12-1A THROUGH 12-2B,12-5, 12-6A, AND 12-10

Part Number	Figure	Item
MS21071-06	3-20A	–
MS21071-06	3-20B	–
MS21078-06	3-20	–
MS21078-06	3-20A	–
MS21078-06	3-20B	–
MS21078-08	3-19	–
MS21078-08	3-19	–
MS21078-08	3-20B	–
MS21078-08	3-20B	–
MS21078-08K	3-19	–
MS21078-08K	3-19	30
MS21078-08K	3-20	–
MS21078-08K	3-20A	–
MS21078-3	3-20	–
MS21078-3	3-20	–
MS21078-3	3-20	–
MS21078-3	3-20A	–
MS21078-3	3-20A	–
MS21078-3	3-20B	–
MS21078-3	3-20B	–
MS21078-3	3-20B	–
MS21078-3	3-20B	–
MS21078-3	3-20B	–
MS21080-06	3-20	–
MS21080-06	3-20	–
MS21080-06	3-20A	–
MS21080-06	3-20A	–
MS21080-06	3-20B	–
MS21080-06	3-20B	–
MS21080-08	3-19	–
MS21080-08K	3-19	–
MS21080-3	3-20	–
MS21080-3	3-20	–
MS21080-3	3-20A	–
MS21080-3	3-20B	–
MS21080-3	3-20B	–
MS21080-3	3-20B	–
MS21083N06	11-8	40
MS21083N06	11-9	–
MS21083N06	11-9	–
MS21083N06	11-9	–
MS21083N06	6-11	–
MS21083N06	6-14	40
MS21083N06	6-4	–
MS21083N06	6-4	–
MS21083N06	6-4	–
MS21083N06	6-4	–
MS21083N06	6-4	–
MS21083N06	6-4	–
MS21083N06	6-6	190
MS21083N06	12-10	330
MS21083N06	11-7	160
MS21083N08	11-8	315
MS21083N08	11-9	240
MS21083N08	11-19	245
MS21083N08	6-11	160
MS21083N08	6-11	80
MS21083N08	6-5	230
MS21083N08	6-5	32
MS21083N08	6-6	340
MS21083N08	6-7	110
MS21083N08	6-7	210
MS21083N08	11-7	670
MS21083N08	11-11	200
MS21083N3	3-11	160
MS21083N3	3-13	60
MS21083N3	3-21	50
MS21083N3	3-26	220
MS21083N3	3-5.1	130
MS21083N3	3-5.1	210
MS21083N3	4-2	–
MS21083N3	5-1	150
MS21083N3	5-3	460
MS21083N3	5-5	300
MS21083N3	6-13	–
MS21083N3	6-13	–

UNCONTROLLED COPY WHEN DOWNLOADED OR PRINTED

Visit www.enstromhelicopter.com for instructions to order an original manual and to register for email notification updates.

PART NUMBER INDEX
SECTIONS 3 THROUGH 6, 9, 10, AND 11
FIGURES 7-4C, 7-4D, 8-1 THROUGH 8-11, 12-1A THROUGH 12-2B,12-5, 12-6A, AND 12-10

Part Number	Figure	Item
MS21083N3	6-13	–
MS21083N3	6-13	188
MS21083N3	6-13	195
MS21083N3	6-2	–
MS21083N3	6-2	–
MS21083N3	6-3	40
MS21083N3	7-4C	460
MS21083N3	8-11	70
MS21083N3	8-6A	150
MS21083N3	8-7	–
MS21083N4	3-22	180
MS21083N4	3-22	290
MS21083N4	3-23	190
MS21083N4	5-1	490
MS21083N4	5-1	70
MS21083N4	5-5	140
MS21083N4	8-11	10
MS21083N4	8-11	150
MS21083N4	12-10	300
MS21083N5	5-4	230
MS21083N6	4-2	320
MS21083N6	5-3	330
MS21240-08C12	8-3A	430
MS21242S8	5-3	520
MS21242S8K	4-4	200
MS21242S8K	5-3	520
MS21250-06042	5-6	250
MS21250-06044	5-6	250
MS21299C6	4-3	100
MS21913J4	11-19	145
MS21919CJ15	11-14	–
MS21919DF12	11-17	130
MS21919DF-12	11-16	100
MS21919-DF12	3-1	50
MS21919-DF12	3-2	80
MS21919-DF12	3-6	80
MS21919DF16	11-17	140
MS21919DF-3	11-16	110
MS21919-DF6	3-6	80
MS21919-DG12	6-13	20
MS21919-DG-15	11-14	–
MS21919DG3	11-17	90
MS21919DG4	3-24	170
MS21919F10	11-17	120
MS21919-F10	3-4	30
MS21919-F12	3-4	270
MS21919F4	11-11	60
MS21919F4	11-17	100
MS21919-F4	3-4	240
MS21919F6	11-17	110
MS21919-F6	3-4	250
MS21919F8	10-4	60
MS21919-F8	10-3	–
MS21919-F8	3-4	260
MS21919-G38	10-2	–
MS21919WCJ10	3-23	390
MS21919WCJ10	3-23	481
MS21919WCJ10	3-4	30
MS21919WCJ10	11-17	120
MS21919WCJ12	3-20	560
MS21919WCJ12	3-20A	560
MS21919WCJ12	3-20B	560
MS21919WCJ12	3-20B	560
MS21919WCJ12	3-23	70
MS21919WCJ12	3-24	220
MS21919WCJ12	3-4	270
MS21919WCJ12	6-2	60
MS21919WCJ12	11-17	130
MS21919WCJ14	3-24	310
MS21919WCJ16	3-23	380
MS21919WCJ16	11-17	140
MS21919WCJ3	3-24	115
MS21919WCJ3	11-17	90
MS21919WCJ4	3-24	170
MS21919WCJ4	3-4	240
MS21919WCJ4	11-17	100

UNCONTROLLED COPY WHEN DOWNLOADED OR PRINTED

Visit www.enstromhelicopter.com for instructions to order an original manual and to register for email notification updates.

PART NUMBER INDEX
SECTIONS 3 THROUGH 6, 9, 10, AND 11
FIGURES 7-4C, 7-4D, 8-1 THROUGH 8-11, 12-1A THROUGH 12-2B,12-5, 12-6A, AND 12-10

Part Number	Figure	Item
MS21919WCJ6	3-24	300
MS21919WCJ6	3-4	250
MS21919WCJ6	11-17	110
MS21919WCJ8	3-4	260
MS21919WDF12	3-5	40
MS21919WDF3	3-22	460
MS21919WDG12	3-24	–
MS21919WDG12	3-24	220
MS21919WDG12	3-5.1	180
MS21919WDG12	6-13	20
MS21919WDG-12	11-18	35
MS21919WDG-12	12-2B	80
MS21919WDG14	3-24	310
MS21919WDG14	3-5.1	100
MS21919WDG-14	11-18	30
MS21919WDG-14	12-2B	70
MS21919WDG15	11-15	125
MS21919WDG2	6-5	215
MS21919WDG3	10-4	140
MS21919WDG3	10-4	240
MS21919WDG3	3-24	–
MS21919WDG3	6-7	80
MS21919WDG-5	11-18	25
MS21919WDG-5	12-2B	60
MS21919WDG6	11-19	250
MS21919WDG6	3-24	300
MS21919WF10	3-22	390
MS21919WF12	3-20	560
MS21919WF12	3-20A	560
MS21919WF12	3-20B	560
MS21919WF12	3-22	80
MS21919WF12	3-7	90
MS21919WF12	6-1	120
MS21919WF12	6-1	60
MS21919WF14	3-22	90
MS21919WF14	3-7	90
MS21919WF16	3-22	380
MS21919WF16	5-5	280
MS21919WF18	3-7	40
MS21919WF4	11-15	130
MS21919WF4	3-20	620
MS21919WF4	3-20A	620
MS21919WF4	3-20B	620
MS21919WF-4	3-24	170
MS21919WF6	3-22	70
MS21919WG38	10-4	250
MS21919WG38	10-4	420
MS21919WG38	10-4	70
MS24586C234	3-11	480
MS24586C311	3-11	470
MS24586-C346	3-11	200
MS24665-1013	12-5	100
MS24665-1013	8-2	70
MS24665-1013	8-3A	370
MS24665-1013	8-4	300
MS24665-151	12-5	210
MS24665-151	12-6A	250
MS24665-151	12-6B	250
MS24665-151	3-10	250
MS24665-151	3-11	320
MS24665-151	3-13	110
MS24665-151	3-14	60
MS24665-151	3-15	60
MS24665-151	5-1	300
MS24665-151	5-2	110
MS24665-151	5-3	410
MS24665-151	5-5	170
MS24665-151	8-3	100
MS24665-151	8-4	190
MS24665-151	8-5	420
MS24665-151	8-5A	130
MS24665-151	8-6A	200
MS24665-152	8-3	50
MS24665-152	8-5	470
MS24665-153	3-24	530
MS24665-153	3-28	305

UNCONTROLLED COPY WHEN DOWNLOADED OR PRINTED

Visit www.enstromhelicopter.com for instructions to order an original manual and to register for email notification updates.

PART NUMBER INDEX
SECTIONS 3 THROUGH 6, 9, 10, AND 11
FIGURES 7-4C, 7-4D, 8-1 THROUGH 8-11, 12-1A THROUGH 12-2B,12-5, 12-6A, AND 12-10

Part Number	Figure	Item
MS24665-155	12-6B	90
MS24665-300	3-28	320
MS24665-300	3-30	60
MS24665-300	3-30	60A
MS24665-300	8-1	130
MS24665-300	8-5A	80
MS24665-302	4-3	170
MS24665-302	8-1	140
MS24665-302	8-3A	410
MS24665-304	5-3	100
MS24665-360	4-2	200
MS24665-90	3-28	375
MS24674-45	3-8	180
MS24677-52	4-2	350
MS24693-BB26	11-9	105
MS24693-BB26	11-9	175
MS24693-BB26	11-6	430
MS24693-BB50	11-8	370
MS24693-BB50	11-7	810
MS24693S26	9-3	80
MS24693S26	9-4	190
MS24693-S287	4-2	–
MS24693-S48	7-4C	240
MS24693-S51	11-20	120
MS24694-50	11-8	–
MS24694-52	3-12	60
MS24694-80	3-12	80
MS24694-S52	7-4C	140
MS24694-S52	9-5	115
MS24694-S58	6-13	192
MS25171-1S	6-13	240
MS25171-3S	6-13	230
MS25244-5	11-6	410
MS25331-8	11-5	310
MS26574-2 1/2	11-5	230
MS26574-20	11-5	240
MS26574-5	6-3	–
MS26574-7 1/2	11-5	220
MS27039-0806	8-6	100
MS27039-0806	8-6A	40
MS27039-0807	6-5	100
MS27039-0808	6-5	110
MS27039-0808	11-11	180
MS27039-1-09	7-4C	110
MS27039-808	11-16	60
MS27404-4D	11-8	–
MS28775-015	3-5	–
MS28775-018	12-1A	40
MS28775-026	3-9	60
MS28775-029	4-2	140
MS28775-111	12-5	40
MS28775-113	12-1A	80
MS28775-116	6-11	290
MS28775-214	3-9	70
MS28775-218	3-9	40
MS28778-12	3-23	130
MS28778-2	12-1A	60
MS28778-2	3-26	80
MS28778-3	12-1A	20
MS28778-3	5-6	–
MS28778-4	5-6	–
MS28778-6	3-22	–
MS28778-6	3-22	–
MS28778-6	3-23	360
MS28778-8	3-7	101
MS28778-8	3-7	11
MS28778-8	3-7	321
MS28884A-6	3-4	140
MS29512-06	3-22	–
MS29512-06	3-22	–
MS29512-06	3-22	–
MS29513-010	3-26	60
MS29513-113	3-26	40
MS30526-230	3-24	130
MS33737-16C	11-8	70
MS33737-16C	11-7	110

UNCONTROLLED COPY WHEN DOWNLOADED OR PRINTED

Visit www.enstromhelicopter.com for instructions to order an original manual and to register for email notification updates.

PART NUMBER INDEX
SECTIONS 3 THROUGH 6, 9, 10, AND 11
FIGURES 7-4C, 7-4D, 8-1 THROUGH 8-11, 12-1A THROUGH 12-2B,12-5, 12-6A, AND 12-10

Part Number	Figure	Item
MS35190-253	11-8	305
MS35190-253	11-9	230
MS35190-253	11-7	650
MS35206-219	8-9	60
MS35206-219	8-10	60
MS35206-228	6-11	100
MS35206-228	6-4	300
MS35206-228	11-20	40
MS35206-229	11-20	50
MS35206-230	3-26	110
MS35206-230	6-11	–
MS35206-244	11-8	395
MS35206-244	11-9	305
MS35206-244	3-17	140
MS35206-244	3-19	–
MS35206-244	3-20	430
MS35206-244	3-20A	430
MS35206-244	3-20B	430
MS35206-244	3-6	230
MS35206-244	3-7	250
MS35206-244	3-7	280
MS35206-244	3-9	90
MS35206-244	6-11	61
MS35206-244	6-2	–
MS35206-244	6-2	–
MS35206-244	11-7	860
MS35206-245	10-4	430
MS35206-245	11-15	105
MS35206-245	11-19	235
MS35206-245	11-19	80
MS35206-245	12-2B	90
MS35206-245	3-19	140
MS35206-245	3-20	570
MS35206-245	3-20A	570
MS35206-245	3-20B	570
MS35206-245	3-23	482
MS35206-245	3-24	–
MS35206-245	3-24	–
MS35206-245	3-24	–
MS35206-245	3-24	130
MS35206-245	11-17	150
MS35206-246	11-15	115
MS35206-246	3-22	400
MS35206-246	3-23	80
MS35206-246	3-24	240
MS35206-246	3-5	50
MS35206-246	3-6	90
MS35206-246	3-7	50
MS35206-246	6-1	130
MS35206-246	6-1	70
MS35206-246	6-2	–
MS35206-246	6-2	–
MS35206-246	6-2	–
MS35206-246	11-16	120
MS35206-247	11-8	410
MS35206-247	11-9	320
MS35206-247	11-15	140
MS35206-247	6-2	–
MS35206-247	11-7	770
MS35206-249	11-15	135
MS35206-249	11-14	110
MS35206-250	11-8	430
MS35206-250	11-9	340
MS35206-250	11-7	900
MS35206-251	11-15	100
MS35206-251	11-14	–
MS35207-262	3-5.1	110
MS35207-262	3-5.1	190
MS35207-262	6-2	–
MS35207-262	6-2	–
MS35207-262	12-10	250
MS35207-263	6-2	–
MS35207-263	6-2	–
MS35207-AR	12-10	250
MS35214-109	11-6	130
MS35214-15	11-7	210

UNCONTROLLED COPY WHEN DOWNLOADED OR PRINTED

Visit www.enstromhelicopter.com for instructions to order an original manual and to register for email notification updates.

PART NUMBER INDEX
SECTIONS 3 THROUGH 6, 9, 10, AND 11
FIGURES 7-4C, 7-4D, 8-1 THROUGH 8-11, 12-1A THROUGH 12-2B,12-5, 12-6A, AND 12-10

Part Number	Figure	Item
MS35214-15	11-8	–
MS35214-15	11-8	110
MS35214-15	11-9	–
MS35214-15	11-9	–
MS35214-25	11-6	220
MS35214-25	11-7	90
MS35214-25	11-8	55
MS35214-26	11-6	380
MS35214-26	11-7	140
MS35214-26	11-8	30
MS35214-26	11-9	–
MS35214-26	11-9	–
MS35214-26	11-9	53
MS35214-27	11-8	129
MS35214-27	11-9	–
MS35214-28	11-7	480
MS35214-28	11-8	225
MS35214-29	11-6	50
MS35214-30	11-5	–
MS35214-30	11-6	140
MS35214-30	11-7	200
MS35214-30	11-8	95
MS35214-30	11-9	–
MS35214-31	11-6	60
MS35214-31	11-7	100
MS35214-31	11-8	65
MS35214-31	11-9	–
MS35214-31	11-9	–
MS35214-31	11-9	–
MS35214-31	11-9	–
MS35214-44	11-8	515
MS35333-37	6-6	270
MS35333-39	3-20	410
MS35333-39	3-20A	410
MS35333-39	3-20B	410
MS35333-47	3-15	90
MS35333-47	3-24	450
MS35338-40	8-9	80
MS35338-40	8-10	80
MS35338-41	11-19	55
MS35338-41	3-16	100
MS35338-41	3-20	360
MS35338-41	3-20A	360
MS35338-41	3-20B	360
MS35338-41	11-5	–
MS35338-41	11-6	90
MS35338-41	11-20	70
MS35338-42	10-4	450
MS35338-42	11-8	415
MS35338-42	11-9	325
MS35338-42	11-15	85
MS35338-42	11-19	90
MS35338-42	3-20	590
MS35338-42	3-20A	590
MS35338-42	3-20B	590
MS35338-42	3-22	120
MS35338-42	3-23	100
MS35338-42	3-24	–
MS35338-42	3-24	–
MS35338-42	3-24	–
MS35338-42	3-24	150
MS35338-42	3-4	280
MS35338-42	3-4	300
MS35338-42	3-5	70
MS35338-42	3-6	110
MS35338-42	3-9	110
MS35338-42	5-1	350
MS35338-42	6-1	–
MS35338-42	6-1	–
MS35338-42	6-1	–
MS35338-42	6-1	–
MS35338-42	6-13	–
MS35338-42	6-2	–
MS35338-42	6-2	–
MS35338-42	6-2	–
MS35338-42	11-7	780

UNCONTROLLED COPY WHEN DOWNLOADED OR PRINTED

Visit www.enstromhelicopter.com for instructions to order an original manual and to register for email notification updates.

PART NUMBER INDEX
SECTIONS 3 THROUGH 6, 9, 10, AND 11
FIGURES 7-4C, 7-4D, 8-1 THROUGH 8-11, 12-1A THROUGH 12-2B,12-5, 12-6A, AND 12-10

Part Number	Figure	Item
MS35338-42	11-7	910
MS35338-42	11-14	130
MS35338-42	11-16	70
MS35338-42	11-17	170
MS35338-43	3-1	80
MS35338-43	3-25	60
MS35338-43	6-2	–
MS35338-43	6-2	–
MS35338-43	9-5	50
MS35338-43	8-9	–
MS35338-43	8-10	–
MS35338-44	5-6	230
MS35338-44	6-2	–
MS35338-44	6-2	–
MS35338-44	6-2	–
MS35338-99	11-8	510
MS353630-42	3-7	70
MS35489-1	6-4	–
MS35489-10	3-24	–
MS35489-11	3-15	140
MS35489-11	11-17	60
MS35489-11	11-19	220
MS35489-14	11-19	180
MS35489-14	3-24	–
MS35489-4	6-11	–
MS35489-5	6-4	290
MS35489-6	6-10	70
MS35489-6	6-7	220
MS35489-6	6-7	70
MS35489-6	11-16	90
MS35489-6	11-17	80
MS35649-202	6-2	–
MS35649-2312	3-3	290
MS35649-242	8-9	90
MS35649-242	8-10	90
MS35649-262	11-19	60
MS35649-262	3-20	370
MS35649-262	3-20A	370
MS35649-262	3-20B	370
MS35649-262	3-26	120
MS35649-262	11-5	–
MS35649-262	11-6	80
MS35649-282	10-4	460
MS35649-282	11-8	420
MS35649-282	11-9	330
MS35649-282	11-15	90
MS35649-282	11-19	95
MS35649-282	12-2B	120
MS35649-282	3-20	600
MS35649-282	3-20A	600
MS35649-282	3-20B	600
MS35649-282	3-22	130
MS35649-282	3-23	110
MS35649-282	3-24	–
MS35649-282	3-24	–
MS35649-282	3-24	–
MS35649-282	3-24	140
MS35649-282	3-4	310
MS35649-282	3-5	80
MS35649-282	3-6	120
MS35649-282	3-7	80
MS35649-282	3-9	120
MS35649-282	5-1	370
MS35649-282	6-1	–
MS35649-282	6-1	–
MS35649-282	6-1	–
MS35649-282	6-1	–
MS35649-282	6-13	–
MS35649-282	6-2	–
MS35649-282	6-2	–
MS35649-282	6-2	–
MS35649-282	8-3A	290
MS35649-282	11-7	790
MS35649-282	11-14	140
MS35649-282	11-16	80
MS35649-282	11-17	180

UNCONTROLLED COPY WHEN DOWNLOADED OR PRINTED

Visit www.enstromhelicopter.com for instructions to order an original manual and to register for email notification updates.

PART NUMBER INDEX
SECTIONS 3 THROUGH 6, 9, 10, AND 11
FIGURES 7-4C, 7-4D, 8-1 THROUGH 8-11, 12-1A THROUGH 12-2B,12-5, 12-6A, AND 12-10

Part Number	Figure	Item
MS35650-302	9-5	55
MS35650-302	8-9	–
MS35650-302	8-10	–
MS35769-11	5-6	125
MS35769-6	5-6	140
MS35769-6	6-11	20
MS35769-9	12-1A	100
MS35769-9	5-6	120
MS35842-13	3-3	260
MS51500-B6-8	3-8	140
MS51525-B6-8	3-22	210
MS51525B6-8Z	3-23	120
MS51529B6S	3-22	360
MS51529B6S	3-23	350
MS51861-24	3-17	30
MS51861-24	3-17	60
MS51861-35	3-27	–
MS51861-35	3-28	–
MS51861-35	6-1	110
MS51861-35	6-1	50
MS51861-36	3-20	291
MS75028-22	11-17	30
MS9021-152	5-4	50
MS9352-03	3-22	460
MTK8	5-3	520
MW-3TM-29	3-14	30
N-09	4-3	10
N5000-137-S-PP	5-3	30
N5000-175-PP	12-1A	170
N5000-187-ZD	12-2A	30
N5000-206-PP	12-1A	210
N5000-268-PP	12-6A	100
N5000-62-PP	11-18	110
N5000-62-PP	12-2B	190
N5000-62-PP	8-9	150
N5000-62-PP	8-10	150
N5000-87	8-9	290
N5000-87	8-10	290
N5000-87-PP	8-9	290
N5000-87-PP	8-10	290
N5002-100	12-10	100
N5002-125-PP	8-1	40
N5002-268-PP	12-6B	80
N5002-354-S-PP	5-4	310
N5108-56-PP	8-9	370
N5108-56-PP	8-10	370
NAJ-02BC	3-20A	–
NAJ1-02	3-26	–
NAJ1-02BC	3-20A	–
NAJ1-02BC	3-20A	–
NAJ17-02BC	3-20A	–
NAJ17-02BC	3-20B	–
NAJ17-82BC	3-19	–
NAJ17-82BC	3-20	–
NAJ17-82BC	3-20A	–
NAJ1-82BC	3-18	–
NAJ1-82BC	3-18	–
NAJ1-82BC	3-19	30
NAJ1-82BC	3-20A	–
NAJ1-82BC	3-20B	–
NAJ5-048	5-3	–
NAS1023D08K	3-18	–
NAS1023D08K	3-18	–
NAS1023D08K	3-20A	–
NAS1023D08K	3-20B	–
NAS1068A08	3-20	–
NAS1068A08	3-20A	–
NAS1068A08	3-20B	–
NAS1097AD3-3	3-18	–
NAS1097AD3-3	3-20	–
NAS1097AD3-3	3-20	–
NAS1097AD3-3	3-20A	–
NAS1097AD3-3	3-20A	–
NAS1097AD3-3	3-20B	–
NAS1097AD3-3	3-20B	–
NAS1097AD3-3	6-12	50

UNCONTROLLED COPY WHEN DOWNLOADED OR PRINTED

Visit www.enstromhelicopter.com for instructions to order an original manual and to register for email notification updates.

PART NUMBER INDEX
SECTIONS 3 THROUGH 6, 9, 10, AND 11
FIGURES 7-4C, 7-4D, 8-1 THROUGH 8-11, 12-1A THROUGH 12-2B,12-5, 12-6A, AND 12-10

Part Number	Figure	Item
NAS1097AD3-4	3-20	–
NAS1097AD3-4	3-20	–
NAS1097AD3-4	3-20	–
NAS1097AD3-4	3-20	–
NAS1097AD3-4	3-20	–
NAS1097AD3-4	3-20	–
NAS1097AD3-4	3-20	–
NAS1097AD3-4	3-20A	–
NAS1097AD3-4	3-20A	–
NAS1097AD3-4	3-20A	–
NAS1097AD3-4	3-20A	–
NAS1097AD3-4	3-20A	–
NAS1097AD3-4	3-20A	–
NAS1097AD3-4	3-20B	–
NAS1097AD3-4	3-20B	–
NAS1097AD3-4	3-20B	–
NAS1097AD3-4	3-20B	–
NAS1097AD3-4	3-20B	–
NAS1097AD3-4	3-20B	–
NAS1101-08-6	8-7	–
NAS1101-08-6	8-10	380
NAS1101-08-8	8-9	130
NAS1101-08-8	8-9	380
NAS1101-08-8	8-10	130
NAS1101-3-10	8-3A	260
NAS1101-3-10	8-9	20
NAS1101-3-10	8-10	20
NAS1101-3-8	8-9	–
NAS1101-3-8	8-10	–
NAS1149C0332R	12-2A	80
NAS1149C0332R	11-11	80
NAS1149C0363R	3-29	110
NAS1149C0432R	12-5	80
NAS1149C0463R	12-5	60
NAS1149C0463R	12-5	70
NAS1149C0463R	5-3	160
NAS1149C0563R	3-29	140
NAS1149C0632R	3-8	170
NAS1149C1290R	4-2	260
NAS1149C1290R	5-3	470
NAS1149D0316H	3-26	210
NAS1149D0316H	7-4C	120
NAS1149D0316J	9-5	45
NAS1149D0316J	9-5	65
NAS1149D0463J	11-20	140
NAS1149D0563H	4-1	30
NAS1149D0563H	8-4	220
NAS1149D0663H	4-2	310
NAS1149DN832H	4-1	160
NAS1149DN832H	4-2	230
NAS1149DN832H	4-2	40
NAS1149DN832H	6-11	220
NAS1149F0316P	6-2	–
NAS1149F0316P	8-11	60
NAS1149F0316P	12-10	240
NAS1149F0332P	11-9	215
NAS1149F0332P	12-1A	230
NAS1149F0332P	12-6A	200
NAS1149F0332P	12-6B	270
NAS1149F0332P	3-1	60
NAS1149F0332P	3-10	150
NAS1149F0332P	3-10	180
NAS1149F0332P	3-12	40
NAS1149F0332P	3-13	50
NAS1149F0332P	3-14	20
NAS1149F0332P	3-15	20
NAS1149F0332P	3-20	575
NAS1149F0332P	3-20A	575
NAS1149F0332P	3-20B	575
NAS1149F0332P	3-20B	575
NAS1149F0332P	3-24	540
NAS1149F0332P	3-25	70
NAS1149F0332P	3-5.1	120
NAS1149F0332P	3-5.1	200
NAS1149F0332P	3-6	260
NAS1149F0332P	3-7	160

UNCONTROLLED COPY WHEN DOWNLOADED OR PRINTED

Visit www.enstromhelicopter.com for instructions to order an original manual and to register for email notification updates.

PART NUMBER INDEX
SECTIONS 3 THROUGH 6, 9, 10, AND 11
FIGURES 7-4C, 7-4D, 8-1 THROUGH 8-11, 12-1A THROUGH 12-2B,12-5, 12-6A, AND 12-10

Part Number	Figure	Item
NAS1149F0332P	3-7	260
NAS1149F0332P	3-9	150
NAS1149F0332P	5-1	130
NAS1149F0332P	5-2	60
NAS1149F0332P	5-3	200
NAS1149F0332P	5-3	440
NAS1149F0332P	5-5	260
NAS1149F0332P	6-13	–
NAS1149F0332P	6-13	–
NAS1149F0332P	6-13	187
NAS1149F0332P	6-13	194
NAS1149F0332P	6-13	40
NAS1149F0332P	6-13	60
NAS1149F0332P	6-2	–
NAS1149F0332P	6-2	–
NAS1149F0332P	6-2	–
NAS1149F0332P	6-2	–
NAS1149F0332P	6-3	30
NAS1149F0332P	8-11	55
NAS1149F0332P	8-3A	270
NAS1149F0332P	8-5	250
NAS1149F0332P	8-5A	150
NAS1149F0332P	8-6	50
NAS1149F0332P	8-6A	140
NAS1149F0332P	8-7	60
NAS1149F0332P	9-5	15
NAS1149F0332P	11-7	620
NAS1149F0332P	12-10	–
NAS1149F0363P	11-8	320
NAS1149F0363P	11-9	245
NAS1149F0363P	12-1B	70
NAS1149F0363P	12-2B	270
NAS1149F0363P	12-2B	–290
NAS1149F0363P	3-11	140
NAS1149F0363P	3-11	400
NAS1149F0363P	3-11	90
NAS1149F0363P	3-12	30
NAS1149F0363P	3-20	510
NAS1149F0363P	3-20A	510
NAS1149F0363P	3-20B	510
NAS1149F0363P	3-23	570
NAS1149F0363P	3-28	340
NAS1149F0363P	3-6	160
NAS1149F0363P	3-7	130
NAS1149F0363P	5-1	450
NAS1149F0363P	5-3	210
NAS1149F0363P	6-13	–
NAS1149F0363P	6-13	193
NAS1149F0363P	8-2	20
NAS1149F0363P	8-9	30
NAS1149F0363P	8-10	30
NAS1149F0363P	9-5	120
NAS1149F0363P	11-7	640
NAS1149F0432P	3-11	360
NAS1149F0432P	3-20	390
NAS1149F0432P	3-20	460
NAS1149F0432P	3-20	540
NAS1149F0432P	3-20A	390
NAS1149F0432P	3-20A	460
NAS1149F0432P	3-20A	540
NAS1149F0432P	3-20B	390
NAS1149F0432P	3-20B	460
NAS1149F0432P	3-20B	540
NAS1149F0432P	3-22	170
NAS1149F0432P	3-22	170
NAS1149F0432P	3-29	120
NAS1149F0432P	5-1	20
NAS1149F0432P	5-5	110
NAS1149F0432P	5-7	75
NAS1149F0432P	6-13	–
NAS1149F0432P	6-2	–
NAS1149F0432P	6-2	–
NAS1149F0432P	6-2	–
NAS1149F0432P	6-2	–
NAS1149F0432P	8-11	140
NAS1149F0432P	8-2	50

UNCONTROLLED COPY WHEN DOWNLOADED OR PRINTED

Visit www.enstromhelicopter.com for instructions to order an original manual and to register for email notification updates.

PART NUMBER INDEX
SECTIONS 3 THROUGH 6, 9, 10, AND 11
FIGURES 7-4C, 7-4D, 8-1 THROUGH 8-11, 12-1A THROUGH 12-2B,12-5, 12-6A, AND 12-10

Part Number	Figure	Item
NAS1149F0432P	8-4	240
NAS1149F0432P	8-8	40
NAS1149F0432P	12-10	260
NAS1149F0463P	12-5	200
NAS1149F0463P	3-11	350
NAS1149F0463P	3-22	280
NAS1149F0463P	3-23	300
NAS1149F0463P	4-4	160
NAS1149F0463P	4-4	310
NAS1149F0463P	5-1	280
NAS1149F0463P	5-3	390
NAS1149F0463P	5-4	400
NAS1149F0463P	5-5	330
NAS1149F0463P	5-6	240
NAS1149F0463P	8-3	80
NAS1149F0463P	8-4	290
NAS1149F0463P	8-5	380
NAS1149F0463P	8-8	150
NAS1149F0532P	12-6A	50
NAS1149F0532P	12-6B	220
NAS1149F0532P	3-11	–
NAS1149F0532P	3-29	130
NAS1149F0532P	4-2	360
NAS1149F0532P	5-1	410
NAS1149F0532P	6-13	–
NAS1149F0532P	8-4	210
NAS1149F0532P	8-5	450
NAS1149F0532P	8-5A	100
NAS1149F0563P	8-4	170
NAS1149F0563P	12-6A	–55
NAS1149F0563P	12-6B	–230
NAS1149F0563P	4-1	60
NAS1149F0563P	4-2	360
NAS1149F0563P	5-1	420
NAS1149F0563P	5-2	90
NAS1149F0563P	5-4	220
NAS1149F0563P	8-3	30
NAS1149F0563P	8-5	440
NAS1149F0563P	8-6A	170
NAS1149F0632P	3-10	110
NAS1149F0632P	5-4	370
NAS1149F0632P	8-1	110
NAS1149F0663P	5-6	270
NAS1149F0732P	3-10	120
NAS1149F0732P	3-14	110
NAS1149F0732P	3-15	130
NAS1149F0732P	3-24	200
NAS1149F0732P	3-30	80
NAS1149F0732P	8-1	100
NAS1149F0763P	3-30	70
NAS1149F0763P	11-11	120
NAS1149F0763P	11-15	20
NAS1149F0763P	12-10	340
NAS1149F0863P	3-24	200
NAS1149F0863P	5-4	160
NAS1149F0963P	3-2	220
NAS1149F1232P	3-10	110
NAS1149F1232P	3-15	120
NAS1149F1232P	3-24	440
NAS1149FN316P	3-20	–
NAS1149FN316P	3-20	–
NAS1149FN316P	3-20	–
NAS1149FN316P	3-20A	–
NAS1149FN316P	3-20A	–
NAS1149FN316P	3-20A	–
NAS1149FN316P	3-20B	–
NAS1149FN316P	3-26	140
NAS1149FN316P	6-7	150
NAS1149FN416P	11-7	220
NAS1149FN416P	11-8	115
NAS1149FN416P	11-9	–
NAS1149FN416P	8-9	70
NAS1149FN416P	8-10	70
NAS1149FN616P	11-8	35
NAS1149FN616P	11-9	–
NAS1149FN616P	11-9	–

UNCONTROLLED COPY WHEN DOWNLOADED OR PRINTED

Visit www.enstromhelicopter.com for instructions to order an original manual and to register for email notification updates.

PART NUMBER INDEX
SECTIONS 3 THROUGH 6, 9, 10, AND 11
FIGURES 7-4C, 7-4D, 8-1 THROUGH 8-11, 12-1A THROUGH 12-2B,12-5, 12-6A, AND 12-10

Part Number	Figure	Item
NAS1149FN616P	11-9	–
NAS1149FN616P	11-19	50
NAS1149FN616P	3-16	90
NAS1149FN616P	3-17	100
NAS1149FN616P	3-17	120
NAS1149FN616P	3-17	40
NAS1149FN616P	3-17	70
NAS1149FN616P	6-11	–
NAS1149FN616P	6-11	–
NAS1149FN616P	6-4	–
NAS1149FN616P	6-4	–
NAS1149FN616P	6-4	–
NAS1149FN616P	6-4	–
NAS1149FN616P	6-4	–
NAS1149FN616P	6-4	–
NAS1149FN616P	6-6	220
NAS1149FN616P	11-5	–
NAS1149FN616P	11-6	100
NAS1149FN616P	11-7	150
NAS1149FN632P	3-20	350
NAS1149FN632P	3-20A	350
NAS1149FN632P	3-20B	350
NAS1149FN632P	6-11	110
NAS1149FN632P	6-6	180
NAS1149FN816F	3-9	100
NAS1149FN816P	10-4	440
NAS1149FN816P	3-10	90
NAS1149FN816P	3-17	150
NAS1149FN816P	3-17	190
NAS1149FN816P	3-2	180
NAS1149FN816P	3-20	440
NAS1149FN816P	3-20	580
NAS1149FN816P	3-20A	440
NAS1149FN816P	3-20A	580
NAS1149FN816P	3-20B	440
NAS1149FN816P	3-20B	580
NAS1149FN816P	3-22	110
NAS1149FN816P	3-23	90
NAS1149FN816P	3-23	483
NAS1149FN816P	3-24	–
NAS1149FN816P	3-24	–
NAS1149FN816P	3-24	–
NAS1149FN816P	3-24	160
NAS1149FN816P	3-4	290
NAS1149FN816P	3-5	60
NAS1149FN816P	3-6	100
NAS1149FN816P	3-7	60
NAS1149FN816P	4-1	310
NAS1149FN816P	5-1	360
NAS1149FN816P	6-1	–
NAS1149FN816P	6-1	–
NAS1149FN816P	6-1	–
NAS1149FN816P	6-2	–
NAS1149FN816P	6-2	–
NAS1149FN816P	6-2	–
NAS1149FN816P	6-2	–
NAS1149FN816P	6-4	–
NAS1149FN816P	6-5	–
NAS1149FN816P	6-5	–
NAS1149FN816P	6-5	225
NAS1149FN816P	6-5	31
NAS1149FN816P	6-6	330
NAS1149FN816P	6-7	100
NAS1149FN816P	8-6	110
NAS1149FN816P	8-6A	50
NAS1149FN816P	8-9	120
NAS1149FN816P	8-10	120
NAS1149FN816P	11-14	120
NAS1149FN816P	11-15	80
NAS1149FN816P	11-16	130
NAS1149FN816P	11-17	160
NAS1149FN816P	11-19	240
NAS1149FN816P	11-19	85
NAS1149FN832P	11-8	310
NAS1149FN832P	11-9	235

UNCONTROLLED COPY WHEN DOWNLOADED OR PRINTED

Visit www.enstromhelicopter.com for instructions to order an original manual and to register for email notification updates.

PART NUMBER INDEX
SECTIONS 3 THROUGH 6, 9, 10, AND 11
FIGURES 7-4C, 7-4D, 8-1 THROUGH 8-11, 12-1A THROUGH 12-2B,12-5, 12-6A, AND 12-10

Part Number	Figure	Item
NAS1149FN832P	12-2B	100
NAS1149FN832P	12-2B	320
NAS1149FN832P	3-24	145
NAS1149FN832P	3-7	260
NAS1149FN832P	3-7	290
NAS1149FN832P	6-1	–
NAS1149FN832P	6-11	70
NAS1149FN832P	6-13	–
NAS1149FN832P	6-7	120
NAS1149FN832P	6-7	200
NAS1149FN832P	11-7	660
NAS1149FN832P	11-11	190
NAS1351-3H10P	12-1A	150
NAS13523H8P	3-3	350
NAS1352-3H8P	3-3	210
NAS1523-4E	5-6	300
NAS1523-4E	5-7	70
NAS1611-010	3-26	80
NAS1611-025	4-4	110
NAS1611-025	4-4	40
NAS1611-029	4-2	140
NAS1611-137	4-4	150
NAS1611-326	4-4	90
NAS1611-333A	11-18	80
NAS1611-333A	12-2B	50
NAS1612-10	4-4	240
NAS1612-2	4-4	250
NAS428-3A10	3-28	220
NAS428K4-16	3-11	180
NAS428K4-16	3-11	20
NAS428K4A16	3-11	20
NAS43HT3-48	5-5	270
NAS43HT4-64	3-20	550
NAS43HT4-64	3-20A	550
NAS43HT4-64	3-20B	550
NAS43HT4-64	3-7	380
NAS509-8	4-4	190
NAS509-8	5-3	500
NAS559-3	4-4	180
NAS559-3	5-3	510
NAS561C8-10	5-5	60
NAS620-6L	6-11	–
NAS626-58	4-3	90
NAS636A08	6-8	–
NAS636A08	6-8	–
NAS6603-1	8-5	240
NAS6603-10	3-11	130
NAS6603-12	12-2B	280
NAS6603-14	11-8	290
NAS6603-14	11-7	610
NAS6603-16	3-26	200
NAS6603-18	8-5A	140
NAS66032	8-6	40
NAS6603-24	8-5	310
NAS6603-24	8-7	50
NAS6603D14	3-11	460
NAS6603D16	3-11	420
NAS6603D2	8-6A	130
NAS6603D30	3-11	380
NAS6603D4	12-2A	70
NAS6603D6	12-6A	190
NAS6603H1	12-1A	240
NAS6604-11	8-8	140
NAS6604-13	8-8	30
NAS6604-23	8-8	110
NAS6604-3	12-10	280
NAS6604-9	8-8	70
NAS6604D11	8-4	230
NAS6604D15	12-5	10
NAS6604D17	12-5	190
NAS6604D17	8-3	70
NAS6604D21	3-11	330
NAS6604D23	8-5	370
NAS6604D31	8-3A	310
NAS6604D56	3-11	270
NAS6604D7	12-1B	100

UNCONTROLLED COPY WHEN DOWNLOADED OR PRINTED

Visit www.enstromhelicopter.com for instructions to order an original manual and to register for email notification updates.

PART NUMBER INDEX
SECTIONS 3 THROUGH 6, 9, 10, AND 11
FIGURES 7-4C, 7-4D, 8-1 THROUGH 8-11, 12-1A THROUGH 12-2B,12-5, 12-6A, AND 12-10

Part Number	Figure	Item
NAS6604H1	12-10	270
NAS6605D11	8-4	200
NAS6605D11	8-5	520
NAS6605D11	8-6A	160
NAS6605D13	8-3	20
NAS6605D13	8-5	510
NAS6605D15	8-5A	90
NAS6605D21	8-4	140
NAS6605D9	8-5	430
NAS6606D25	8-5A	60
NAS6607-5	12-10	350
NAS686A08K	3-20	–
NAS686A08K	3-20	–
NAS686A08K	3-20A	–
NAS686A08K	3-20B	–
NAS686A3K	3-20	–
NAS686A3K	3-20A	–
NAS73-3E002	3-28	360
NK 500-8-5	8-9	380
NK 500-8-5	8-10	380
NK500-416-7	3-20	380
NK500-416-7	3-20A	380
NK500-416-7	3-20B	380
NK500-416-7	3-22	160
NK500-8-A/R	11-18	140
NK-500-8R6	4-1	150
NK500-8-X	12-2B	310
NK501-10-6	11-18	135
NK501-10-6	12-2B	260
NK-510-10R10	4-1	250
NK525-10R10	3-24	40
NK525-10R12	3-24	40
NO NUMBER	11-15	65
NO NUMBER	11-1	20
NO NUMBER	11-3	240
NP500-456-7	3-20	380
NP500-456-7	3-20A	380
NP500-456-7	3-20B	380
NP500-456-7	3-22	160
NP500-465-7	3-23	160
NP500-8R6	4-2	220
NP500-8R8	4-2	30
NP500-8-X	12-2B	310
NP501-10-6	12-2B	260
NP525-10R10	3-24	40
NP525-10R12	3-24	40
NPN	6-4	80
NS35649-262	6-11	–
NSN 5305-00-984-6208	3-1	60
PACMO-APZ2IN	11-8	480
PAI-700	11-5	260
PAI-700 28V	11-8	475
PGZF0A0180	4-4	90
PLT4S-CO	11-7	–
PS094032PG	3-26	150
PVC-13	11-8	500
PWMS-H25-C	6-14	60
QS100-M12S	3-3	130
QS100-M28	3-28	200
QS100-M28S	10-2	19
QS200-M10S	3-5	30
QS200-M24S	3-5.1	40
QS200-M24S	3-5.1	60
QS200-M28S	10-4	380
QS200-M40S	10-3	18
QS200-M40S	10-4	370
QS200-M40S	10-4	40
QS200-M40S	3-22	200
QS-200-M40S	10-2	24
QS200M44S	10-2	4
QS200-M44S	10-3	9
QS200-M44S	10-4	110
QS200-M44S	10-4	330
QS200-M44S	10-4	40
QS200-M44S	3-1	110
QS200-M44S	3-2	60

UNCONTROLLED COPY WHEN DOWNLOADED OR PRINTED

Visit www.enstromhelicopter.com for instructions to order an original manual and to register for email notification updates.

PART NUMBER INDEX
SECTIONS 3 THROUGH 6, 9, 10, AND 11
FIGURES 7-4C, 7-4D, 8-1 THROUGH 8-11, 12-1A THROUGH 12-2B,12-5, 12-6A, AND 12-10

Part Number	Figure	Item
R10-E6-X2-V700	6-11	270
R10-E6-Y2-V185	6-11	270
R1224S-28	6-2	10B
R35M	6-10	10
RA4400-6-C	5-5	290
RG24-11M	6-10	10
RG24-11M	6-13	80
RG-35	6-10	10
RHB32S	3-31	–
RJ-0370	3-8	150
RJ-1045-2	3-8	110
RJ9700	3-3	220
RST-200	4-2	120
S10P-175	3-24	60
S10P-175	3-24	60
S10P-320	3-24	60
S-12B	9-2	36
S4-200	3-2	113
S500-10	11-19	160
S500-12	11-19	195
S500-16	11-19	100
S500-3	11-19	210
S500-4	11-19	75
S500-6	11-19	200
S-50MP	5-6	50
S83BZ-2	12-1A	90
S8P-150	11-20	110
S8P270	9-3	310
S8P270	9-4	270
SAW4204-15-123	6-1	20
SAZ-4201E	6-2	30
SAZ-4401	6-2	30
SAZ-4401-1	6-13	170
SAZ-4401-1	6-2	30
SC616NJ	6-11	130
SC628ANPR	6-11	130
SCEET 7	3-5.1	50
SCEET 7	3-5.1	80
SJ-3501	11-20	130
SL61N-5F	12-10	170
SL61N-5P	12-10	170
SL61W-5P	12-10	180
SLN-3045	5-4	350
SLW-3045	5-4	–
SST1.5I-M	12-1B	140
SST1.5I-MP	11-7	850
SST1.5I-MP	11-8	390
SST1.5I-MP	11-9	300
SST1.5I-MP	11-17	200
SST1M-MP	6-12	100
SST1M-MP	11-17	190
SST25-MP	8-5	580
SST2S-MP	11-7	840
SST2S-MP	11-8	385
SST2S-MP	11-9	295
SST2S-MP	11-16	150
SST2S-MP	11-17	210
STD-1410	3-27	–
STD-1410	3-28	170
STD-2233	3-28	160
STD-2233	3-28	170
STD-35	3-27	–
STD-35	3-28	150
STD-475	3-27	–
STD-475	3-28	160
SY-0211	9-2	33
T14BH517BC	11-5	–
TIGK54-15-RD-A	11-6	510
TIGK54-15-WH-A	11-6	500
TIGK54-1S-RD-A	11-5	160A
TIGK54-1S-WH-A	11-5	160B
TIGM54-1C-RD-A	11-2	10
TIGM54-1C-RD-A	11-3	10
TIGM54-1C-WH-A	11-2	–20A
TIGM54-1C-WH-A	11-3	–20A
TILA64-1C-RD-A	11-2	–10A

UNCONTROLLED COPY WHEN DOWNLOADED OR PRINTED

Visit www.enstromhelicopter.com for instructions to order an original manual and to register for email notification updates.

PART NUMBER INDEX
SECTIONS 3 THROUGH 6, 9, 10, AND 11
FIGURES 7-4C, 7-4D, 8-1 THROUGH 8-11, 12-1A THROUGH 12-2B,12-5, 12-6A, AND 12-10

Part Number	Figure	Item
TILA64-1C-WH-A	11-2	20
TILA64-1C-WH-A	11-3	20
TS-023	12-6A	70
TS-023	12-6B	100
TS-023	12-6B	130
U16082-H61	11-4	40
UI-5934-1	11-5	60
UI5934-3	11-6	120
UI6082-H61	11-1	150
V3-1	8-9	50
V3-1	8-10	50
VC-3	5-2	–
VH-375	5-6	246
VH-75	4-2.1	170
VSF-7203	6-1	90
VSF-7403T	6-2	10
W-09	4-1	190
W-09	4-3	20
W-1284-G	6-6	120A
W-1284-R	6-6	120
W-1290-14	6-6	390
W-1290-28	6-6	390
W1819-020	12-6B	110
W33-7516-10ET-1	11-5	320
W97CSX-2	6-7	190
WC-22-6	4-3	100
WP-22-6	4-3	110
X-142	4-2	–
X1543HT	7-4C	-280
X-16799	6-1	140
X-16799	6-2	50
Y9485	11-8	180
Y9485	3-2	–
Y9485	11-7	60
Z99R6	8-9	280
Z99R6	8-10	280
Z9R4X3	8-9	170
Z9R4X3	8-10	170

UNCONTROLLED COPY WHEN DOWNLOADED OR PRINTED

Visit www.enstromhelicopter.com for instructions to order an original manual and to register for email notification updates.

ENSTROM F-28/280 SERIES ILLUSTRATED PARTS CATALOG

SECTION 1

INTRODUCTION

The detailed parts lists begin at Section 3 and contain all replacement parts starting with the helicopter major assemblies and proceeding through the various installations, subassemblies, and detail and component parts breakdowns.

UNCONTROLLED COPY WHEN DOWNLOADED OR PRINTED

Visit www.enstromhelicopter.com for instructions to order an original manual and to register for email notification updates.

NOTE

Please read the following introductory material carefully and completely. Understanding how information is presented will allow you to make optimum use of this catalog,

SCOPE

The Illustrated Parts Catalog (IPC) provides by means of text and companion illustrations, complete definition of all repair parts and spares items available to the customer. The IPC contains information on F-28/280 series helicopters manufactured by The Enstrom Helicopter Corporation, Menominee, Michigan. It is furnished for the purpose of parts procurement ONLY and shall not be used for any other purpose.

Orders for repair parts for engine or accessories (alternators, fuel controls, etc.) used in Enstrom helicopters should be placed with the engine or accessory manufacturer's authorized distributor or dealer and not through the Enstrom Helicopter Corporation.

INTRODUCTORY INFORMATION

The introductory portion of the IPC contains Record of Revisions, Change Methods, Title Page, Recommended Change Report, Table of Contents, Effective Page List and Part Number Index.

RECORD OF REVISIONS

A Record of Revisions page is placed in front of the manual to record the insertion of revisions as they are issued for the publication.

CHANGE METHODS

The IPC is periodically brought up-to-date by one of two methods.

Normal revisions are issued in the form of replacement pages and added pages to be inserted at designated locations. Revision instructions are included on the Revision Cover page, and once the revisions are inserted in the manual, the Record of Revisions page should be updated and the Revision Cover page be placed behind the Record of Revisions page.

Temporary revisions are issued in advance of the normal revision. In most cases, for example, the purpose of a temporary revision is to expedite the release of safety critical changes to the field. A temporary revision page is identified by a unique index number, i.e. Rev. 6, TRP-001 (Revision 6, Temporary Revision (Piston) 001). This unique index number is found in the revision level field of the page footer (left side). Temporary revision pages shall be printed on yellow stock. Instructions are contained on the temporary revision page, and once the temporary revision pages are inserted in the manual, the Record of Temporary Revisions page should be updated. Temporary revisions shall be maintained in the IPC until such time they are incorporated into the next normal revision issue.

UNCONTROLLED COPY WHEN DOWNLOADED OR PRINTED

Visit www.enstromhelicopter.com for instructions to order an original manual and to register for email notification updates.

TITLE PAGE

The Title Page lists the date of the currently effective edition or reissue. Information is given noting whether the contents are the initial issue of a publication or a reissue of the entire publication.

RECOMMENDED CHANGE REPORT

The Recommended Change Report is a form that can be used to notify Enstrom Helicopter Corporation of any errors or other changes requested by the user.

TABLE OF CONTENTS

The Table of Contents lists all material contained in the catalog by Section Number, Figure Number, Title and Page Number.

EFFECTIVE PAGE LIST

The Effective Pages List contains all of the pages that are currently effective for the publication, and their effective date.

PART NUMBER INDEX

The Part Number Index provides a listing of all of the part numbers in the catalog, with their corresponding Figure and Item numbers.

DETAILED PARTS LIST

The Detailed Parts Lists begin at Section 3 and contain all replacement parts starting with the helicopter major assemblies and proceeding through the various installations, subassemblies, detail and component parts breakdowns.

CHANGE BARS

Change bars are located throughout the IPC to identify information that has been changed. The Revision Number and Date of those changes is located at the bottom of each page.

ILLUSTRATIONS

Each major assembly or component is separately illustrated. Each part or assembly portrayed in the illustration is assigned an Item Number for cross reference to the parts list bearing the same figure number as the illustration.

ITEM NUMBER COLUMN

This column shows the Item Numbers assigned to each part in the list. This number links the part to the detail parts on the associated illustration.

- A dash (–) printed in this column indicates the part is not illustrated.
- Symbols printed in this column refer to footnotes at the end of the parts list.

UNCONTROLLED COPY WHEN DOWNLOADED OR PRINTED

Visit www.enstromhelicopter.com for instructions to order an original manual and to register for email notification updates.

PART NUMBER COLUMN

Part numbers in this column are used to identify parts for ordering. In most cases the number shown is the manufacturer's part number.

NPN printed in this column indicates there is no part number for the listing.

DESCRIPTION COLUMN

This column lists the nomenclature and description of parts, reference to next higher assemblies, and reference to other locations for breakdown of separately illustrated assemblies or components.

Indentation System

A period/dot system is used to show the relationship between major assemblies/components and the respective detailed parts. The nomenclature of major assemblies and/or components is preceded by a single period/dot. Parts preceded by two periods/dots are detailed parts of the preceding part with one period/dot. All parts preceded by three periods/dots are detailed parts of the preceding part with two periods/dots, and so on.

QTY PER ASSY COLUMN

This column lists the total number of units required at that location

- The abbreviation A/R may be located in this column indicating that the part is to be used as required during installation. Examples are shims, safety wire, and adhesives.
- The abbreviation REF may be located in this column indicating that the part listed is for reference only and is not shown in the illustration.

EFFECTIVITY COLUMN

This columns identifies if the parts are applicable to the F-28A, 280, F-28C, 280C, F-28F, 280F, and 280FX model helicopters. Notes located on the illustrations or after the detailed parts lists may also contain applicability information.

APPENDICES

The Appendices at the rear of the IPC contain additional information about equivalent parts and hardware substitutions.

UNCONTROLLED COPY WHEN DOWNLOADED OR PRINTED

Visit www.enstromhelicopter.com for instructions to order an original manual and to register for email notification updates.

SECTION 2

PARTS ORDERING INFORMATION

UNCONTROLLED COPY WHEN DOWNLOADED OR PRINTED

Visit www.enstromhelicopter.com for instructions to order an original manual and to register for email notification updates.

GENERAL

All owner parts orders should be placed through your nearest Enstrom Helicopter Dealer or Service Center. If you are unable to locate your Dealer or Service Center, contact the Enstrom Parts Coordinator for this information.

PARTS ORDERS

All parts orders should be addressed to:

Parts Coordinator
Enstrom Helicopter Corporation
2209 22nd Street
Menominee, MI 49858-3515

Telephone: (906) 863-1200
Fax: (906) 863-6821

Email: customerservice@enstromhelicopter.com

Please complete the parts order form located on the Enstrom.com website at: http://enstromhelicopter.com/wp-content/uploads/2012/03/PARTS-ORDER-FORM-V4.pdf
If you do not have access to the form, please include the information outlined in the following paragraphs.

To ensure shipment of the proper parts, be sure to include the model number and the serial number of each aircraft on the parts order. This information can be found in the Aircraft Log Book and on the data plate attached to the right rear side of the tailcone for the “C” and “F” models or to the left rear side of the tailcone for the “A” models.

Order by part number and description as shown in the IPC list. Be sure to list the quantity required. Incorrect numbers will be returned for clarification and delay shipment of your order.

The purchase order must indicate the name and address of the ordering organization, and the name and address of the organization to whom the parts are to be shipped. It must be signed by an authorized representative of the dealer or service center.

If parts are ordered by telephone, the purchase order must have the words "confirming order" and the confirming date on the purchase order to avoid duplication of shipments.

All returned orders will be assessed a 20% restocking charge.

NOTE

The Enstrom Helicopter Corporation reserves the right, without prior notice, to supply substitute interchangeable parts for the ordered part when design changes, revised specifications, stock supply, or product improvements make such a substitution necessary.

UNCONTROLLED COPY WHEN DOWNLOADED OR PRINTED

Visit www.enstromhelicopter.com for instructions to order an original manual and to register for email notification updates.

SHIPMENT

All purchase orders must specify the desired method of shipment. If this information is not stated, the shipment will be made via surface transportation. The specific carrier will be determined at the time of shipment based on weight, dimensions, and destination. Shipment by other than surface transportation must be indicated at the time the order is placed and must be shown on the purchase order.

All truck and air freight charges are on a collect on delivery (C.O.D) basis.

EMERGENCY REQUIREMENTS

Telephone orders for emergency (**AOG**) situations receive priority processing, and should be kept to a minimum; since they delay shipment of normal orders.

CREDIT TERMS

Enstrom does not automatically establish credit terms. All orders for domestic shipment are sent C.O.D. unless prior arrangements have been made. Payment arrangements for export order shipments may be accomplished by establishment of an irrevocable letter of credit for major shipments. All other shipments will be by sight draft.

Requests for an open account or other credit terms should include a copy of the latest financial report; three (3) credit references; one (1) banking reference; and the desired amount of credit. This information should be addressed to:

Controller
Enstrom Helicopter Corporation
2209 22nd Street
Menominee, MI 49858-3515

By closely following the above instructions, you will help the Enstrom Helicopter Corporation provide faster delivery and better service.

UNCONTROLLED COPY WHEN DOWNLOADED OR PRINTED

Visit www.enstromhelicopter.com for instructions to order an original manual and to register for email notification updates.

INTENTIONALLY LEFT BLANK

UNCONTROLLED COPY WHEN DOWNLOADED OR PRINTED

Visit www.enstromhelicopter.com for instructions to order an original manual and to register for email notification updates.

SECTION 3

POWER PLANT

TABLE OF CONTENTS

	Cover Page	3-1
	Table of Contents	3-1
3-1	Air Induction System (F-28A)	3-2
3-2	Air Induction System	3-4
3-3	Turbocharger Induction System	3-8
3-4	Fuel Nozzle Air Vent System	3-13
3-5	Engine Vent Installation	3-16
3-5.1	Magneto Cooling Installation	3-18
3-6	Oil Cooler Installation (“A” Models)	3-21
3-7	Oil Cooler Installation (C, F Models)	3-24
3-8	Turbocharger Oil Lines	3-28
3-9	Oil Fill Tube Installation	3-31
3-10	Throttle and Mixture Control Installation (A, C Models)	3-34
3-11	Throttle Correlator Assembly (F Models)	3-40
3-12	Throttle Correlator Installation (F Models)	3-44
3-13	Dual Throttle Control Installation (F Models)	3-46
3-14	Throttle Cable Installation (F Models)	3-48
3-15	Mixture Cable Installation (F Models)	3-50
3-16	Fire Curtain Assembly (All Models)	3-53
3-17	Fire Curtain Installation (All Models)	3-55
3-18	Engine Fan Shroud Assembly (A Models)	3-59
3-19	Engine Fan Shroud Assembly (C Models)	3-63
3-20/A/B	Engine Fan Shroud Assembly (C, F Models)	3-66
3-21	Cooling Fan and Alternator Installation	3-96
3-22	Engine Fuel System (A Models)	3-98
3-23	Engine Fuel System (C, F Models)	3-103
3-24	Main Fuel System	3-108
3-25	Fuel Level Sending Unit	3-115
3-26	Fuel Shutoff Valve Assembly	3-117
3-27	Exhaust System Installation (A Models)	3-120
3-28	Exhaust System Installation (C, F Models)	3-122
3-29	Turbocharger Mount Installation	3-127
3-30	Engine Mount Assembly	3-130
3-31	Engine Components	3-132

UNCONTROLLED COPY WHEN DOWNLOADED OR PRINTED

Visit www.enstromhelicopter.com for instructions to order an original manual and to register for email notification updates.

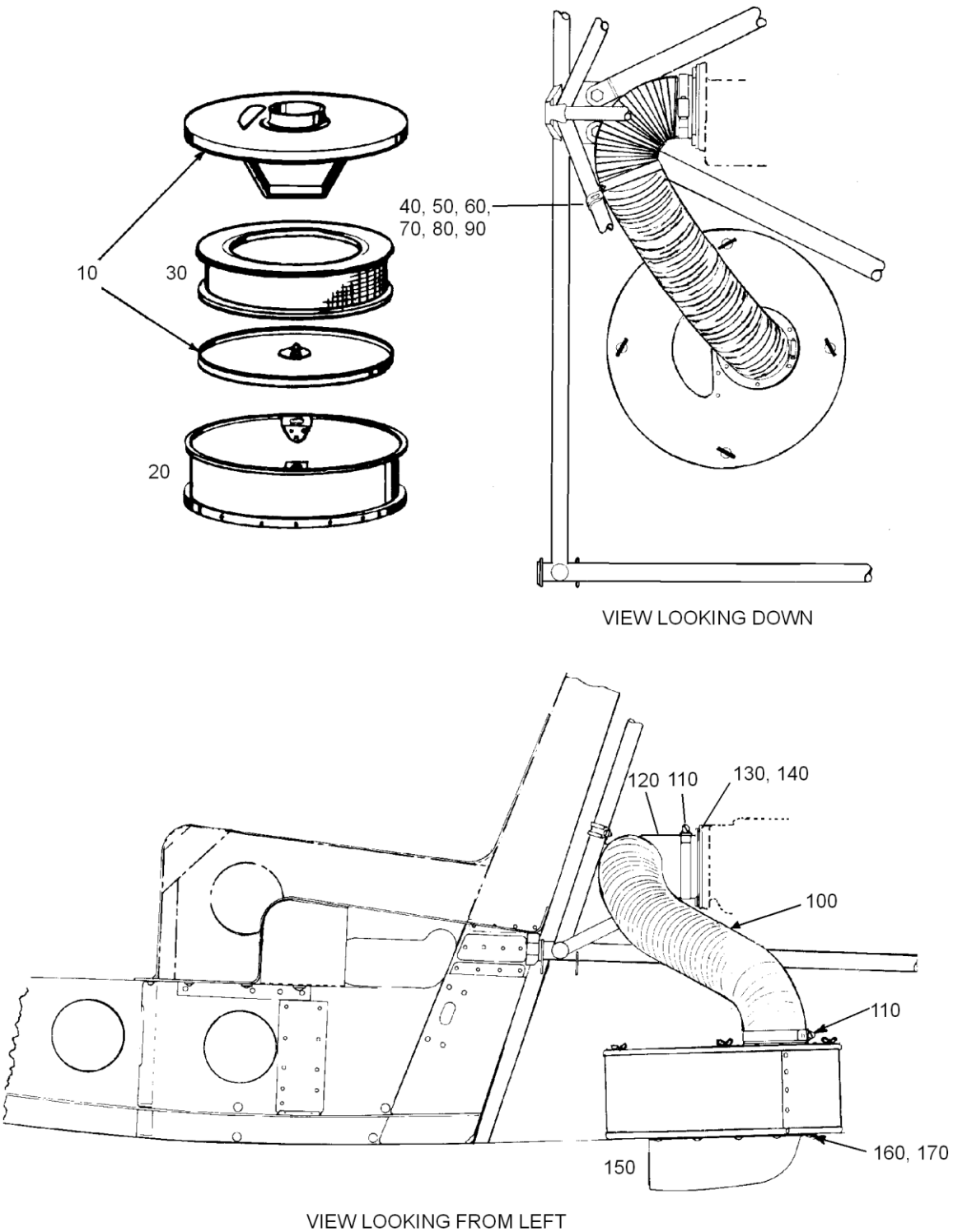

FIGURE 3-1. AIR INDUCTION SYSTEM (F-28A)

UNCONTROLLED COPY WHEN DOWNLOADED OR PRINTED
Visit www.enstromhelicopter.com for instructions to order an original manual and to register for email notification updates.

FIGURE 3-1. AIR INDUCTION SYSTEM (F-28A)

ITEM NUMBER	PART NUMBER	DESCRIPTION	QTY PER ASSY	MODELS AFFECTED						
				F-28A	280	F-28C	280C	F-28F	280F	280FX
10	28-12302-1	. Cover Assembly (Obsolete)	1	X						
20	28-12301-1	. Container Assembly (Obsolete)	1	X						
30	6487923	. Air Filter (BA-115 - includes screen and foam)	1	X						
–	BA-15	. . Foam Filter (Insert only)	1	X						
30	CA151PL	. Air Filter, Fram (Obsolete)	1	X						
30	A53C	. Air Filter, AC (Obsolete)	1	X						
30	AFP5	. Air Filter, Purolator (Obsolete)	1	X						
40	AN742D48	. Clamp	1	X						
50	MS21919-DF12	. Clamp	1	X						
60	NSN 5305-00-984-6208	. Screw	1	X						
60	AN515-10-6	. Screw (Superseded by NSN 5305-00-984-6208)	1	X						
60	NAS1149F0332P	. Washer	1	X						
70	AN960-10L	. Washer (Superseded by NAS1149F0332P)	1	X						
80	MS35338-43	. Lock Washer	1	X						
80	AN935-10	. Lock Washer (Superseded by MS35338-43)	1	X						
90	AN345-10	. Nut	1	X						
100	28-12357-1	. Hose	1	X						
110	QS200-M44S	. Clamp	2	X						
120	28-12329-1	. Elbow Adapter Flange (Obsolete)	1	X						
130	AN74A4	. Bolt	4	X						
140	AN960-416L	. Washer	4	X						
150	28-12313-1	. Air Scoop	1	X						
160	AN525-832R6	. Screw	9	X						
170	AN960-8	. Washer	9	X						

UNCONTROLLED COPY WHEN DOWNLOADED OR PRINTED

Visit www.enstromhelicopter.com for instructions to order an original manual and to register for email notification updates.

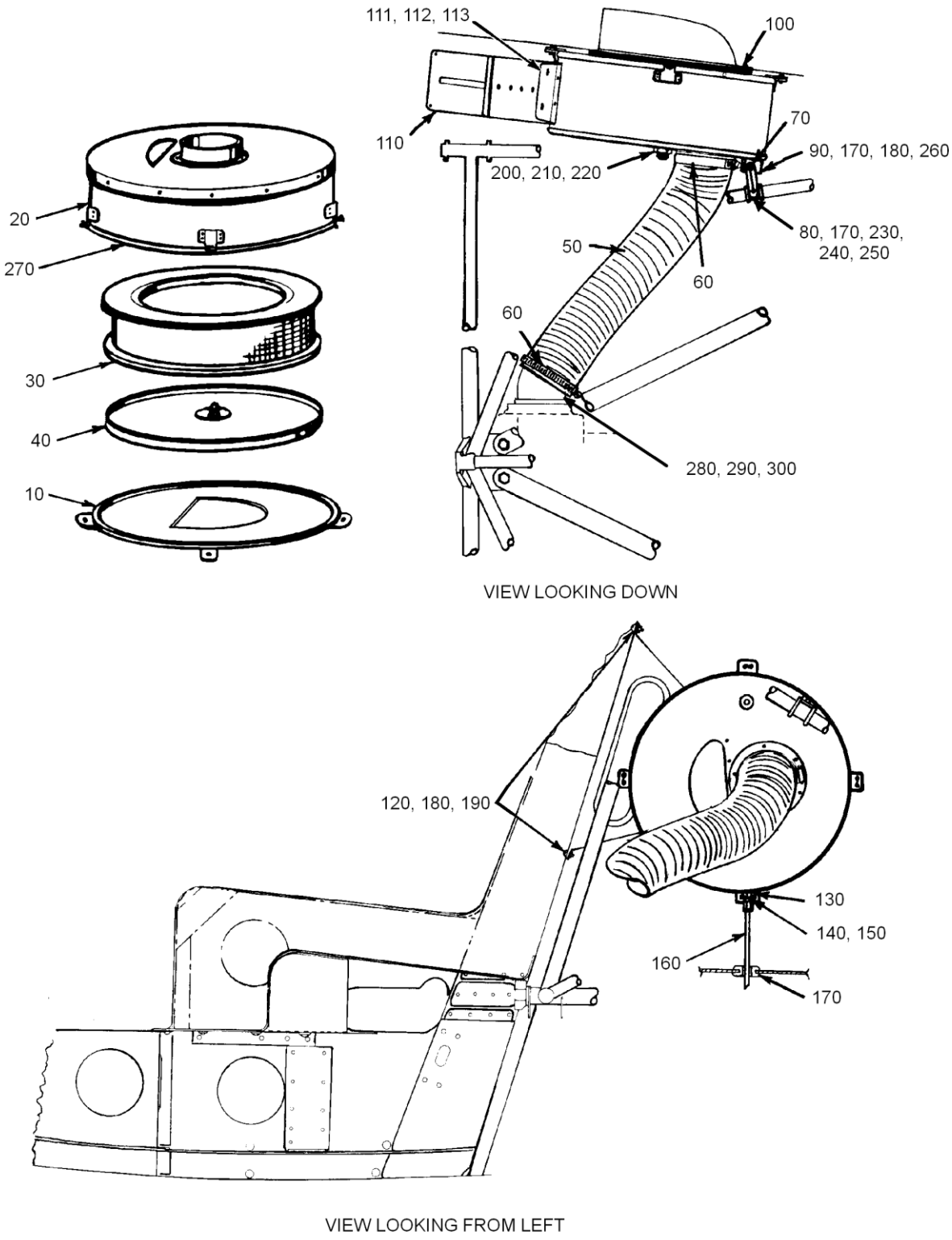

See Figure 3-5.1 for the Magneto Cooling Installation.

FIGURE 3-2. AIR INDUCTION SYSTEM

UNCONTROLLED COPY WHEN DOWNLOADED OR PRINTED
Visit www.enstromhelicopter.com for instructions to order an original manual and to register for email notification updates.

FIGURE 3-2. AIR INDUCTION SYSTEM

ITEM NUMBER	PART NUMBER	DESCRIPTION	QTY PER ASSY	MODELS AFFECTED						
				F-28A	280	F-28C	280C	F-28F	280F	280FX
10	28-12361-1	. Cover Assembly	1	X	X	X	X	X	X	X
–	Y9485	. . Tape: Transfer, 0.75" Adhesive	36 ‘’	X	X	X	X	X	X	X
–	28-12344-11	. . Cover	1	X	X	X	X	X	X	X
–	28-12345-1	. . Bracket Cover Assembly	4	X	X	X	X	X	X	X
–	28-12362-1	. . Seal: Cover, Air Box	1	X	X	X	X	X	X	X
20	28-12354-2	. Container Assembly	1	X	X	X	X	X	X	X
20†	28-12354-1	. Container Assembly	1	X	X					
30	6487923	. Air Filter (BA-115 - includes screen and foam)	1	X	X	X	X	X	X	X
–	BA-15	. . Foam Filter (Insert only)	1	X	X	X	X	X	X	X
30	A53C	. Air Filter, AC (Obsolete)	1	X	X	X	X	X	X	X
30	AFP5	. Air Filter, Purolator (Obsolete)	1	X	X	X	X	X	X	X
40	28-12335-1	. Cover, Inside	1	X	X	X	X	X	X	X
50	28-12357-1	. Hose	1	X	X	X	X	X	X	X
60	QS200-M44S	. Clamp	2	X	X	X	X	X	X	X
70	28-12353-1	. Strap Assembly	1	X	X	X	X	X	X	X
80	MS21919-DF12	. Clamp	1	X	X	X	X	X	X	X
90	28-12341-1	. Bracket Assembly	1	X	X	X	X	X	X	X
100	28-12362-1	. Seal	1	X	X	X	X	X	X	X
110**	28-12350-5	. Bracket	1					X		X
110*	28-12350-3	. Bracket ((Superseded by 28-12350-5)	1					X		X
110	28-12350-2	. Bracket (Superseded by 28-12350-3)	1	X	X	X	X	X	X	X
110†	28-12350-1	. Bracket (Superseded by 28-12350-3)	1	X	X	X	X	X	X	X
111	AJW4-30	. . Stud	1	X	X	X	X	X	X	X
112	GA4-250	. . Retainer	1	X	X	X	X	X	X	X
113	1219-4200-Z3Y	. . Spring	1	X	X	X	X	X	X	X

UNCONTROLLED COPY WHEN DOWNLOADED OR PRINTED

Visit www.enstromhelicopter.com for instructions to order an original manual and to register for email notification updates.

FIGURE 3-2. AIR INDUCTION SYSTEM

ITEM NUMBER	PART NUMBER	DESCRIPTION	QTY PER ASSY	MODELS AFFECTED						
				F-28A	280	F-28C	280C	F-28F	280F	280FX
113	S4-200	. . Spring (Superseded by 1219-4200-Z3Y)	1	X	X	X	X	X	X	X
120	AN526-832R8	. Screw	4	X	X	X	X	X	X	X
130	28-12415-9	. Fitting, Drain Outlet	1	X	X	X	X	X	X	X
140	AN924-4D	. Nut	1	X	X	X	X	X	X	X
150	AN960-716	. Washer	1	X	X	X	X	X	X	X
160	28-17302-3	. Tube	1	X	X	X	X	X	X	X
170	AN931-5-12	. Grommet	1	X	X	X	X	X	X	X
170	AN931-5-9	. Grommet (Superseded by AN931-5-12)	1	X	X	X	X	X	X	X
180	NAS1149FN816P	. Washer	14	X	X	X	X	X	X	X
180	AN960-8L	. Washer (Superseded by NAS1149FN816P)	14	X	X	X	X	X	X	X
190	AN365-832A	. Nut	6	X	X	X	X	X	X	X
190	AN364-832A	. Nut (Superseded by AN365-832A)	6	X	X	X	X	X	X	X
200	28-12358-1	. Fitting	1			X	X	X	X	X
210	AN924-6D	. Nut	1			X	X	X	X	X
220	NAS1149F0963P	. Washer	1			X	X	X	X	X
220	AN960-916	. Washer (Superseded by NAS1149F0963P)	1			X	X	X	X	X
230	AN515-8R8-832	. Screw	1	X	X	X	X	X	X	X
230	AN515-8-8	. Screw (Superseded by AN515-8R8-832)	1	X	X	X	X	X	X	X
240	AN935-8	. Lock Washer	1	X	X	X	X	X	X	X
250	AN340-832	. Nut	1	X	X	X	X	X	X	X
250	AN340-8	. Nut (Superseded by AN340-832)	1	X	X	X	X	X	X	X
260	AN515-8R8	. Screw	2	X	X	X	X	X	X	X
260	AN526-832-5	. Screw (Superseded by AN515-8R8)	2	X	X	X	X	X	X	X
270	980-001	. Channel	A/R	X	X	X	X	X	X	X

UNCONTROLLED COPY WHEN DOWNLOADED OR PRINTED

Visit www.enstromhelicopter.com for instructions to order an original manual and to register for email notification updates.

FIGURE 3-2. AIR INDUCTION SYSTEM

ITEM NUMBER	PART NUMBER	DESCRIPTION	QTY PER ASSY	MODELS AFFECTED						
				F-28A	280	F-28C	280C	F-28F	280F	280FX
280	28-123019-1	. Elbow Adapter Assembly	1			X	X	X	X	X
280†	28-12329-1	. Elbow Adapter Assembly (Obsolete)	1	X	X					
290†	AN74A4	. Bolt	4	X	X	X	X	X	X	X
300†	AN960-416L	. Washer	4	X	X	X	X	X	X	X

† Left side air filter installation.

* Effectivity F-28F S/N 817 – subsequent and 280FX S/N 2110 – subsequent. Retrofittable to F-28F S/N 505 – subsequent and 280FX S/N 2001 – subsequent.

** Effectivity F-28F S/N 831 – subsequent and 280FX S/N 2141 – subsequent. Retrofittable to F-28F S/N 509 – subsequent and 280FX S/N 2001 – subsequent.

UNCONTROLLED COPY WHEN DOWNLOADED OR PRINTED

Visit www.enstromhelicopter.com for instructions to order an original manual and to register for email notification updates.

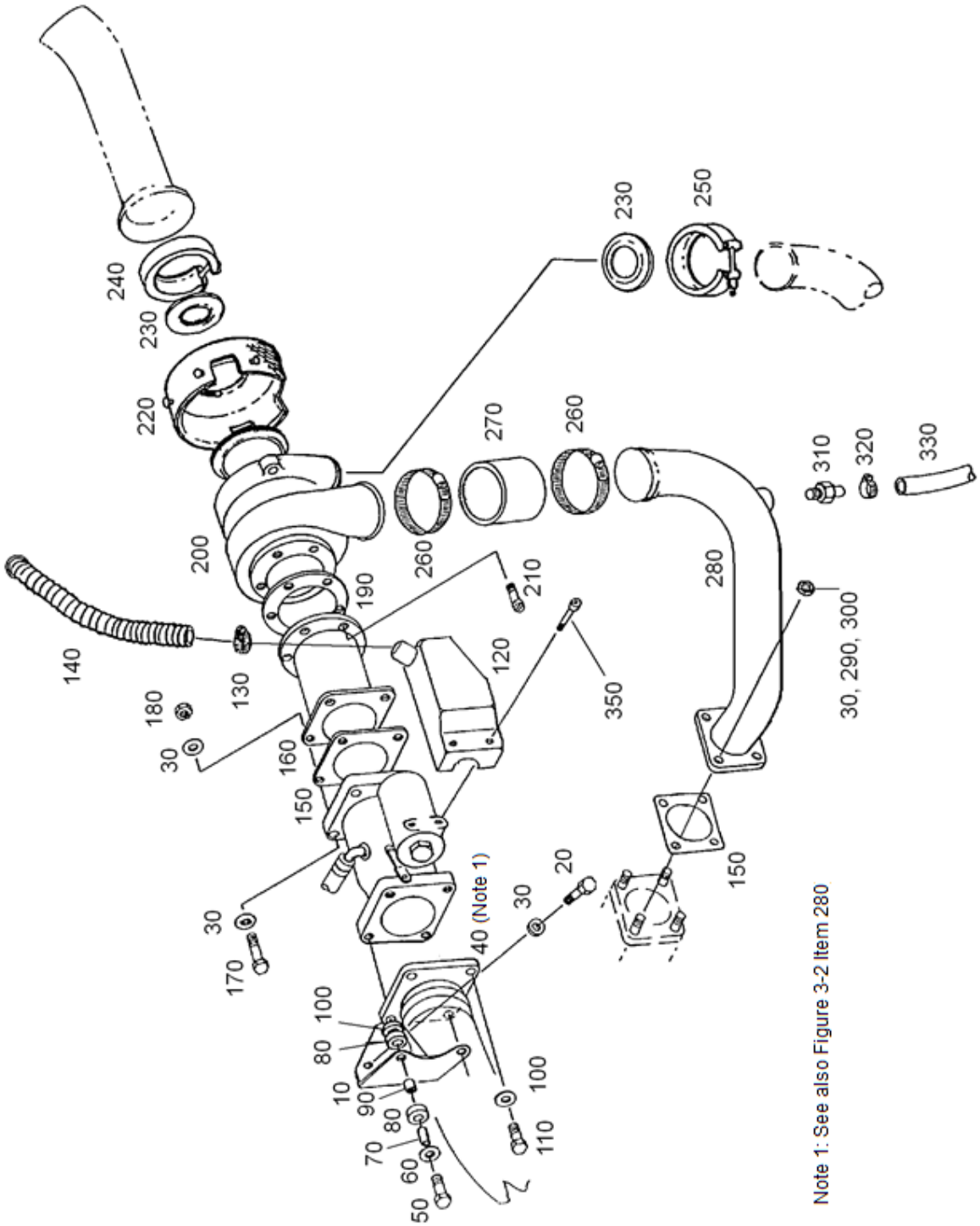

FIGURE 3-3. TURBOCHARGER INDUCTION SYSTEM

UNCONTROLLED COPY WHEN DOWNLOADED OR PRINTED

Visit www.enstromhelicopter.com for instructions to order an original manual and to register for email notification updates.

FIGURE 3-3. TURBOCHARGER INDUCTION SYSTEM

ITEM NUMBER	PART NUMBER	DESCRIPTION	QTY PER ASSY	MODELS AFFECTED						
				F-28A	280	F-28C	280C	F-28F	280F	280FX
10	28-123022-11	. Mount Bracket	1			X	X	X	X	X
20	AN75A5	. Bolt	2			X	X	X	X	X
30	AN960-516	. Washer	14			X	X	X	X	X
40	28-123019-1	. Elbow Adapter Assembly	1			X	X	X	X	X
50	AN74A11	. Bolt	2			X	X	X	X	X
60	ECD050-11	. Washer	2			X	X	X	X	X
60	1/4 Harper	. Washer (Superseded by ECD050-11)	2			X	X	X	X	X
70●	28-123007-11	. Spacer	2			X	X	X	X	X
70	28-123007-1	. Spacer (Superseded by 28-123007-11)	2			X	X	X	X	X
80●	28-123009-17	. Washer	4			X	X	X	X	X
80	28-123009-11	. Washer (Superseded by 28-123009-17)	4			X	X	X	X	X
90●	28-123009-15	. Shock Mount Tube	2			X	X	X	X	X
90	28-123009-13	. Shock Mount Tube (Superseded by 28-123009-15)	2			X	X	X	X	X
100	AN960-416L	. Washer	4			X	X	X	X	X
110	AN74A5	. Bolt	2			X	X	X	X	X
120‡‡	28-181007-5	. Blast Tube Assembly	1			X	X	X	X	X
120	28-181007-3	. Blast Tube Assembly (Superseded by 28-181007-5)	1			X	X	X	X	X
120	28-181007-1	. Blast Tube Assembly (Superseded by 28-181007-3)	1			X	X	X	X	X
130	QS100-M12S	. Clamp	2			X	X	X	X	X
130	AN737TW34-38	. Clamp (Obsolete)	2			X	X	X	X	X
140	28-181006-11	. Hose	1			X	X	X	X	X
150**	66224	. Gasket	2			X	X	X	X	X
160†	28-12575-1	. Adapter Assembly	1			X	X	X	X	X
160*	037360-161	. Adapter Assembly (Superseded by 28-12575-1)	1			X	X	X	X	X

UNCONTROLLED COPY WHEN DOWNLOADED OR PRINTED

Visit www.enstromhelicopter.com for instructions to order an original manual and to register for email notification updates.

FIGURE 3-3. TURBOCHARGER INDUCTION SYSTEM

ITEM NUMBER	PART NUMBER	DESCRIPTION	QTY PER ASSY	MODELS AFFECTED						
				F-28A	280	F-28C	280C	F-28F	280F	280FX
160	037360-115	. Adapter Assembly (Superseded by 037360-161)	1			X	X	X	X	X
170	AN5-11A	. Bolt	4			X	X	X	X	X
180	MS20500-524	. Nut	4			X	X	X	X	X
180	AN363-524	. Nut (Superseded by MS20500-524)	4			X	X	X	X	X
180	MS21045L5	. Nut (Superseded by AN363-524)	4			X	X	X	X	X
190**	LW-13476	. Gasket	1			X	X	X	X	X
190	28-12360-1	. Gasket (Alternate)	1			X	X	X	X	X
200	600700-0000	. Turbocharger	1			X	X	X	X	X
200●	3BT5EE10J2	. Turbocharger (Superseded by 600700-0000)	1			X	X	X	X	X
200	103574-00	. Turbocharger (Superseded by 3BT5EE10J2)	1			X	X	X	X	X
–	CF600391-00	. . Clamp (supplied with turbocharger)	1			X	X	X	X	X
–	MS20995C32	. . Safety Wire (doubled)	A/R			X	X	X	X	X
210	NAS1352-3H8P	. Cap Screw	6			X	X	X	X	X
210	AN503-10-8	. Screw (Superseded by NAS1352-3H8P)	6			X	X	X	X	X
220	RJ9700	. Turbo Blanket	1			X	X	X	X	X
230**	LW-14485	. Gasket	2			X	X	X	X	X
240**	LW-13464	. Clamp	1			X	X	X	X	X
–	MS20995C32	. . Safety Wire (doubled)	A/R			X	X	X	X	X
250	28-12162-1	. Clamp Assembly	1			X	X	X	X	X
–	MS20995C32	. . Safety Wire (doubled)	A/R			X	X	X	X	X
260	ECD111-11	. Clamp	2			X	X	X	X	X
260	MS35842-13	. Clamp (Alternate)	2			X	X	X	X	X
260	20040S	. Clamp (Alternate)	2			X	X	X	X	X
270	ENS1001	. Sleeve	1			X	X	X	X	X
280††	037360-161	. Induction Tube Assembly	1			X	X	X	X	X

UNCONTROLLED COPY WHEN DOWNLOADED OR PRINTED
Visit www.enstromhelicopter.com for instructions to order an original manual and to register for email notification updates.

FIGURE 3-3. TURBOCHARGER INDUCTION SYSTEM

ITEM NUMBER	PART NUMBER	DESCRIPTION	QTY PER ASSY	MODELS AFFECTED						
				F-28A	280	F-28C	280C	F-28F	280F	280FX
280●	037360-160	. Induction Tube Assembly	1			X	X	X	X	X
280±	037360-104	. Induction Tube Assembly	1			X	X	X	X	X
280●●	28-12576-1	. Induction Tube Assembly	1			X	X	X	X	X
–	28-12359-11	. . Plate (Use with 037360-104)	1			X	X	X	X	X
–	28-12359-13	. . Gasket (Use with 037360-104)	1			X	X	X	X	X
–	AN3-6A	. . Bolt (Use with 037360-104)	4			X	X	X	X	X
–	MS21045L3	. . Nut (Use with 037360-104)	4			X	X	X	X	X
–	AN960-10L	. . Washer (Use with 037360-104)	8			X	X	X	X	X
290	MS35649-2312	. Nut	4			X	X	X	X	X
300	AN936A516	. Lock Washer	4			X	X	X	X	X
310**	LW-13807	. Valve Assembly	1			X	X	X	X	X
320	1	. Clamp	1			X	X	X	X	X
320	AN737TW22	. Clamp (Alternate)	1			X	X	X	X	X
330	28-121000-19	. Drain Tube	1			X	X	X	X	X
–‡	28-12577-1	. Muffler: Exhaust	1					X		X
–	28-01039-1	. Muffler Assembly (Optional)	1					X	X	X
–**	LW-13646	. . Clamp	1					X	X	X
–	ENX-0001	. . Muffler Assembly	1					X	X	X
–	MS20995C41	. . Safety Wire	A/R					X	X	X
350	NAS13523H8P	. Existing Hardware	1			X	X	X	X	X
–	AE80664H	. Valve, Sump, 1/2” Engine	1			X	X	X	X	X

** Obtain from Lycoming Distributor.

* Effectivity F-28F S/N 788 and subsequent. Model 280FX S/N 2073 and subsequent.

†† Effectivity F-28F S/N 788 – 817. Model 280FX S/N 2073 – 2109.

† Effectivity F-28F S/N 816 and subsequent. Model 280FX S/N 2104 and subsequent.

●● Effectivity F-28F S/N 818 and subsequent. Model 280FX S/N 2110 and subsequent.

UNCONTROLLED COPY WHEN DOWNLOADED OR PRINTED

Visit www.enstromhelicopter.com for instructions to order an original manual and to register for email notification updates.

▌	‡	Effectivity F-28F S/N 818 and subsequent. Effectivity 280FX S/N 2111 and subsequent. Retrofittable to F-28F S/N 509 and 280FX S/N 2001.
	±	Used on helicopters built in 1982.
	•	Change effective on helicopters built 2-9-87 and later.
	‡‡	Effectivity F-28F S/N 830 and subsequent. Effectivity 280FX S/N 2135 and subsequent. Retrofittable to F-28F S/N 509 and 280FX S/N 2001.

UNCONTROLLED COPY WHEN DOWNLOADED OR PRINTED

Visit www.enstromhelicopter.com for instructions to order an original manual and to register for email notification updates.

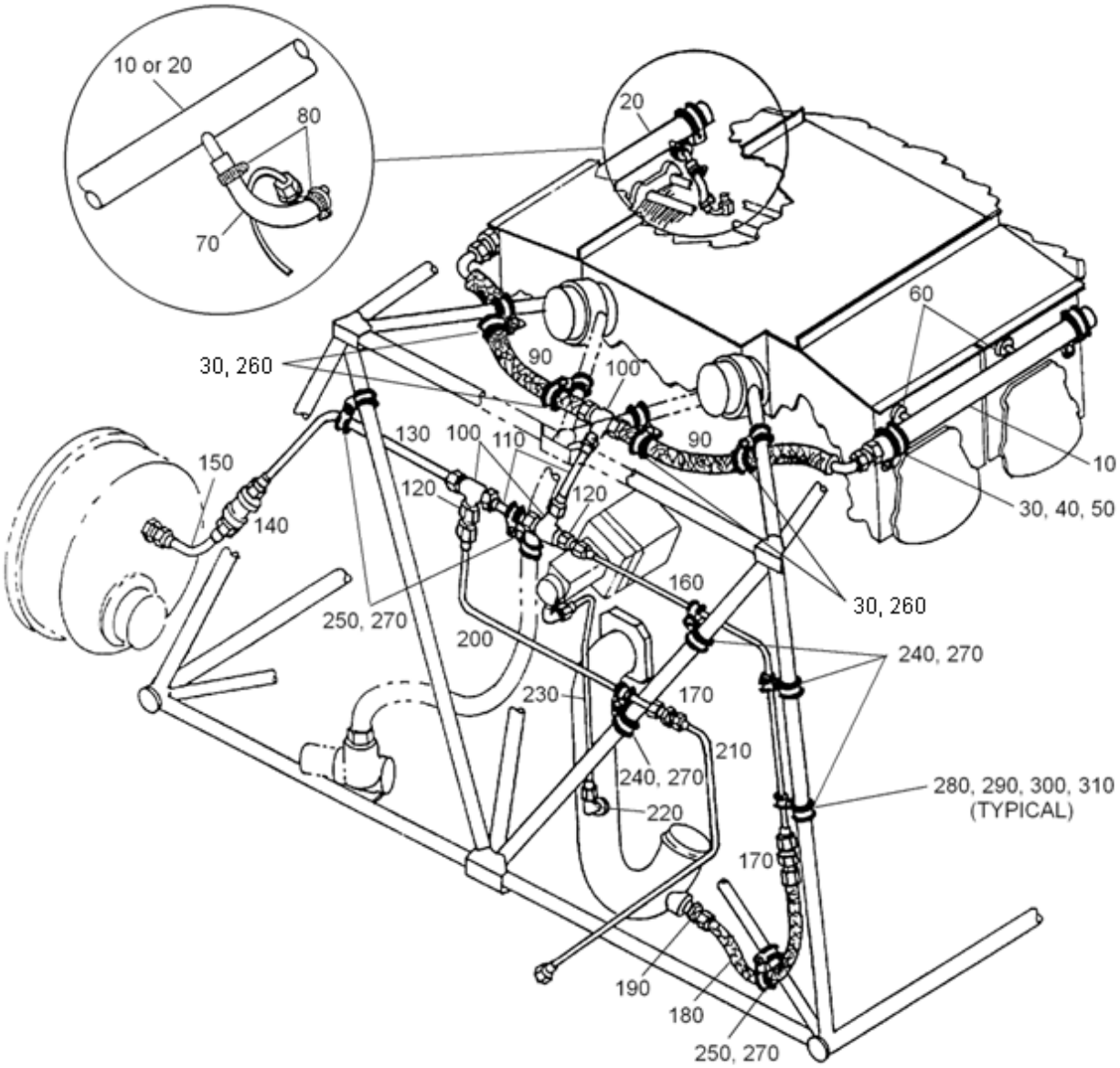

FIGURE 3-4. FUEL NOZZLE AIR VENT SYSTEM

UNCONTROLLED COPY WHEN DOWNLOADED OR PRINTED

Visit www.enstromhelicopter.com for instructions to order an original manual and to register for email notification updates.

FIGURE 3-4. FUEL NOZZLE AIR VENT SYSTEM

ITEM NUMBER	PART NUMBER	DESCRIPTION	QTY PER ASSY	MODELS AFFECTED						
				F-28A	280	F-28C	280C	F-28F	280F	280FX
10	28-123015-1	. Manifold Assembly, L/H	1			X	X	X	X	X
20	28-123014-1	. Manifold Assembly, R/H	1			X	X	X	X	X
30	MS21919WCJ10	. Clamp	8			X	X	X	X	X
40	AN503-416-10	. Screw	4			X	X	X	X	X
50	AN960-416L	. Washer	4			X	X	X	X	X
60	AN931-3-9	. Grommet	4			X	X	X	X	X
70	28-123005-5	. Hose	4			X	X	X	X	X
80	1	. Clamp	8			X	X	X	X	X
80	AN737TW22	. Clamp (Obsolete)	8			X	X	X	X	X
90	601002-6-0180	. Hose Assembly	2			X	X	X	X	X
90	62447-6-180	. Hose Assembly (Obsolete)	2			X	X	X	X	X
100	AN824-6D	. Tee	3			X	X	X	X	X
110	28-123013-1	. Vent Nozzle Fuel Assembly	2			X	X	X	X	X
120	2406-06-04	. Reducer	2			X	X	X	X	X
120	883-FS-06X04	. Reducer (Superseded by 2406-06-04)	2			X	X	X	X	X
130	28-123012-1	. Vent Nozzle Fuel Assembly	1			X	X	X	X	X
140	MS28884A-6	. Check Valve	1			X	X	X	X	X
150	28-123024-1	. Tube Assembly	1			X	X	X	X	X
160	28-123011-1	. Vent Nozzle Fuel Assembly	1			X	X	X	X	X
170	AN815-4D	. Union	2			X	X	X	X	X
180	28-124003-1	. Hose Assembly	1			X	X	X	X	X
190	MS20823-4	. Elbow	1			X	X	X	X	X
190	AN816-4	. Union (Superseded by MS20823-4)	1			X	X	X	X	X
200*	28-123016-1	. Vent Nozzle Fuel Assembly	1			X	X	X	X	X
210*	28-121007-1	. Static Fuel Pressure Line	1			X	X	X	X	X
220	MS20822-4D	. Elbow	1			X	X	X	X	X
230**	28-121008-1	. Line Vent Static Assembly	1			X	X	X	X	X

UNCONTROLLED COPY WHEN DOWNLOADED OR PRINTED
Visit www.enstromhelicopter.com for instructions to order an original manual and to register for email notification updates.

FIGURE 3-4. FUEL NOZZLE AIR VENT SYSTEM

ITEM NUMBER	PART NUMBER	DESCRIPTION	QTY PER ASSY	MODELS AFFECTED						
				F-28A	280	F-28C	280C	F-28F	280F	280FX
230†	28-121008-3	. Static Fuel Pressure Line	1			X	X	X	X	X
240	MS21919WCJ4	. Clamp	4			X	X	X	X	X
250	MS21919WCJ6	. Clamp	3			X	X	X	X	X
260	MS21919WCJ8	. Clamp	4			X	X	X	X	X
270	MS21919WCJ12	. Clamp	7			X	X	X	X	X
280	MS35338-42	. Screw	11			X	X	X	X	X
280	AN515-8R12	. Screw (Superseded by MS35338-42)	11			X	X	X	X	X
290	NAS1149FN816P	. Washer	22			X	X	X	X	X
290	AN960-8L	. Washer (Superseded by NAS1149FN816P)	22			X	X	X	X	X
300	MS35338-42	. Lock Washer	11			X	X	X	X	X
300	AN935-8	. Lock Washer (Superseded by MS35338-42)	11			X	X	X	X	X
310	MS35649-282	. Nut	11			X	X	X	X	X
310	AN340-832	. Nut (Superseded by MS35649-282)	11			X	X	X	X	X

* Replaces one piece line assembly, P/N 28-121007-2, used in earlier production aircraft.

** Used with induction tube assemblies, P/N 037360-104 and 037360-160. Reference Figure 3-3.

† Used with induction tube assembly, P/N 037360-161. Reference Figure 3-3.

UNCONTROLLED COPY WHEN DOWNLOADED OR PRINTED

Visit www.enstromhelicopter.com for instructions to order an original manual and to register for email notification updates.

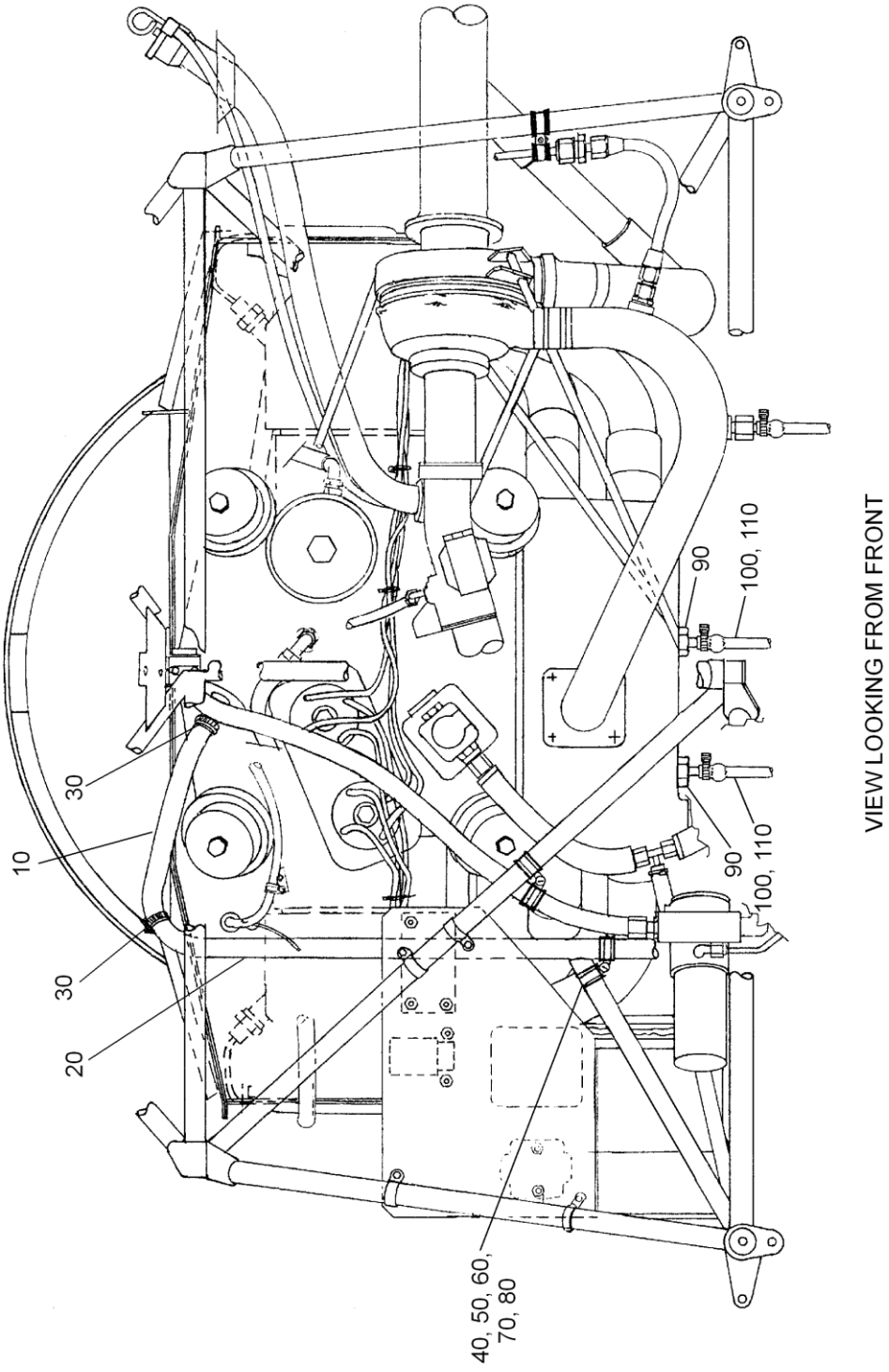

See Figure 3-5.1 for the Magneto Cooling Installation.

FIGURE 3-5. ENGINE VENT INSTALLATION

UNCONTROLLED COPY WHEN DOWNLOADED OR PRINTED

Visit www.enstromhelicopter.com for instructions to order an original manual and to register for email notification updates.

FIGURE 3-5. ENGINE VENT INSTALLATION

ITEM NUMBER	PART NUMBER	DESCRIPTION	QTY PER ASSY	MODELS AFFECTED						
				F-28A	280	F-28C	280C	F-28F	280F	280FX
10	28-12145-1	. Breather Vent Hose	1	X	X	X	X	X	X	X
20	28-12140-1	. Breather Vent Tube	1	X	X	X	X	X	X	X
30	QS200-M10S	. Clamp	2	X	X	X	X	X	X	X
40	MS21919WDF12	. Clamp	2	X	X	X	X	X	X	X
50	MS35206-246	. Screw	1	X	X	X	X	X	X	X
50	AN515-8R10	. Screw (Superseded by MS35206-246)	1	X	X	X	X	X	X	X
60	NAS1149FN816P	. Washer	2	X	X	X	X	X	X	X
60	AN960-8L	. Washer (Superseded by NAS1149FN816P)	2	X	X	X	X	X	X	X
70	MS35338-42	. Lock Washer	1	X	X	X	X	X	X	X
70	AN935-8	. Lock Washer (Superseded by MS35338-42)	1	X	X	X	X	X	X	X
80	MS35649-282	. Nut	1	X	X	X	X	X	X	X
80	AN340-8	. Nut (Superseded by MS35649-282)	1	X	X	X	X	X	X	X
90*	LW-13807	. Sniffer Valve Assembly	2			X	X	X	X	X
–	MS28775-015	. . O-Ring (Inside Sniffer Valve)	2			X	X	X	X	X
100	28-121000-19	. . Sniffer Valve Drain Tube	2	X	X	X	X	X	X	X
110	1	. Clamp	2	X	X	X	X	X	X	X

* Obtain from Lycoming Distributor

UNCONTROLLED COPY WHEN DOWNLOADED OR PRINTED

Visit www.enstromhelicopter.com for instructions to order an original manual and to register for email notification updates.

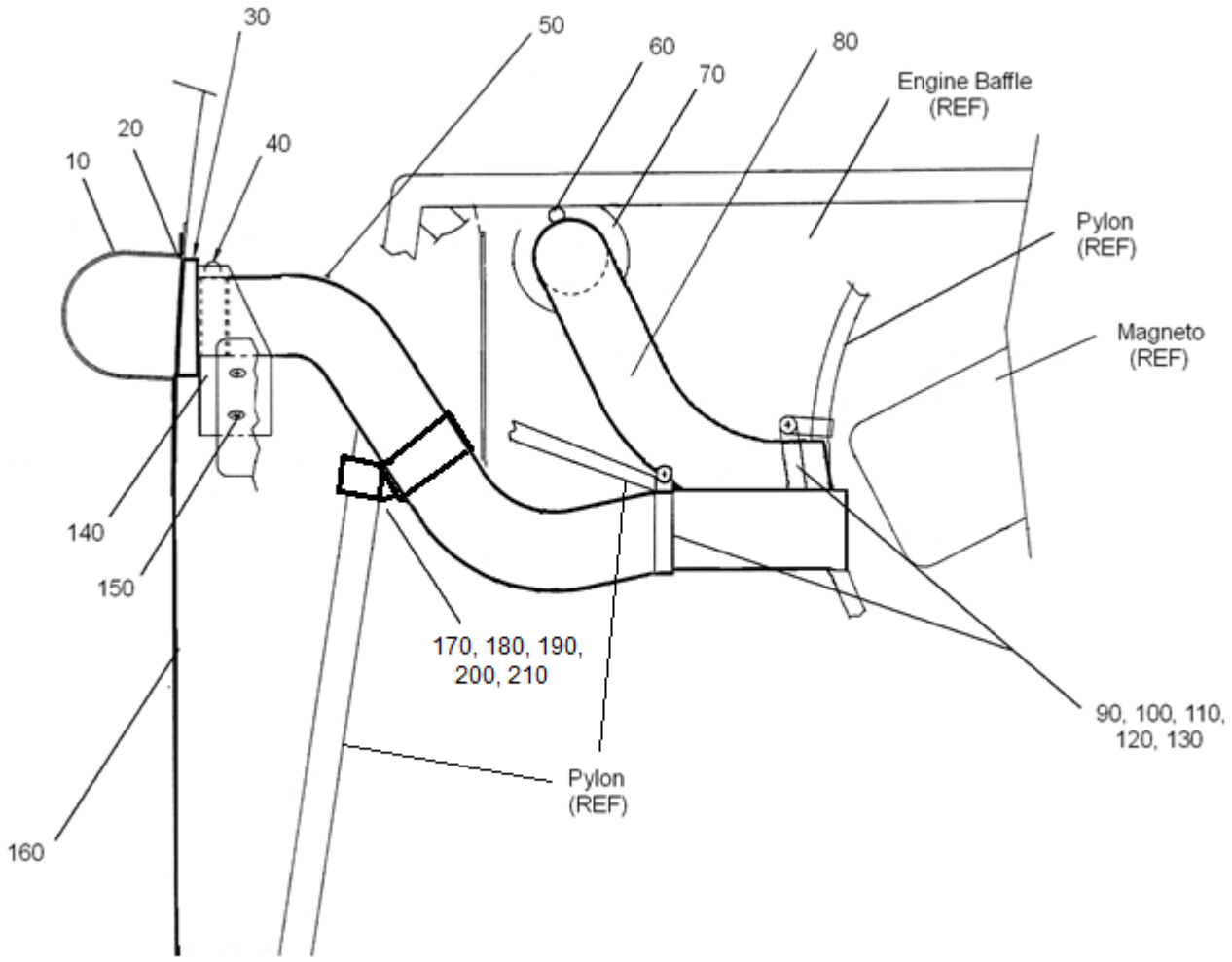

FIGURE 3-5.1 MAGNETO COOLING INSTALLATION

UNCONTROLLED COPY WHEN DOWNLOADED OR PRINTED
Visit www.enstromhelicopter.com for instructions to order an original manual and to register for email notification updates.

FIGURE 3-5.1. MAGNETO COOLING INSTALLATION

ITEM NUMBER	PART NUMBER	DESCRIPTION	QTY PER ASSY	MODELS AFFECTED						
				F-28A	280	F-28C	280C	F-28F	280F	280FX
–*	28-22031-1	Magneto Blast Tube Install Magneto Cooling	REF			X	X	X	X	X
10	28-12706-11	. . Deflector - Hot Air	1			X	X	X	X	X
20	MS20470AD3-3	. . Rivet: Solid, 3/32" X 0.188"	6			X	X	X	X	X
30	28-22034-11	. Seal Foam Magneto	1			X	X	X	X	X
40	QS200-M24S	. Clamp, Hose, 1.0625-2.0" Dia	2			X	X	X	X	X
50	400-003	. Duct, Silicone/Fiberglass, 1.750"	24”			X	X	X	X	X
50	SCEET 7	. Duct, Silicone/Fiberglass, 1.750" (Superseded by 400-003)	24”			X	X	X	X	X
60	QS200-M24S	. Clamp, Hose, 1.0625-2.0" Dia	2			X	X	X	X	X
70	280-127505-17	. Stub Heat Duct	1			X	X	X	X	X
80	400-003	. Duct, Silicone/Fiberglass, 1.750"	12”			X	X	X	X	X
80	SCEET 7	. Duct, Silicone/Fiberglass, 1.750" (Superseded by 400-003)	12”			X	X	X	X	X
90	AN742D28	. Clamp, Loop	2			X	X	X	X	X
100	MS21919WDG14	. Clamp, Loop	2			X	X	X	X	X
110	MS35207-262	. Screw, Mach (Ph), 10-32 X 0.438	2			X	X	X	X	X
120	NAS1149F0332P	. Washer, Flat	2			X	X	X	X	X
130	MS21083N3	. Nut: Hex, 190-32 UNJF-3B Thin	2			X	X	X	X	X
140	28-01058-3	. Cooling Kit Assy	1			X	X	X	X	X
–	28-01058-15	. . Bracket Magneto Cooling	1			X	X	X	X	X
150	AN526-1032R8	. . Screw, Mach (Th) 10-32 x 0.500	2			X	X	X	X	X
160	28-22032-1	. Cowl Lower Center 280FX	1			X	X	X	X	X
160	28-114016-7	. Cowl Lower Center F28F	1			X	X	X	X	X
170	AN742D28	. Clamp	1	X	X	X	X	X	X	X
180	MS21919WDG12	. Clamp	1	X	X	X	X	X	X	X
190	MS35207-262	. Screw	1	X	X	X	X	X	X	X

UNCONTROLLED COPY WHEN DOWNLOADED OR PRINTED

Visit www.enstromhelicopter.com for instructions to order an original manual and to register for email notification updates.

FIGURE 3-5.1. MAGNETO COOLING INSTALLATION

ITEM NUMBER	PART NUMBER	DESCRIPTION	QTY PER ASSY	MODELS AFFECTED						
				F-28A	280	F-28C	280C	F-28F	280F	280FX
200	NAS1149F0332P	. Washer	1	X	X	X	X	X	X	X
210	MS21083N3	. Nut	1	X	X	X	X	X	X	X

* Customer Service Use (excludes P/N 280-127505)

UNCONTROLLED COPY WHEN DOWNLOADED OR PRINTED

Visit www.enstromhelicopter.com for instructions to order an original manual and to register for email notification updates.

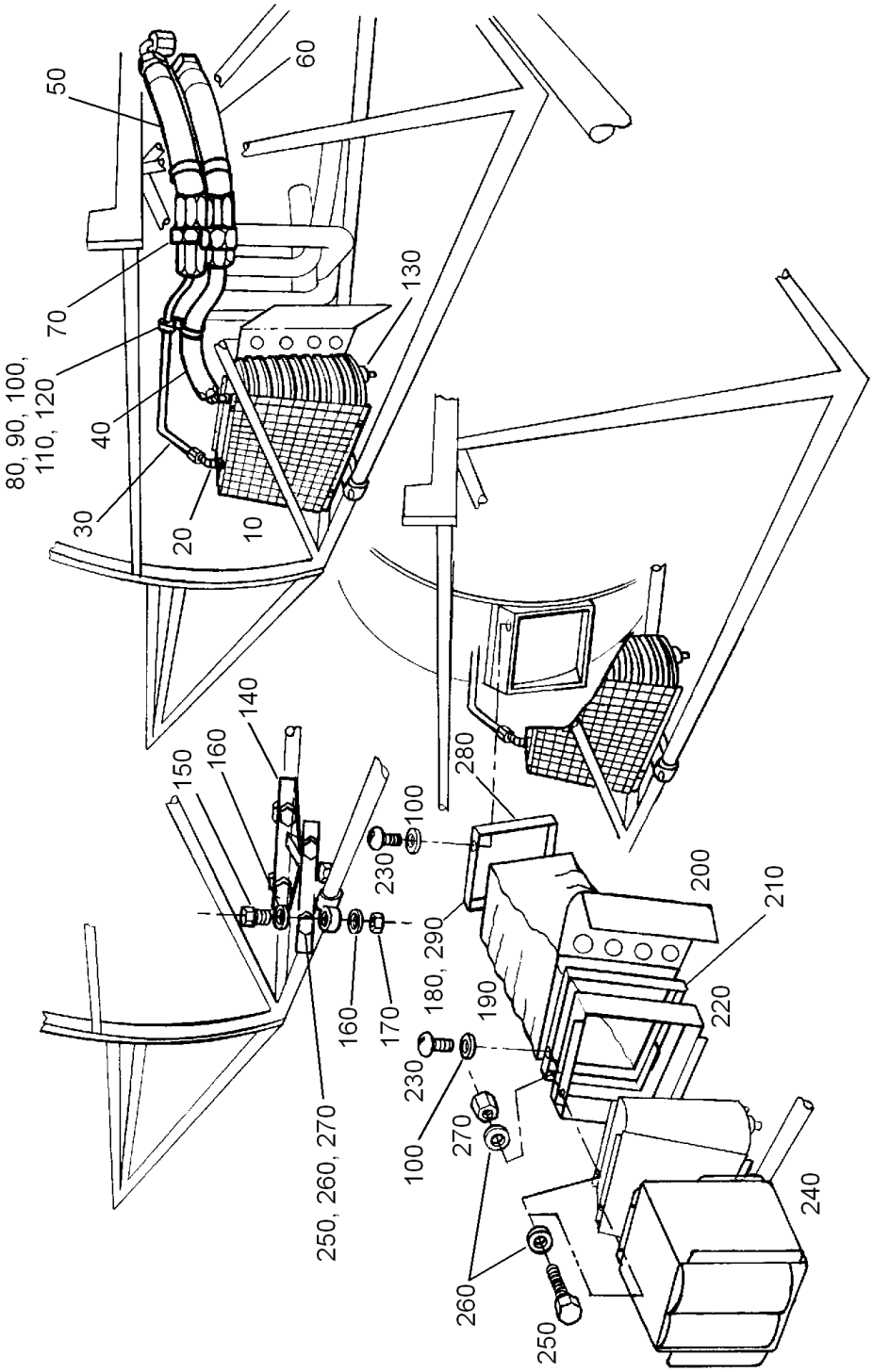

FIGURE 3-6. OIL COOLER INSTALLATION (A MODELS)

UNCONTROLLED COPY WHEN DOWNLOADED OR PRINTED
Visit www.enstromhelicopter.com for instructions to order an original manual and to register for email notification updates.

FIGURE 3-6. OIL COOLER INSTALLATION (A MODELS)

ITEM NUMBER	PART NUMBER	DESCRIPTION	QTY PER ASSY	MODELS AFFECTED						
				F-28A	280	F-28C	280C	F-28F	280F	280FX
10	20042A	. Oil Cooler Assembly	1	X	X					
10	AP18AU06-02	. Oil Cooler Assembly (Superseded by 20042A)	1	X	X					
20	MS-20823-6D	. Elbow, 45 Degrees, Flared	2	X	X					
20	AN823-6-6D	. Elbow (Obsolete)	2	X	X					
30	28-12100-904	. Oil Cooler Line (Obsolete)	1	X	X					
40	28-12100-903	. Oil Cooler Line (Obsolete)	1	X	X					
50	601002-6-0180	. Aero Quip Hose Assembly	1	X	X					
50	624117-6-0180	. Aero Quip Hose Assembly (Superseded by 601002-6-0180)	1	X	X					
60	624100-6-0180	. Aero Quip Hose Assembly (Obsolete)	1	X	X					
70	AN815-6	. Union	2	X	X					
80	MS21919-DF12	. Clamp	A/R	X	X					
80	MS21919-DF6	. Clamp	A/R	X	X					
90	MS35206-246	. Screw	A/R	X	X					
90	AN515-8R10	. Screw (Superseded by MS35206-246)	A/R	X	X					
100	NAS1149FN816P	. Washer	A/R	X	X					
100	AN960-8L	. Washer (Superseded by NAS1149FN816P)	A/R	X	X					
110	MS35338-42	. Lock Washer	A/R	X	X					
110	AN935-8	. Lock Washer (Superseded by MS35338-42)	A/R	X	X					
120	MS35649-282	. Nut	A/R	X	X					
120	AN340-8	. Nut (Superseded by MS35649-282)	A/R	X	X					
130	CCA-1600	. Drain Valve	1	X	X					
140	28-11112-1	. Oil Cooler Mounting Assembly	1	X	X					

UNCONTROLLED COPY WHEN DOWNLOADED OR PRINTED

Visit www.enstromhelicopter.com for instructions to order an original manual and to register for email notification updates.

FIGURE 3-6. OIL COOLER INSTALLATION (A MODELS)

ITEM NUMBER	PART NUMBER	DESCRIPTION	QTY PER ASSY	MODELS AFFECTED						
				F-28A	280	F-28C	280C	F-28F	280F	280FX
150	AN3-11A	. Bolt	4	X	X					
160	NAS1149F0363P	. Washer	8	X	X					
160	AN960-10	. Washer (Superseded by NAS1149FO363P)	8	X	X					
170	MS201044N3	. Nut	4	X	X					
170	AN365-1032A	. Nut (Superseded by MS201044N3)	4	X	X					
180	28-12623-1	. Bracket (Obsolete)	1	X						
190	28-12625-1	. Oil Cooler Boot	1	X						
190*	280-126002-1	. Oil Cooler Boot	1		X					
200	28-12626-13	. Heat Shield	1	X	X					
200	28-12626-1	. Heat Shield (Superseded by 28-12626-13)	1	X	X					
210	28-12624-1	. Retaining Strap (Obsolete)	1	X	X					
220	28-12618-5	. Air Duct Inlet	1	X	X					
220	28-12618-1	. Air Duct Inlet (Superseded by 28-12618-5)	1	X	X					
230	MS35206-244	. Screw	A/R	X	X					
230	AN515-8R7	. Screw (Superseded by MS35206-244)	A/R	X	X					
240*	280-126003-1	. Exit Duct Assembly	1		X					
250	AN3-4A	. Bolt	A/R	X	X					
260	NAS1149F0332P	. Washer	A/R	X	X					
260	AN960-10L	. Washer (Superseded by NAS1149F0332P)	A/R	X	X					
270	MS21044N3	. Nut	A/R	X	X					
270	AN365-1032A	. Nut (Superseded by MS21044N3)	A/R	X	X					
280*	280-126001-47	. Bracket	2		X					
290*	280-126001-45	. Bracket	2		X					

* Applicable to F-28A model aircraft equipped with the Exit Duct Assembly, P/N 280-126003-1.

UNCONTROLLED COPY WHEN DOWNLOADED OR PRINTED

Visit www.enstromhelicopter.com for instructions to order an original manual and to register for email notification updates.

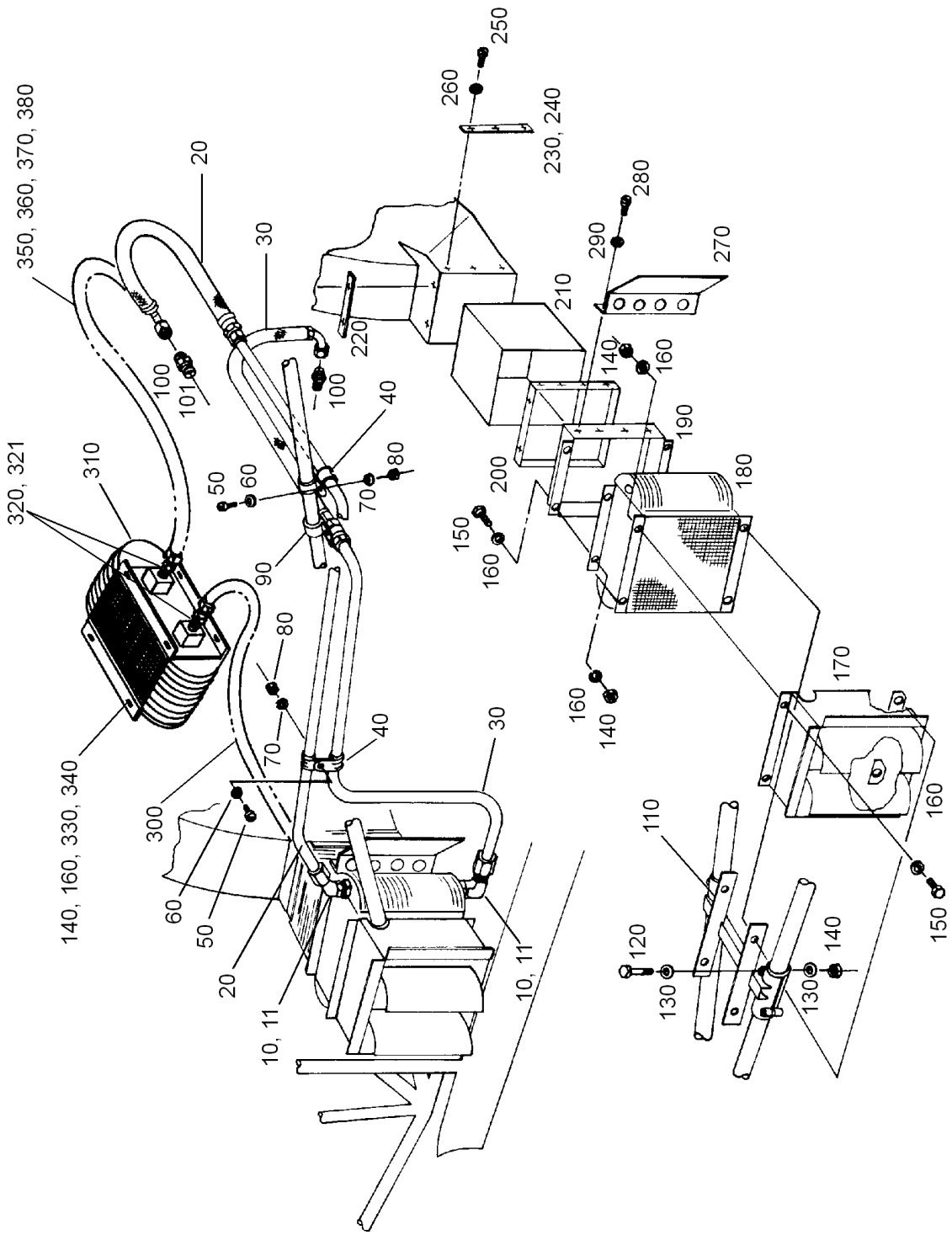

FIGURE 3-7. OIL COOLER INSTALLATION (C, F MODELS)

Visit www.enstromhelicopter.com for instructions to order an original manual and to register for email notification updates.

FIGURE 3-7. OIL COOLER INSTALLATION (C, F MODELS)

ITEM NUMBER	PART NUMBER	DESCRIPTION	QTY PER ASSY	MODELS AFFECTED						
				F-28A	280	F-28C	280C	F-28F	280F	280FX
–	28-121000-901	Oil Cooler Assembly	REF					X	X	X
10	848-FSO-10-08	. Adapter	2			X	X	X	X	X
11	MS28778-8	. O-Ring, N507-90, 0.644	2			X	X	X	X	X
20	28-121013-1	. Oil Line Assembly	1			X	X			
30	28-121014-1	. Oil Line Assembly	1			X	X	X	X	X
40	MS21919WF18	. Clamp	A/R			X	X	X	X	X
50	MS35206-246	. Screw	A/R			X	X	X	X	X
50	AN515-8R10	. Screw (Superseded by MS35206-246)	A/R			X	X	X	X	X
60	NAS1149FN816P	. Washer	A/R			X	X	X	X	X
60	AN960-8L	. Washer (Superseded by NAS1149FN816P)	A/R			X	X	X	X	X
70	MS353630-42	. Washer	A/R			X	X	X	X	X
70	AN935-8	. Washer (Superseded by MS353630-42)	A/R			X	X	X	X	X
80	MS35649-282	. Nut	A/R			X	X	X	X	X
80	AN340-8	. Nut (Superseded by MS35649-282)	A/R			X	X	X	X	X
90	MS21919WF12	. Clamp	A/R			X	X	X	X	X
90	MS21919WF14	. Clamp	A/R			X	X	X	X	X
100	28-123017-1	. Adapter Assembly	2			X	X	X	X	X
101	MS28778-8	. O-Ring, N507-90, 0.644	1			X	X	X	X	X
110	28-11112-1	. Oil Cooler Mount Assembly	1			X	X	X	X	X
120	AN3-11A	. Bolt	4			X	X	X	X	X
130	NAS1149F0363P	. Washer	8			X	X	X	X	X
130	AN960-10	. Washer (Superseded by NAS1149F0363P)	8			X	X	X	X	X
140	MS21044N3	. Nut	17			X	X	X	X	X
140	AN365-1032A	. Nut (Superseded by MS21044N3)	17			X	X	X	X	X
150	AN3-4A	. Bolt	A/R			X	X	X	X	X
160	NAS1149F0332P	. Washer	A/R			X	X	X	X	X

UNCONTROLLED COPY WHEN DOWNLOADED OR PRINTED

Visit www.enstromhelicopter.com for instructions to order an original manual and to register for email notification updates.

FIGURE 3-7. OIL COOLER INSTALLATION (C, F MODELS)

ITEM NUMBER	PART NUMBER	DESCRIPTION	QTY PER ASSY	MODELS AFFECTED						
				F-28A	280	F-28C	280C	F-28F	280F	280FX
160	AN960-10L	. Washer (Superseded by NAS1149F0332P)	A/R			X	X	X	X	X
170	280-126003-1	. Oil Cooler Exit Duct	1			X	X	X	X	X
180	20042A	. Oil Cooler	1			X	X	X	X	X
190	28-12618-5	. Air Duct Inlet	1			X	X			
190	28-12618-1	. Air Duct Inlet (Superseded by 28-12618-50)	1					X	X	X
200	28-12618-13	. Strap Oil Cooler Air Duct Inlet	2					X	X	X
200	28-12624-1	. Boot Retaining Strap (Superseded by 28-12618-13)	1			X	X			
210	280-126002-1	. Oil Cooler Boot	1			X	X	X	X	X
220	28-12654-11	. Fan Shroud	1					X	X	X
220	280-126001-45	. Strap (Obsolete)	2			X	X	X		
230	28-12654-13	. Fan Shroud	1					X	X	X
230	280-126001-47	. Strap (Obsolete)	2			X	X			
240	28-12664-11	. Fan Shroud	1					X	X	X
250	MS35206-244	. Screw	10			X	X			
250	AN515-8R7	. Screw (Superseded by MS35206-244)	10			X	X			
250	AN3-4A	. Bolt	8					X	X	X
260	NAS1149FN832P	. Washer	10			X	X			
260	AN960-8	. Washer (Superseded by NAS1149FN832P)	10			X	X			
260	NAS1149F0332P	. Washer	8					X	X	X
260	AN960-10L	. Washer (Superseded by NAS1149F0332P)	8					X	X	X
270	28-12626-13	. Heat Shield	1					X	X	X
270	28-12626-1	. Heat Shield (Superseded by 28-12626-13)	1			X	X			
280	MS35206-244	. Screw	A/R			X	X	X	X	X
280	AN515-8R7	. Screw (Superseded by MS35206-244)	A/R			X	X	X	X	X

UNCONTROLLED COPY WHEN DOWNLOADED OR PRINTED

Visit www.enstromhelicopter.com for instructions to order an original manual and to register for email notification updates.

FIGURE 3-7. OIL COOLER INSTALLATION (C, F MODELS)

ITEM NUMBER	PART NUMBER	DESCRIPTION	QTY PER ASSY	MODELS AFFECTED						
				F-28A	280	F-28C	280C	F-28F	280F	280FX
290	NAS1149FN832P	. Washer	A/R			X	X	X	X	X
290	AN960-8	. Washer (Superseded by NAS1149FN832P)	A/R			X	X	X	X	X
300*	28-12151-1	. Oil Line	1			X	X	X	X	X
310*	20206A	. Oil Cooler	1			X	X	X	X	X
320*	848-FSO-10-08	. Adapter	2			X	X	X	X	X
321	MS28778-8	. O-Ring, N507-90, 0.644	2			X	X	X	X	X
330*	AN3-5A	. Bolt	5			X	X	X	X	X
340*	28-12160-11	. Spacer	2			X	X	X	X	X
350*	28-12150-1	. Aux Oil Cooler Hose	1			X	X	X	X	X
360*	AN503-416-28	. Screw	2			X	X	X	X	X
370*	28-12158-11	. Clamp	2			X	X	X	X	X
380	NAS43HT4-64	. Spacer	2			X	X	X	X	X

* Applicable to F-28A model aircraft equipped with the Exit Duct Assembly, P/N 280-126003-1.

UNCONTROLLED COPY WHEN DOWNLOADED OR PRINTED

Visit www.enstromhelicopter.com for instructions to order an original manual and to register for email notification updates.

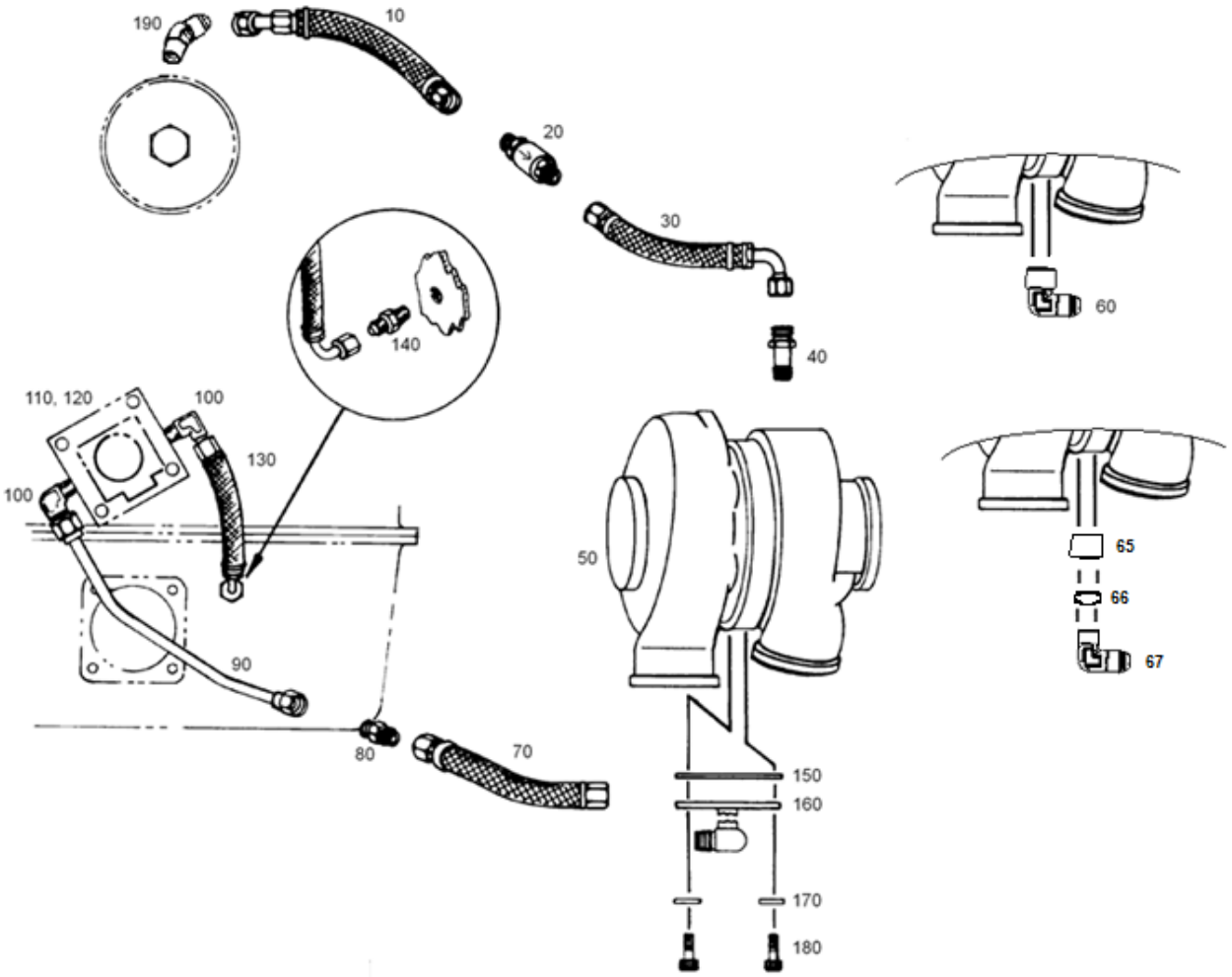

(C, F MODELS)

FIGURE 3-8. TURBOCHARGER OIL LINES

UNCONTROLLED COPY WHEN DOWNLOADED OR PRINTED

Visit www.enstromhelicopter.com for instructions to order an original manual and to register for email notification updates.

FIGURE 3-8. TURBOCHARGER OIL LINES

ITEM NUMBER	PART NUMBER	DESCRIPTION	QTY PER ASSY	MODELS AFFECTED						
				F-28A	280	F-28C	280C	F-28F	280F	280FX
10	28-121011-3	. Hose Assembly	1			X	X	X	X	X
20†	28-12134-15	. Check Valve	1			X	X	X	X	X
20	28-12134-13	. Check Valve (Superseded by 28-12134-15)	1			X	X	X	X	X
20	488-4D28-20	. Check Valve (Superseded by 28-12134-13)	1			X	X	X	X	X
30	28-121005-19	. Hose Assembly	1			X	X	X	X	X
40	AN816-4	. Nipple	1			X	X	X	X	X
40	AN816-4D	. Union, Aluminum (Superseded by AN816-4)	1			X	X	X	X	X
40	28-121012-11	. Oil Inlet Adapter (Obsolete)	1			X	X			
50	600700-0000	. Turbocharger	1			X	X	X	X	X
50	3BT5EE10J2	. Turbocharger (Superseded by 600700-0000)	1			X	X	X	X	X
50	325E10-2	. Turbocharger (Superseded by 3BT5EE10J2)	1			X	X			
60♦	28-12155-1	. Fitting (Replaces Items 150, 160, 170, and 180)	1			X	X	X	X	X
–*	28-12134-991	. Turbocharger Drain Fitting Kit	1					X		X
65*	28-12155-15	. . Adapter	1					X		X
66**	3-904 V0894-90	. . O-ring	1					X		X
67**	6-4 C5OX-S	. . Elbow	1					X		X
–**	28-125082-3	. . Bracket Weldment	1					X		X
70	28-124003-5	. Hose Assembly	1			X	X	X	X	X
80	AN815-6	. Union	1			X	X	X	X	X
90	28-121009-3	. Line Assembly Turbo Drain	1			X	X	X	X	X
100	MS20822-6-6	. Elbow Fitting	2			X	X	X	X	X
110	101678-0002	. Pump, Turbocharger Oil Scavenge	1			X	X	X	X	X
110	RJ-1045-2	. Pump, Turbocharger Oil Scavenge (Superseded by 101678-0002)	1			X	X	X	X	X
120	AS3494-01	. Gasket, Fuel Pump	2			X	X	X	X	X

UNCONTROLLED COPY WHEN DOWNLOADED OR PRINTED

Visit www.enstromhelicopter.com for instructions to order an original manual and to register for email notification updates.

FIGURE 3-8. TURBOCHARGER OIL LINES

ITEM NUMBER	PART NUMBER	DESCRIPTION	QTY PER ASSY	MODELS AFFECTED						
				F-28A	280	F-28C	280C	F-28F	280F	280FX
120	1691-C	. Gasket, Fuel Pump (Superseded by AS3494-01)	2			X	X	X	X	X
130	28-121011-1	. Hose Assembly	1			X	X	X	X	X
140	MS51500-B6-8	. Adapter	1			X	X	X	X	X
150	RJ-0370	. Gasket (No longer used)	1			X	X			
160*	28-125008-1	. Oil Drain Fitting Assembly (No longer used)	1			X	X			
170	NAS1149C0632R	. Washer (No longer used)	2			X	X			
170	AN960C616L	. Washer (No longer used)	2			X	X			
180	MS24674-45	. Bolt (No longer used)	2			X	X			
190	ECD110-11	. Restricted Fitting, Oil Gauge	1			X	X	X	X	X
190	02A22619	. Restricted Fitting, Oil Gauge (Alternate)	1			X	X	X	X	X

♦ Eligible: F-28C S/N 304, 331 – 508; 280C S/N 1020, 1023 – 1227; 280F S/N 1212, 1500 – 1519; F-28F S/N 509 – 831; 280FX S/N 2001 – 2146.

* Effective: F-28F S/N 832 and subsequent; 280FX S/N 2147 and subsequent.
Eligible: F-28C all S/N; 280C all S/N; F-28F S/N 509 and subsequent; 280FX S/N 2001 and subsequent if bracket P/N 28-125082-3 is installed (replacing P/N 28-125082-1). See Figure 3-29.

** Used with 28-12155-15 only.

† Effectivity F-28F/280FX S/N 833, 2169 and subsequent; Eligibility F-28C/280C all S/N, F-28F/280FX S/N 509, 2001 and subsequent.

UNCONTROLLED COPY WHEN DOWNLOADED OR PRINTED
Visit www.enstromhelicopter.com for instructions to order an original manual and to register for email notification updates.

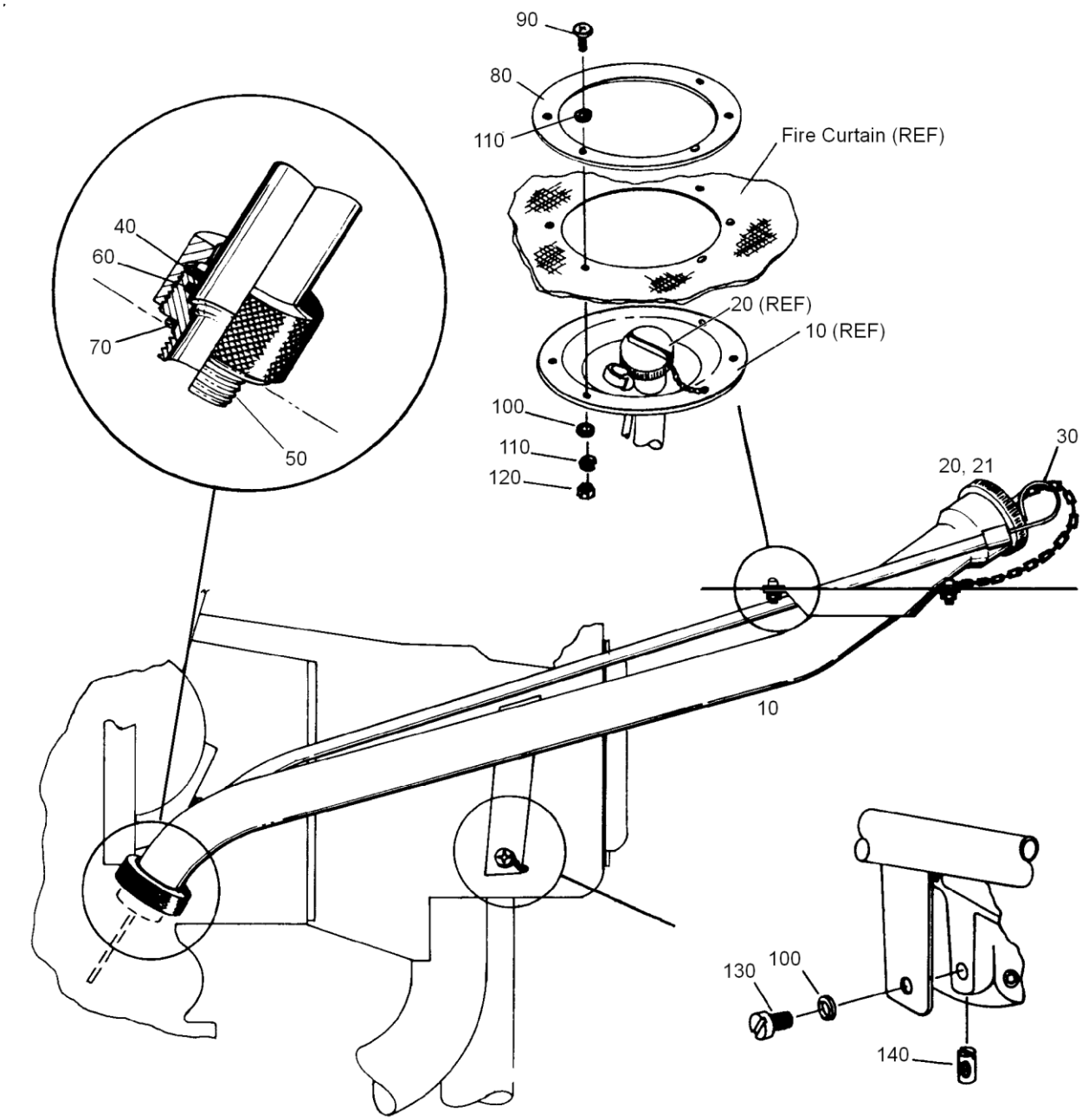

FIGURE 3-9. OIL FILL TUBE INSTALLATION

UNCONTROLLED COPY WHEN DOWNLOADED OR PRINTED
Visit www.enstromhelicopter.com for instructions to order an original manual and to register for email notification updates.

FIGURE 3-9. OIL FILL TUBE INSTALLATION

ITEM NUMBER	PART NUMBER	DESCRIPTION	QTY PER ASSY	MODELS AFFECTED						
				F-28A	280	F-28C	280C	F-28F	280F	280FX
10	28-12112-5	. Tube Assembly Oil Fill	1			X	X	X	X	X
10	28-12118-2	. Tube Assembly Oil Fill (Superseded by 28-12112-5)	1	X	X	X	X	X	X	X
10	28-12112-4	. Oil Fill Tube Assembly (Superseded by 28-12112-2)	1	X	X					
20	28-12122-1	. . Cap Assembly	1	X	X	X	X	X	X	X
21	1239	. . Oil Filler Cap Gasket	1	X	X	X	X	X	X	X
30	28-12125-1	. . Dip Stick Assembly	1	X	X					
30	28-121001-1	. . Dip Stick Assembly	1			X	X	X	X	X
40	2-218	. O-Ring	1	X	X	X	X	X	X	X
40	MS28775-218	. O-Ring (Alternate to 2-218)	1	X	X	X	X	X	X	X
50	28-12116-11	. Engine Adaptor	1	X	X	X	X	X	X	X
60	2-026	. O-Ring	1	X	X	X	X	X	X	X
60	MS28775-026	. O-Ring (Alternate to 2-026)	1	X	X	X	X	X	X	X
70	2-214	. O-Ring	1	X	X	X	X	X	X	X
70	MS28775-214	. O-Ring (Alternate to 2-214)	1	X	X	X	X	X	X	X
80	28-12127-11	. Ring, Support Scupper Oil	1	X	X	X	X	X	X	X
90	MS35206-244	. Screw	6	X	X	X	X	X	X	X
90	AN517-8R7	. Screw (Superseded by MS35206-244)	6	X	X	X	X	X	X	X
100	NAS1149FN816F	. Washer	13	X	X	X	X	X	X	X
100	AN960-8L	. Washer (Superseded by NAS1149FN816F)	13	X	X	X	X	X	X	X
110	MS35338-42	. Lock Washer	6	X	X	X	X	X	X	X
110	AN935-8	. Lock Washer (Superseded by MS35338-42)	6	X	X	X	X	X	X	X
120	MS35649-282	. Nut	6	X	X	X	X	X	X	X
120	AN340-832	. Nut (Superseded by MS35649-282)	6	X	X	X	X	X	X	X
130	AN502-10-8	. Screw	1	X	X	X	X	X	X	X

UNCONTROLLED COPY WHEN DOWNLOADED OR PRINTED

Visit www.enstromhelicopter.com for instructions to order an original manual and to register for email notification updates.

FIGURE 3-9. OIL FILL TUBE INSTALLATION

ITEM NUMBER	PART NUMBER	DESCRIPTION	QTY PER ASSY	MODELS AFFECTED						
				F-28A	280	F-28C	280C	F-28F	280F	280FX
140*	65614	. Plug, Attaching	1	X	X	X	X	X	X	X
150	NAS1149F0332P	. Washer, Flat	1	X	X	X	X	X	X	X

* Obtain from Lycoming Distributor.

UNCONTROLLED COPY WHEN DOWNLOADED OR PRINTED

Visit www.enstromhelicopter.com for instructions to order an original manual and to register for email notification updates.

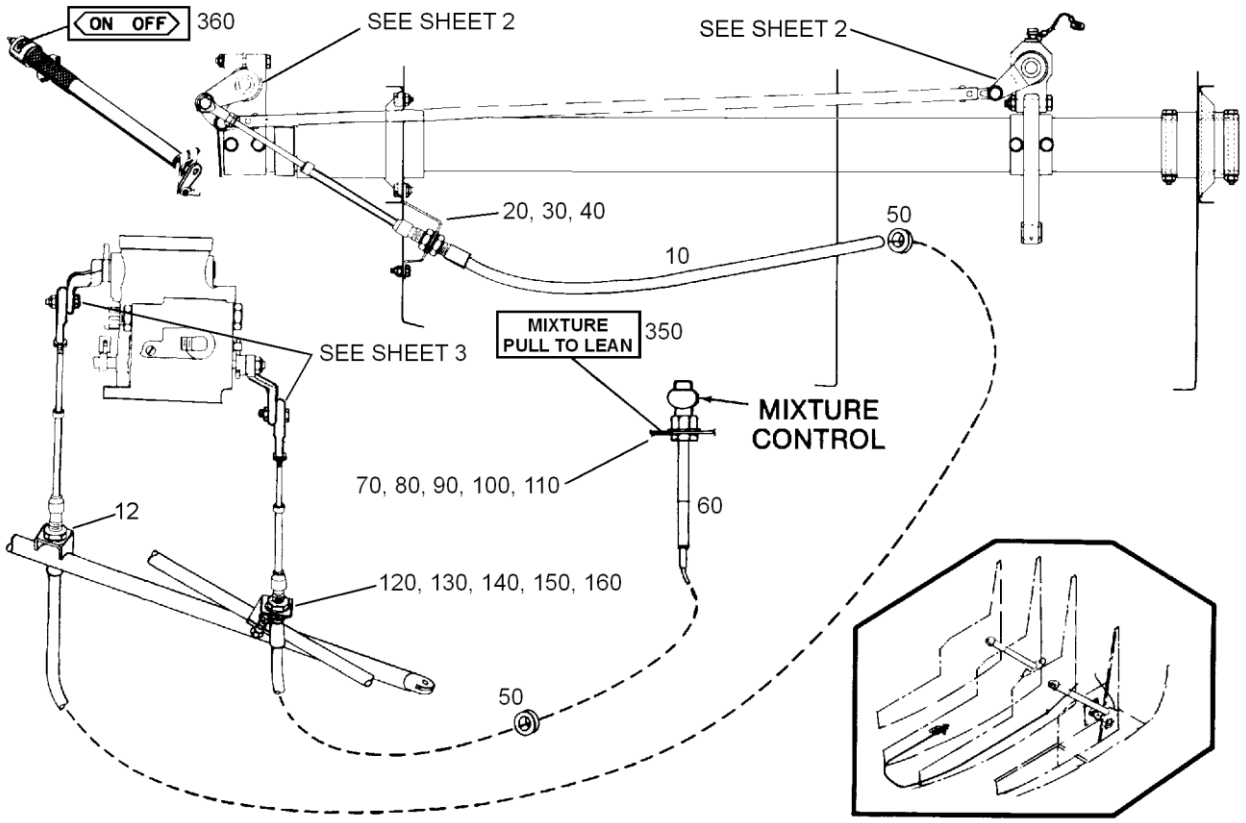

Sheet 1 of 3

FIGURE 3-10. THROTTLE AND MIXTURE CONTROL INSTALLATION (A, C MODELS)

UNCONTROLLED COPY WHEN DOWNLOADED OR PRINTED
Visit www.enstromhelicopter.com for instructions to order an original manual and to register for email notification updates.

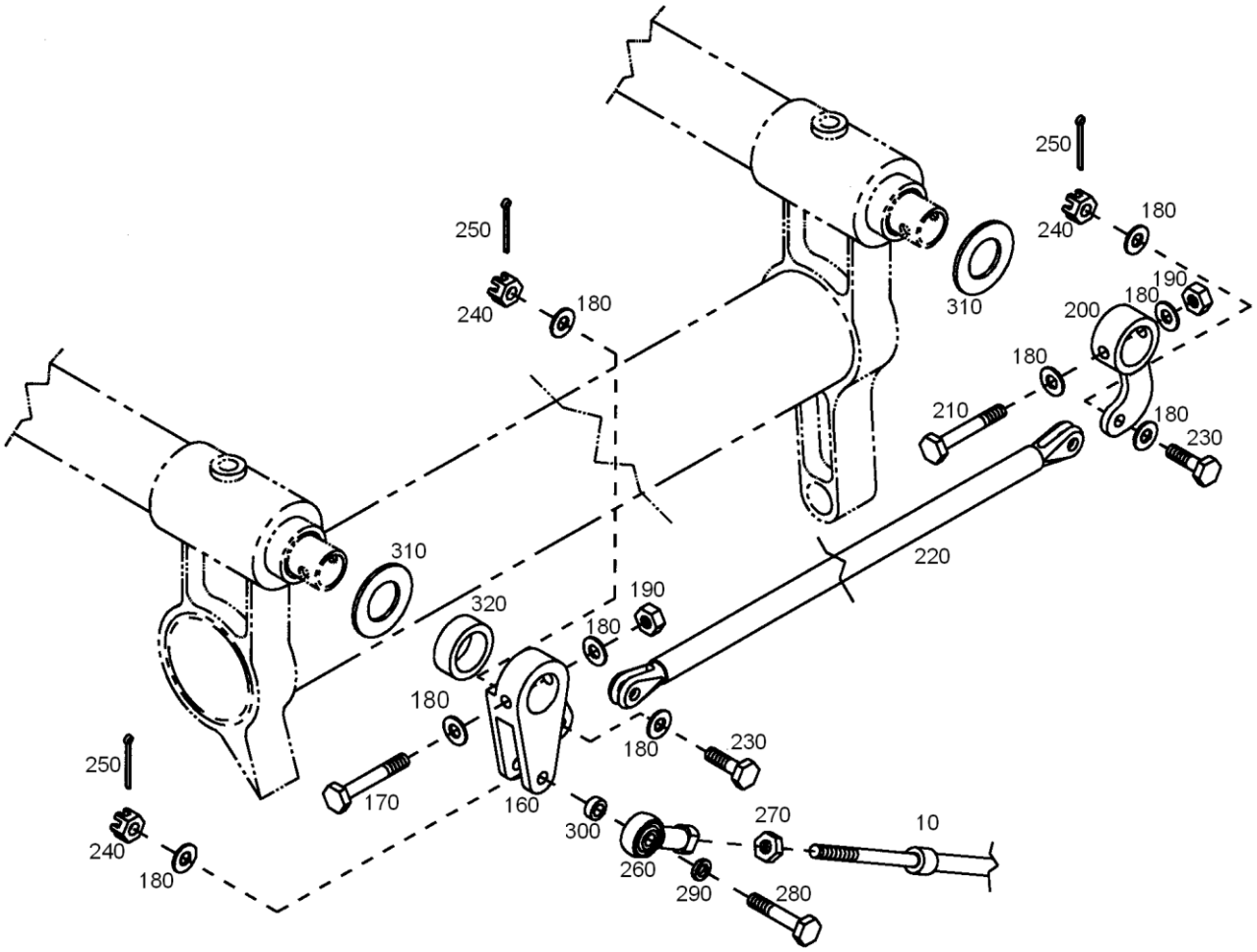

Sheet 2 of 3

FIGURE 3-10. THROTTLE AND MIXTURE CONTROL INSTALLATION (A, C MODELS)

UNCONTROLLED COPY WHEN DOWNLOADED OR PRINTED

Visit www.enstromhelicopter.com for instructions to order an original manual and to register for email notification updates.

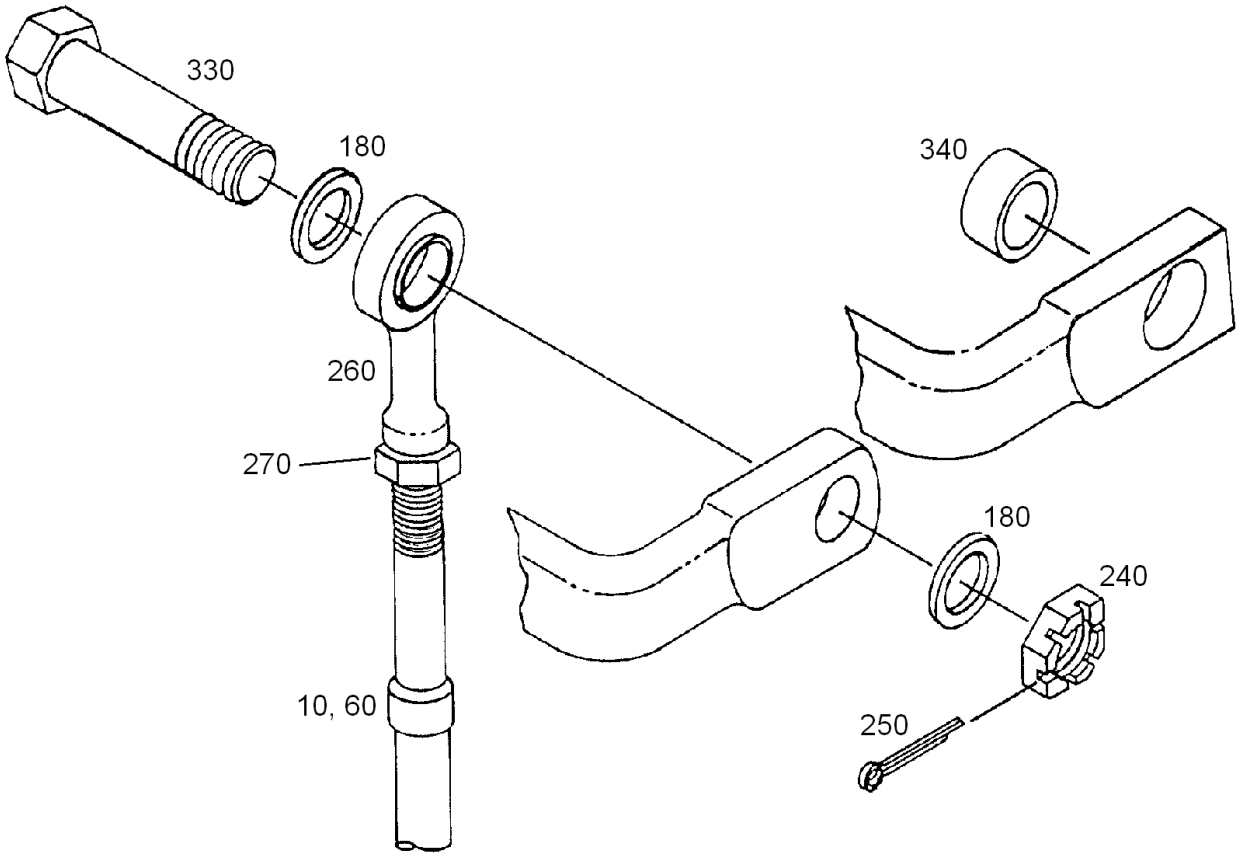

Sheet 3 of 3

FIGURE 3-10. THROTTLE AND MIXTURE CONTROL INSTALLATION (A, C MODELS)

UNCONTROLLED COPY WHEN DOWNLOADED OR PRINTED

Visit www.enstromhelicopter.com for instructions to order an original manual and to register for email notification updates.

FIGURE 3-10. THROTTLE AND MIXTURE CONTROL INSTALLATION (A, C MODELS)

ITEM NUMBER	PART NUMBER	DESCRIPTION	QTY PER ASSY	MODELS AFFECTED						
				F-28A	280	F-28C	280C	F-28F	280F	280FX
10	65-4527-2229	. Throttle Control Cable	1	X	X	X	X			
20	28-16447-1	. Bracket (Obsolete)	1	X		X				
20	280-113006-19	. Throttle Bracket (Obsolete)	1		X		X			
30	AN3-4A	. Bolt	4	X	X	X	X			
40	MS21044N3	. Nut	4	X	X	X	X			
40	AN365-1032A	. Nut (Superseded by MS21044N3)	4	X	X	X	X			
50	AN931-5-9	. Grommet	3		X	X	X			
60	57-3255-2121	. Mixture Control Cable	1	X	X	X	X			
60	3A1535-B96-A100	. Mixture Control Cable (Obsolete)	1	X						
60	3A-3140	. Mixture Control Cable (Obsolete)	1	X						
70*	28-164001-1	. Bracket	1	X		X				
70**	28-16405-1	. Bracket	1	X						
80	AN526-832R7	. Screw	4	X		X				
80	AN526-8R7	. Screw (Superseded by AN526-832R7)	4	X		X				
90	NAS1149FN816P	. Washer	8	X		X				
90	AN960-8L	. Washer (Superseded by NAS1149FN816P)	8	X		X				
100	MS21044N08	. Nut	4	X		X				
100	AN365-832A	. Nut (Superseded by MS21044N08)	4	X		X				
110	NAS1149F1232P	. Washer	1	X	X	X	X			
110	AN960-1216L	. Washer (Superseded by NAS1149F1232P)	1	X	X	X	X			
110**	NAS1149F0632P	. Washer	1	X						
110**	AN960-616L	. Washer (Superseded by NAS1149F0632P)	1	X						
120	NAS1149F0732P	. Washer	2	X	X	X	X			
120	AN960-716L	. Washer (Superseded by NAS1149F0732P)	2	X	X	X	X			
130	28-111004-1	. Bracket	1			X	X			
140	AN3-10A	. Bolt	2			X	X			

UNCONTROLLED COPY WHEN DOWNLOADED OR PRINTED

Visit www.enstromhelicopter.com for instructions to order an original manual and to register for email notification updates.

FIGURE 3-10. THROTTLE AND MIXTURE CONTROL INSTALLATION (A, C MODELS)

ITEM NUMBER	PART NUMBER	DESCRIPTION	QTY PER ASSY	MODELS AFFECTED						
				F-28A	280	F-28C	280C	F-28F	280F	280FX
150	NAS1149F0332P	. Washer	4			X	X			
150	AN960-10L	. Washer (Superseded by NAS1149F0332P)	4			X	X			
160	AN365-1032A	. Nut	2			X	X			
160	28-16168-1	. Bellcrank (Pilot)	1	X	X	X	X			
170	AN3-13A	. Bolt	1	X	X	X	X			
180	NAS1149F0332P	. Washer	13	X	X	X	X			
180	AN960-10L	. Washer (Superseded by NAS1149F0332P)	13	X	X	X	X			
190	MS21044N3	. Nut	2	X	X	X	X			
190	AN364-1032A	. Nut (Superseded by MS21044N3)	2	X	X	X	X			
200	28-16407-1	. Bellcrank (Copilot)	1	X	X	X	X			
210	AN3-12A	. Bolt	1	X	X	X	X			
220	28-16401-1	. Tie Rod Assembly	1	X		X				
220	28-16401-5	. Tie Rod Assembly	1		X		X			
230	AN3-5	. Bolt	2	X	X	X	X			
240	MS17825-3	. Nut	5	X	X	X	X			
240	F12-NE-4753-02	. Nut (Superseded by MS17825-3)	5	X	X	X	X			
250	MS24665-151	. Cotter Pin	5	X	X	X	X			
250	AN381-2-8	. Cotter Pin (Superseded by MS24665-151)	5	X	X	X	X			
260	HFVV-3M	. Rod End	3	X	X	X	X			
270	AN315-3R	. Nut	3	X	X	X	X			
280	AN3-10	. Bolt	1	X	X	X	X			
290	28-16403-1	. Spacer (Obsolete)	1	X	X	X	X			
300	28-16404-1	. Spacer, Rod End	1	X	X	X	X			
310≡	G08DU	. Washer	1	X	X					
310≡	G08DU	. Washer	2			X	X			
320	28-16006-1	. Spacer (Obsolete)	1			X	X			
330	AN3-7	. Bolt	2	X	X	X	X			

UNCONTROLLED COPY WHEN DOWNLOADED OR PRINTED

Visit www.enstromhelicopter.com for instructions to order an original manual and to register for email notification updates.

FIGURE 3-10. THROTTLE AND MIXTURE CONTROL INSTALLATION (A, C MODELS)

ITEM NUMBER	PART NUMBER	DESCRIPTION	QTY PER ASSY	MODELS AFFECTED						
				F-28A	280	F-28C	280C	F-28F	280F	280FX
340†	28-164043-11	. Bushing	2	X	X	X	X			
350**	28-16449-1	. Placard, Full Mixture	1	X						
350	28-18075-1	. Placard, Pull For Idle	1	X	X	X	X			
360	28-16215-1	. Placard, ON-OFF	1	X	X	X	X			

* Use with “wide” instrument panel.

** Use with obsolete mixture control cable, P/N 3A1535-B96-A100 or 3A-3140.

† Only required if fuel injector throttle or mixture arms have a 0.25" bolt hole.

≡ See Appendix A for equivalent part information.

UNCONTROLLED COPY WHEN DOWNLOADED OR PRINTED

Visit www.enstromhelicopter.com for instructions to order an original manual and to register for email notification updates.

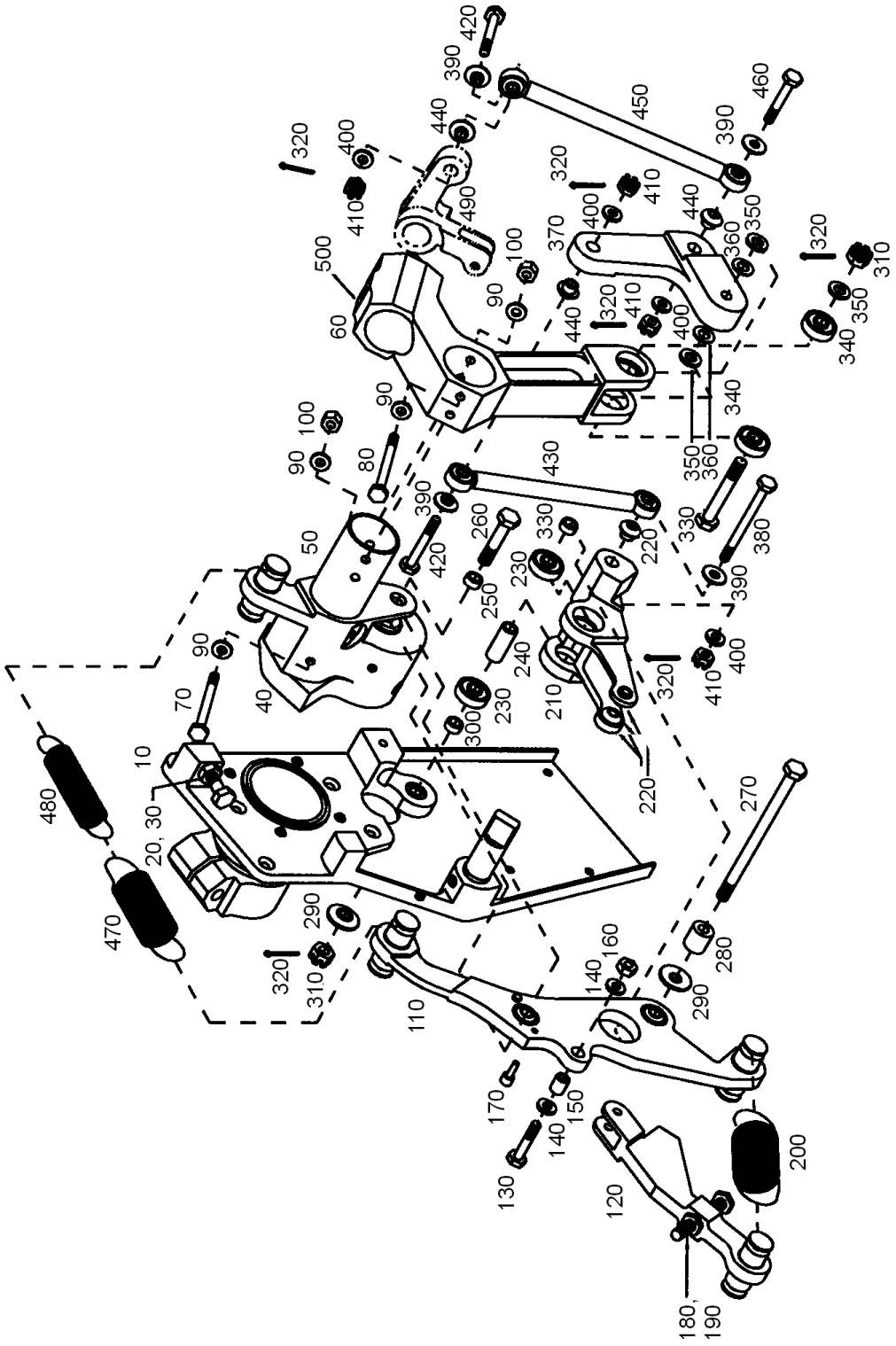

FIGURE 3-11. THROTTLE CORRELATOR ASSEMBLY (F MODELS)

UNCONTROLLED COPY WHEN DOWNLOADED OR PRINTED

Visit www.enstromhelicopter.com for instructions to order an original manual and to register for email notification updates.

FIGURE 3-11. THROTTLE CORRELATOR ASSEMBLY (F MODELS)

ITEM NUMBER	PART NUMBER	DESCRIPTION	QTY PER ASSY	MODELS AFFECTED						
				F-28A	280	F-28C	280C	F-28F	280F	280FX
10	28-16096-3	. Plate Assembly	1					X	X	X
10	28-16096-1	. Plate Assembly (Superseded by 28-16096-3)	1					X	X	X
20	NAS428K4A16	. . Bolt	1					X	X	X
20	NAS428K4-16	. . Bolt (Superseded by NAS428K4A16)	1					X	X	X
–	AN316-4R	. . Jam Nut	1					X	X	X
–	28-16080-901	. Offset Tube and Socket Assembly	1					X	X	X
40	28-16421-1	. . Offset Tube Assembly	1					X	X	X
50	28-16088-13	. . Tube	1					X	X	X
60	28-16409-15	. . Socket Control Throttle	1					X	X	X
60	28-16409-13	. . Socket Control Throttle (Replaced by 28-16409-15)	1					X	X	X
70	AN173-17A	. . Bolt	2					X	X	X
80	AN173-21A	. . Bolt	2					X	X	X
90	NAS1149F0363P	. . Washer	8					X	X	X
90	AN960-10	. . Washer (Superseded by NAS1149F0363P)	8					X	X	X
100	MS21044N3	. . Nut	4					X	X	X
100	AN365-1032A	. . Nut (Superseded by MS21044N3)	4					X	X	X
–	28-16478-3	. Pivot Support Assembly	1					X	X	X
–	28-16478-5	. Pivot Support Assembly (Superseded by 28-16478-3)	1					X	X	X
110	28-16479-13	. . Pivot Support Plate	1					X	X	X
120	28-16484-11	. . Clapper	1					X	X	X
130	NAS6603-10	. . Bolt	1					X	X	X
130	AN3-10A	. . Bolt (Superseded by NAS6603-10)	1					X	X	X
140	NAS1149F0363P	. . Washer	2					X	X	X
140	AN960-10	. . Washer (Superseded by NAS1149F0363P)	2					X	X	X
150	28-16476-2	. . Bushing	1					X	X	X

UNCONTROLLED COPY WHEN DOWNLOADED OR PRINTED

Visit www.enstromhelicopter.com for instructions to order an original manual and to register for email notification updates.

FIGURE 3-11. THROTTLE CORRELATOR ASSEMBLY (F MODELS)

ITEM NUMBER	PART NUMBER	DESCRIPTION	QTY PER ASSY	MODELS AFFECTED						
				F-28A	280	F-28C	280C	F-28F	280F	280FX
160	MS21083N3	. . Nut	1					X	X	X
160	AN364-1032A	. . Nut (Superseded by MS21083N3)	1					X	X	X
170	28-16098-11	. . Stop Pin	2					X	X	X
180	NAS428K4-16	. . Bolt	1					X	X	X
190	AN316-4R	. . Nut	1					X	X	X
200	MS24586-C346	. . Spring	2					X	X	X
–	28-16481-5	. Output Lever Assembly	1					X	X	X
210	28-16482-13	. . Output Lever	1					X	X	X
220	28-16473-1	. . Bushing	3					X	X	X
230	KP4A	. . Bearing	2					X	X	X
240	28-16477-1	. Spacer	1					X	X	X
250	28-16476-3	. Bushing	1					X	X	X
260	AN4H-12A	. Bolt	1					X	X	X
270	NAS6604D56	. Bolt	1					X	X	X
270	AN4-37	. Bolt (Superseded by NAS6604D56)	1					X	X	X
280	28-16074-11	. Spacer	1					X	X	X
290	28-16087-11	. Washer	2					X	X	X
300	28-16477-2	. Spacer	2					X	X	X
310	F12-NE-4753-048	. Nut	2					X	X	X
310	MS17825-4	. Nut (Alternate to F12-NE-4753-048)	2					X	X	X
320	MS24665-151	. Cotter Pin	6					X	X	X
320	AN381-2-8	. Cotter Pin (Superseded by MS24665-151)	6					X	X	X
330	NAS6604D21	. Bolt	1					X	X	X
330	AN4-16	. Bolt (Superseded by NAS6604D21)	1					X	X	X
340	KP4A	. Bearing	2					X	X	X
350	NAS1149F0463P	. Washer	3					X	X	X

UNCONTROLLED COPY WHEN DOWNLOADED OR PRINTED

Visit www.enstromhelicopter.com for instructions to order an original manual and to register for email notification updates.

FIGURE 3-11. THROTTLE CORRELATOR ASSEMBLY (F MODELS)

ITEM NUMBER	PART NUMBER	DESCRIPTION	QTY PER ASSY	MODELS AFFECTED						
				F-28A	280	F-28C	280C	F-28F	280F	280FX
350	AN960-416	. Washer (Superseded by NAS1149F0463P)	3					X	X	X
360	NAS1149F0432P	. Washer	2					X	X	X
360	AN960-416L	. Washer (Superseded by NAS1149F0432P)	2					X	X	X
370	28-16021-11	. Bellcrank	1					X	X	X
380	NAS6603D30	. Bolt	1					X	X	X
380	AN3-22	. Bolt (Superseded by NAS6603D30)	1					X	X	X
390	28-16087-13	. Washer	4					X	X	X
400	NAS1149F0363P	. . Washer	4					X	X	X
400	AN960-10	. . Washer (Superseded by NAS1149F0363P)	4					X	X	X
410	F12-NE-4753-02	. Nut	4					X	X	X
410	MS17825-3	. Nut (Alternate to F12-NE-4753-02)	4					X	X	X
420	NAS6603D16	. Bolt	2					X	X	X
420	AN3-13	. Bolt (Superseded by NAS6603D16)	2					X	X	X
430	28-16498-9	. Tie Rod	1					X	X	X
440	28-16473-1	. Bushing	3					X	X	X
450	28-16498-101	. Tie Rod Assembly	1					X	X	X
450*	28-16498-9	. Tie Rod	1					X		
460	NAS6603D14	. Bolt	1					X	X	X
460	AN3-12	. Bolt (Superseded by NAS6603D14)	1					X	X	X
470≡	MS24586C311	. Spring	2					X	X	X
480≡	MS24586C234	. Spring	2					X	X	X
490	28-16022-11	. Bell Crank	1					X	X	X
500	28-16011-1	. Bolt Control Collective	1					X	X	X
–	NAS1149F0532P	. Washer, Flat	1					X	X	X
–	28-113107-11	. Throttle Correlator Spacer (0.032”)	A/R					X	X	X

UNCONTROLLED COPY WHEN DOWNLOADED OR PRINTED

Visit www.enstromhelicopter.com for instructions to order an original manual and to register for email notification updates.

FIGURE 3-11. THROTTLE CORRELATOR ASSEMBLY (F MODELS)

ITEM NUMBER	PART NUMBER	DESCRIPTION	QTY PER ASSY	MODELS AFFECTED						
				F-28A	280	F-28C	280C	F-28F	280F	280FX
–	28-113107-13	. Throttle Correlator Spacer (0.025”)	A/R					X	X	X
–	28-113107-15	. Throttle Correlator Spacer (0.016”)	A/R					X	X	X
–	28-113108-11	. Collective Stop Plate (0.032“)	A/R					X	X	X
–	28-113108-13	. Collective Stop Plate (0.025“)	A/R					X	X	X
–	28-113108-15	. Collective Stop Plate (0.016“)	A/R					X	X	X

* Used on S/N 506, 507, and 509 through 736.

≡ See Appendix A for equivalent part information.

UNCONTROLLED COPY WHEN DOWNLOADED OR PRINTED

Visit www.enstromhelicopter.com for instructions to order an original manual and to register for email notification updates.

INTENTIONALLY LEFT BLANK

UNCONTROLLED COPY WHEN DOWNLOADED OR PRINTED
Visit www.enstromhelicopter.com for instructions to order an original manual and to register for email notification updates.

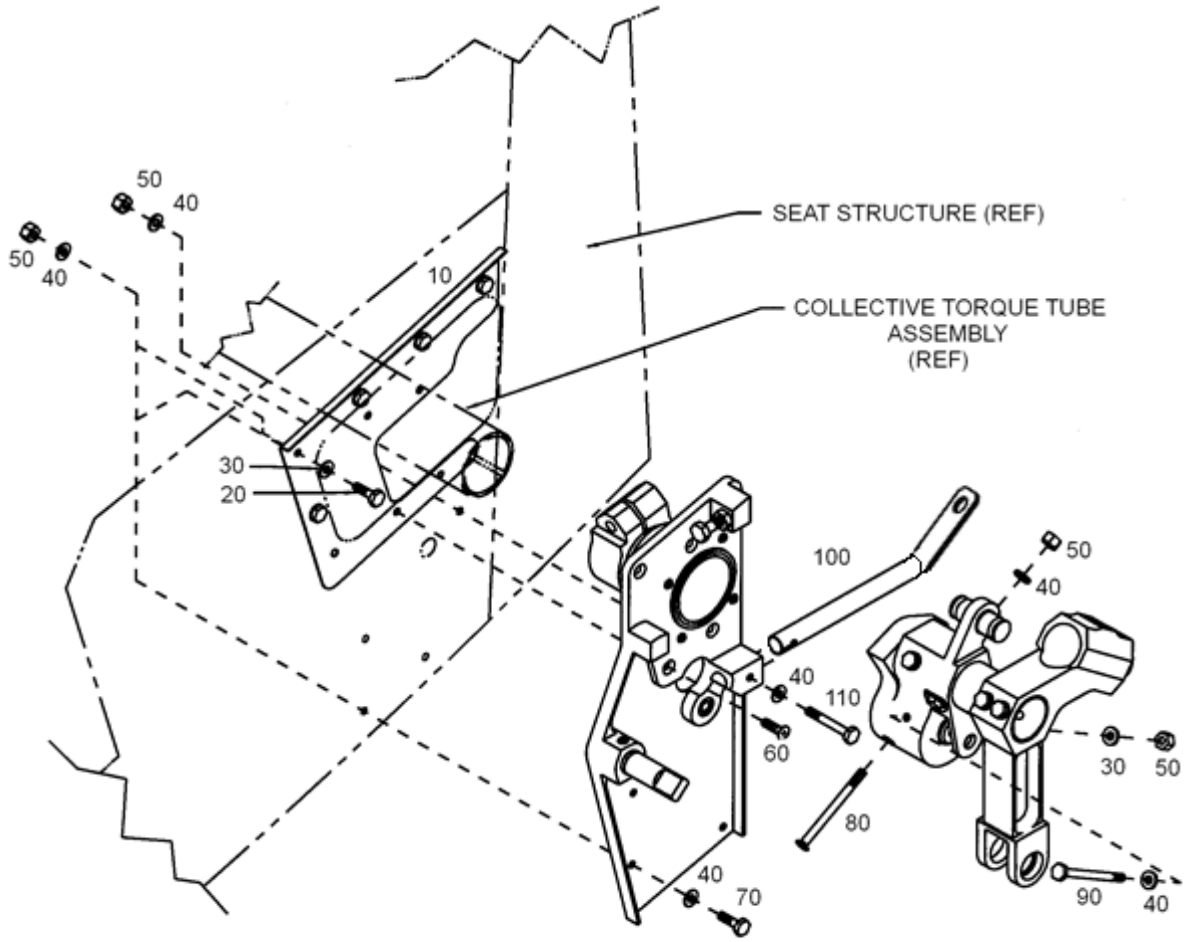

FIGURE 3-12. THROTTLE CORRELATOR INSTALLATION (F MODELS)

UNCONTROLLED COPY WHEN DOWNLOADED OR PRINTED

Visit www.enstromhelicopter.com for instructions to order an original manual and to register for email notification updates.

FIGURE 3-12. THROTTLE CORRELATOR INSTALLATION (F MODELS)

ITEM NUMBER	PART NUMBER	DESCRIPTION	QTY PER ASSY	MODELS AFFECTED						
				F-28A	280	F-28C	280C	F-28F	280F	280FX
10	28-11298-13	. Doubler	1					X	X	X
20	AN3-4A	. Bolt	5					X	X	X
30	NAS1149F0363P	. Washer	6					X	X	X
30	AN960-10	. Washer (Superseded by NAS1149F0363P	6					X	X	X
40	NAS1149F0332P	. Washer	16					X	X	X
40	AN960-10L	. Washer (Superseded by NAS1149F0332P)	16					X	X	X
50	MS21044N3	. Nut	16					X	X	X
50	AN365-1032A	. Nut (Superseded by MS21044N3)	16					X	X	X
60	MS24694-52	. Screw	4					X	X	X
70	AN3-5A	. Bolt	4					X	X	X
80	AN509-10R38	. Screw	1					X	X	X
80	MS24694-80	. Screw (Superseded by AN509-10R38)	1					X	X	X
90	AN3-23A	. Bolt	1					X	X	X
▌ 100*◊	28-16499-9	. Cable Support Assembly	1					X	X	X
▌ 100**◊	28-16499-101	. Cable Support Assembly	1					X	X	X
110	AN3-13A	. Bolt	1					X	X	X

* F-28F S/N 830 and prior; 280FX S/N 2136 and prior.

** F-28F S/N 831 and subsequent; 280FX S/N 2137 and subsequent.

▌ ◊ For related info, refer also to online Enstrom Tech Tip, (Engine) *Throttle Cable Installation Repair*.

UNCONTROLLED COPY WHEN DOWNLOADED OR PRINTED

Visit www.enstromhelicopter.com for instructions to order an original manual and to register for email notification updates.

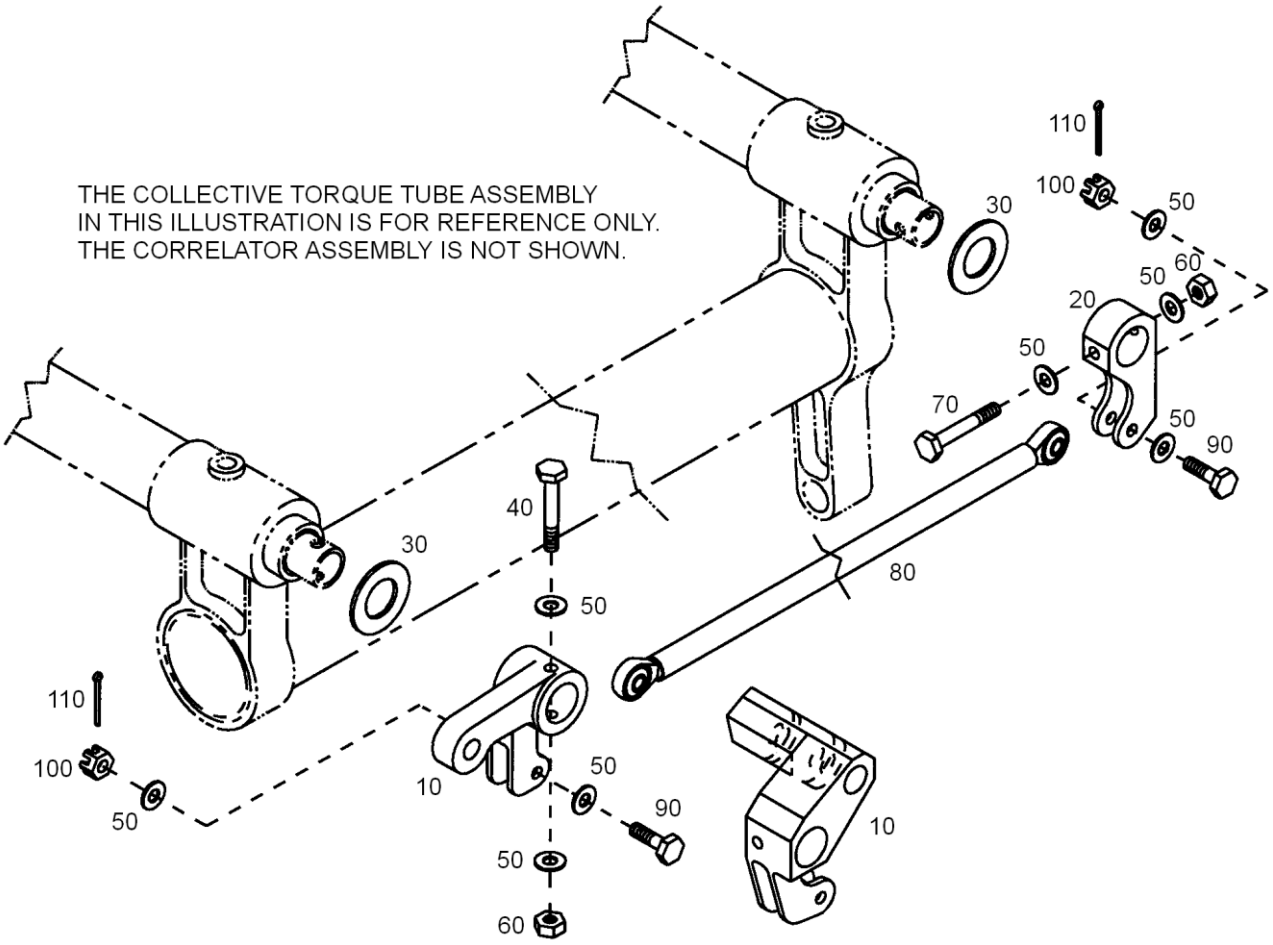

FIGURE 3-13. DUAL THROTTLE CONTROL INSTALLATION (F MODELS)

UNCONTROLLED COPY WHEN DOWNLOADED OR PRINTED

Visit www.enstromhelicopter.com for instructions to order an original manual and to register for email notification updates.

FIGURE 3-13. DUAL THROTTLE CONTROL INSTALLATION (F MODELS)

ITEM NUMBER	PART NUMBER	DESCRIPTION	QTY PER ASSY	MODELS AFFECTED						
				F-28A	280	F-28C	280C	F-28F	280F	280FX
10	28-16022-11	. Bellcrank	1					X	X	X
10*	28-16493-13	. Bellcrank	1					X		X
10**	28-16493-11	. Bellcrank	1					X		X
20	28-16497-1	. Bellcrank Lever	1					X	X	X
30≡	G08DU	. Washer	2					X	X	X
40	AN3-13A	. Bolt	1					X	X	X
50	NAS1149F0332P	. Washer	8					X	X	X
50	AN960-10L	. Washer (Superseded by NAS1149F0332P)	8					X	X	X
60	MS21083N3	. Nut	2					X	X	X
60	AN364-1032A	. Nut (Superseded by MS21083N3)	2					X	X	X
70	AN3-12A	. Bolt	1					X	X	X
80	28-16498-7	. Tie Rod Assembly	1					X	X	X
80†	28-16498-101	. Tie Rod Assembly	1					X		X
90	AN3-6	. Bolt	2					X	X	X
100	MS17825-3	. Nut	2					X	X	X
100	F12-NE-4753-02	. Nut (Superseded by MS17825-3)	2					X	X	X
110	MS24665-151	. Cotter Pin	2					X	X	X
110	AN381-2-8	. Cotter Pin (Superseded by MS24665-151)	2					X	X	X

* Used on S/N 704 and 706 through 736.

** Used on S/N 506, 507, 509 through 703, and 705.

† Used on S/N 506, 507, 509 through 736.

≡ See Appendix A for equivalent part information.

UNCONTROLLED COPY WHEN DOWNLOADED OR PRINTED

Visit www.enstromhelicopter.com for instructions to order an original manual and to register for email notification updates.

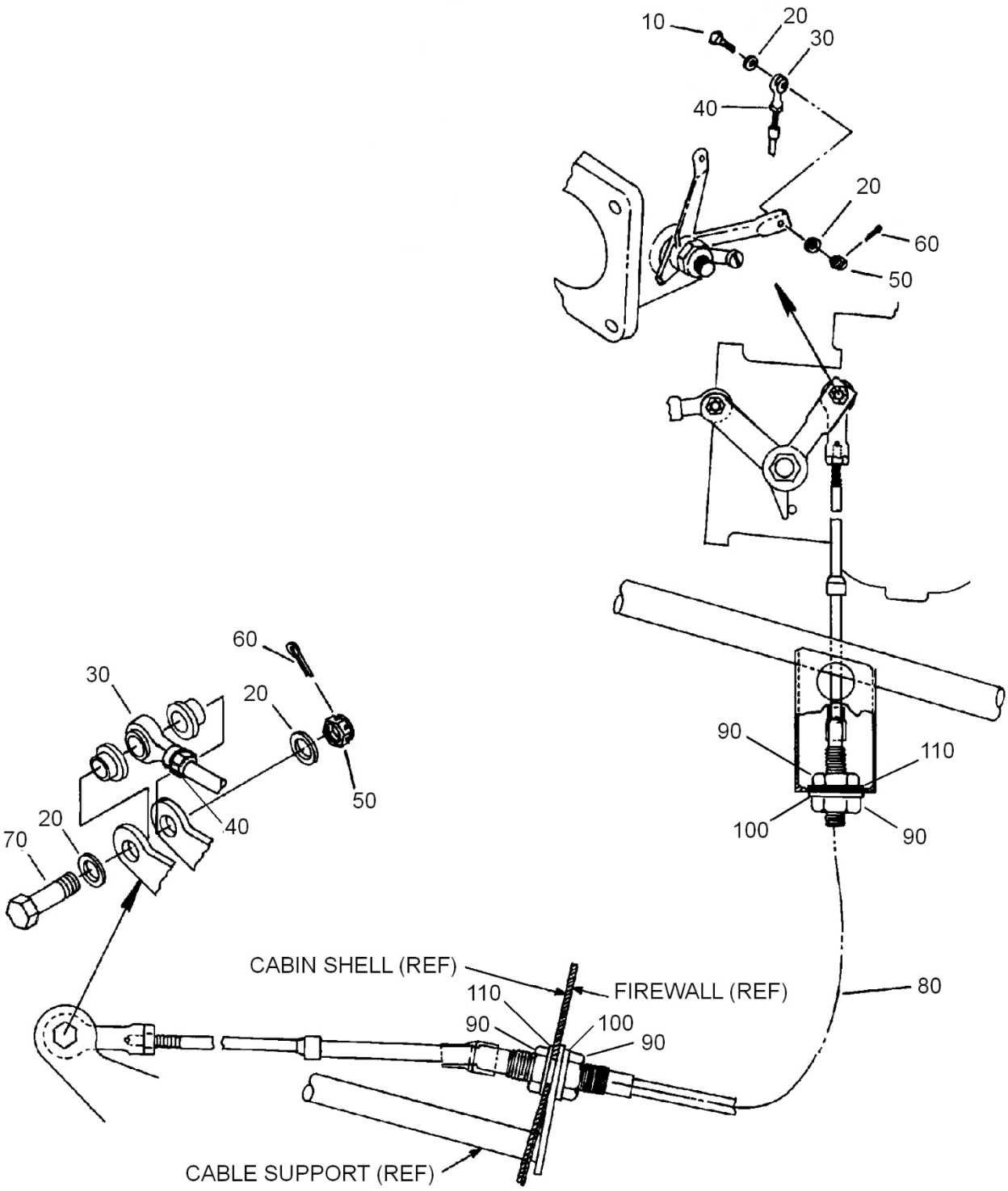

FIGURE 3-14. THROTTLE CABLE INSTALLATION (F MODELS)

UNCONTROLLED COPY WHEN DOWNLOADED OR PRINTED
Visit www.enstromhelicopter.com for instructions to order an original manual and to register for email notification updates.

FIGURE 3-14. THROTTLE CABLE INSTALLATION (F MODELS)

ITEM NUMBER	PART NUMBER	DESCRIPTION	QTY PER ASSY	MODELS AFFECTED						
				F-28A	280	F-28C	280C	F-28F	280F	280FX
10	AN3-7	. Bolt	1					X	X	X
20	NAS1149F0332P	. Washer	4					X	X	X
20	AN960-10L	. Washer (Superseded by NAS1149F0332P)	4					X	X	X
–*	28-164043-11	. Bushing	A/R					X	X	X
30°	MW-3TM-29	. Rod End	2					X	X	X
30≡	HFVV3M	. Rod End (Superseded by MW-3TM-29)	2					X	X	X
40	AN315-3R	. Nut	2					X	X	X
40	AN316-3R	. Nut (Superseded by AN315-3R)	2					X	X	X
50	F12-NE-4753-02	. Nut	2					X	X	X
50	F12-NE-4527-02	. Nut (Superseded by F12-NE-4753-02)	2					X	X	X
60	MS24665-151	. Cotter Pin	2					X	X	X
60	AN381-2-8	. Cotter Pin (Superseded by MS24665-151)	2					X	X	X
70	AN3-13	. Bolt	1					X	X	X
80	65-4527-2229	. Throttle Control Cable	1					X	X	X
80	55-4527-1067	. Throttle Control Cable (Obsolete)	1					X	X	X
90	AN316-8R	. . Nut	4					X	X	X
90	AN316-7R	. . Nut (Superseded by AN316-8R)	4					X	X	X
100	AN936A716	. . Lock Washer	2					X	X	X
110	NAS1149F0732P	. Washer	2					X	X	X
110	AN960-716L	. Washer (Superseded by NAS1149F0732P)	2					X	X	X

* Used with bellcranks having a 0.25 inch diameter hole. (Refer to Figure 3-10, Sheet 3).

≡ See Appendix A for equivalent part information.

° MW-3TM-29 is the preferred part. HFVV3M may be used as an acceptable alternate.

UNCONTROLLED COPY WHEN DOWNLOADED OR PRINTED

Visit www.enstromhelicopter.com for instructions to order an original manual and to register for email notification updates.

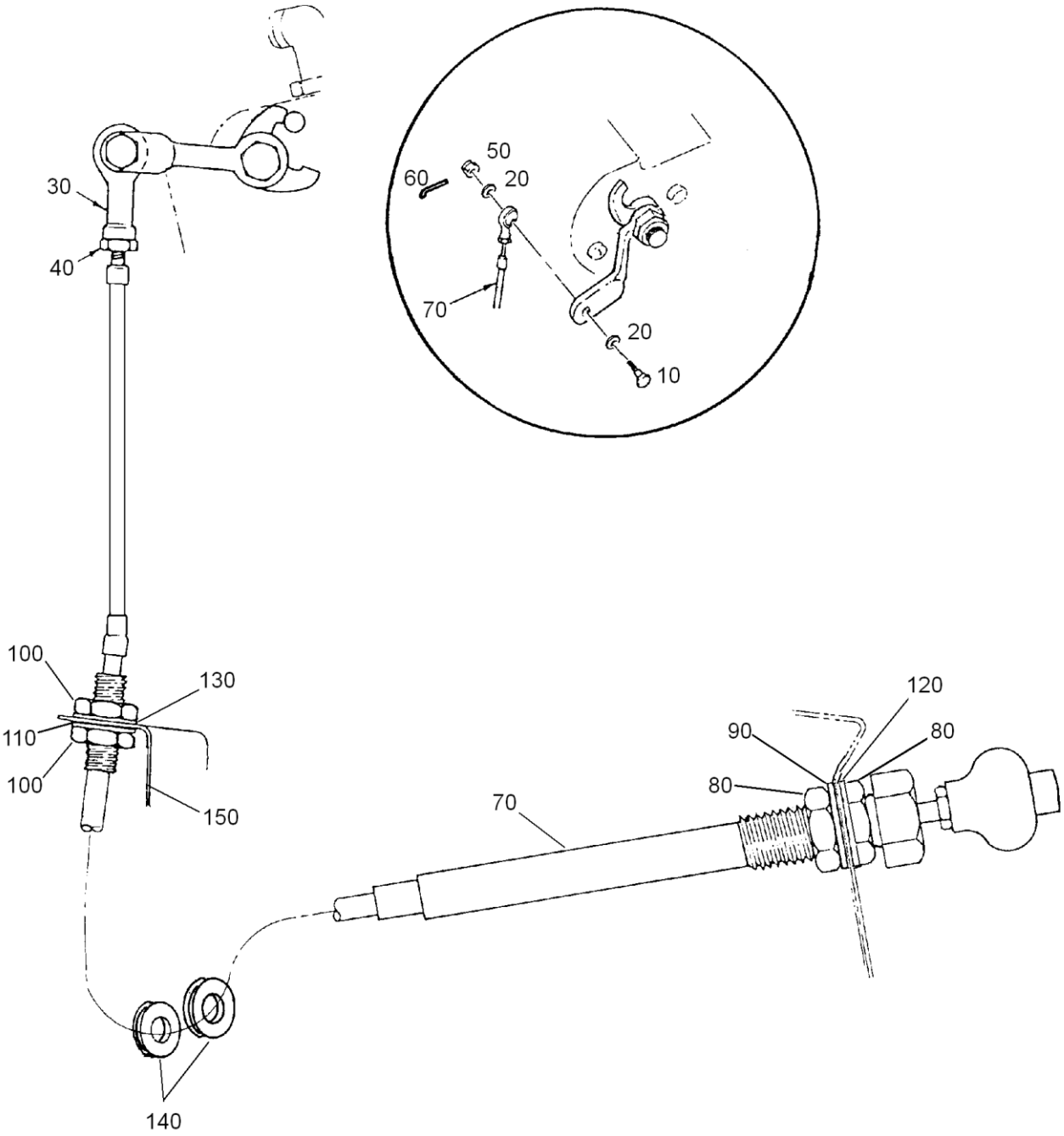

FIGURE 3-15. MIXTURE CABLE INSTALLATION (F MODELS)

UNCONTROLLED COPY WHEN DOWNLOADED OR PRINTED

Visit www.enstromhelicopter.com for instructions to order an original manual and to register for email notification updates.

FIGURE 3-15. MIXTURE CABLE INSTALLATION (F MODELS)

ITEM NUMBER	PART NUMBER	DESCRIPTION	QTY PER ASSY	MODELS AFFECTED						
				F-28A	280	F-28C	280C	F-28F	280F	280FX
10	AN3-7	. Bolt	1					X	X	X
20	NAS1149F0332P	. Washer	2					X	X	X
20	AN960-10L	. Washer (Superseded by NAS1149F0332P)	2					X	X	X
–*	28-164043-11	. Bushing	A/R					X	X	X`
30≡	HFVV3M	. Rod End	1					X	X	X
40	AN315-3R	. Nut	1					X	X	X
40	AN316-3R	. Nut (Superseded by AN315-3R)	1					X	X	X
50	MS17825-3	. Nut	1					X	X	X
50	F12-NE-4753-02	. Nut (Superseded by MS17825-3)	1					X	X	X
60	MS24665-151	. Cotter Pin	1					X	X	X
60	AN381-2-8	. Cotter Pin (Superseded by MS24665-151)	1					X	X	X
70	57-3255-2121	. Mixture Control Cable	1					X	X	X
70**	28-16490-101	. Mixture Control Cable	1					X	X	X
80	AN316-12R	. . Nut	2					X	X	X
90	MS35333-47	. . Lock Washer	1					X	X	X
90	AN936A1216	. . Lock Washer (Superseded by MS35333-47)	1					X	X	X
100	AN316-8R	. . Nut	2					X	X	X
100	AN316-7R	. . Nut (Superseded by AN316-8R)	2					X	X	X
110	AN936A716	. . Lock Washer	1					X	X	X
120	NAS1149F1232P	. Washer	1					X	X	X
120	AN960-1216L	. Washer (Superseded by NAS1149F1232P)	1					X	X	X
130	NAS1149F0732P	. Washer	1					X	X	X
130	AN960-716L	. Washer (Superseded by NAS1149F0732P)	1					X	X	X
140	MS35489-11	. Grommet	2					X	X	X
140	AN931-6-10	. Grommet (Superseded by MS35489-11)	2					X	X	X

UNCONTROLLED COPY WHEN DOWNLOADED OR PRINTED

Visit www.enstromhelicopter.com for instructions to order an original manual and to register for email notification updates.

FIGURE 3-15. MIXTURE CABLE INSTALLATION (F MODELS)

ITEM NUMBER	PART NUMBER	DESCRIPTION	QTY PER ASSY	MODELS AFFECTED						
				F-28A	280	F-28C	280C	F-28F	280F	280FX
150	28-111004-1	. Bracket, Mixture Control	1			X	X			
150†	28-111004-17	. Mixture Control Bracket	1					X		X
150‡	28-111004-15	. Mixture Bracket (Superseded by 28-111004-17)	1					X	X	X

* Used with bellcranks with 0.25 inch diameter hole. (Refer to Figure 3-10, Sheet 3).

** Required for aircraft certified in the United Kingdom.

≡ See Appendix A for equivalent part information.

‡ Mixture bracket is welded to the pylon for “F” models.

† Effectivity F-28F S/N 832 – subsequent and 280FX S/N 2143 – subsequent. Retrofittable to F-28F S/N 509 – subsequent and 280FX S/N 2001 – subsequent.

UNCONTROLLED COPY WHEN DOWNLOADED OR PRINTED

Visit www.enstromhelicopter.com for instructions to order an original manual and to register for email notification updates.

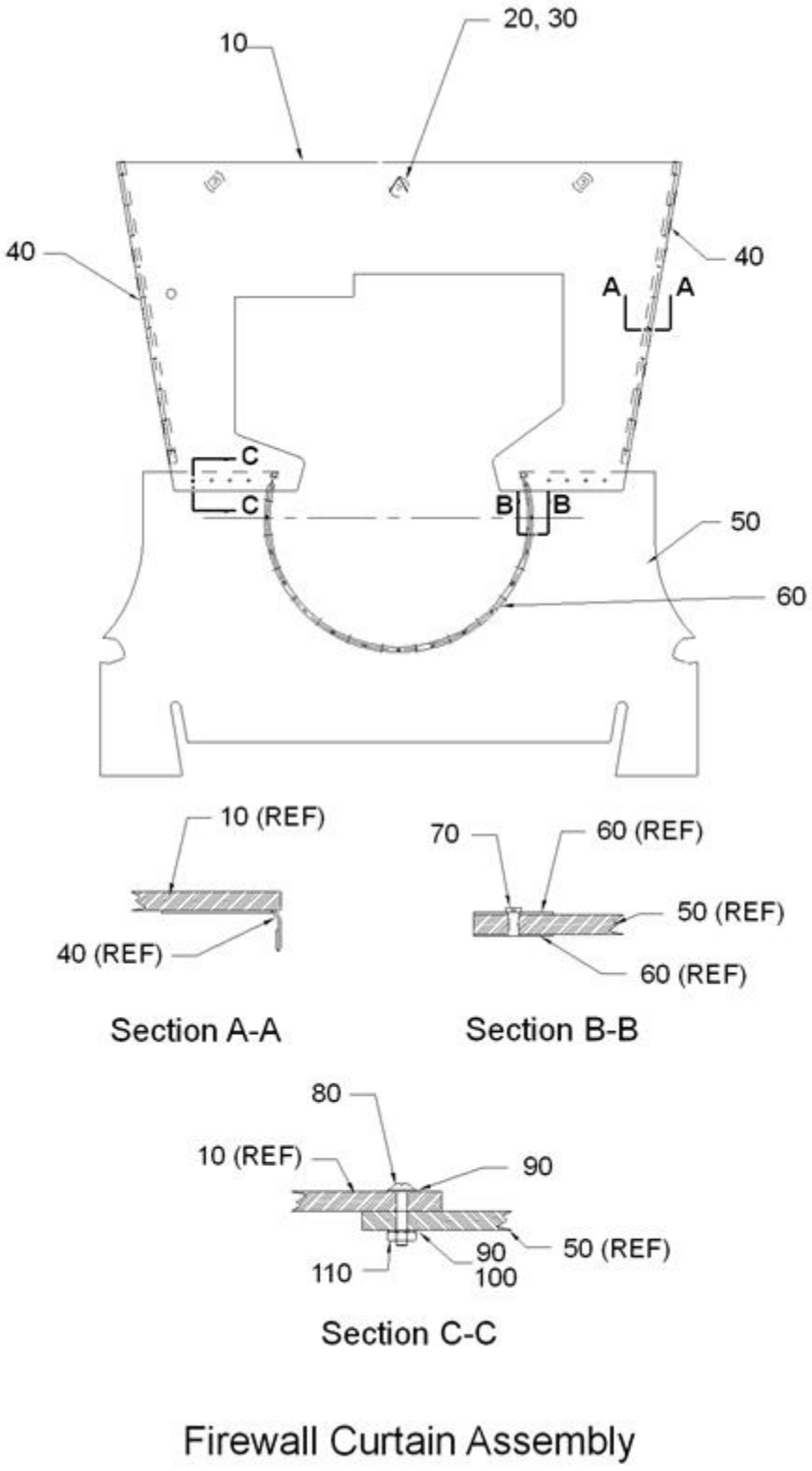

FIGURE 3-16. FIRE CURTAIN ASSEMBLY (ALL MODELS)

UNCONTROLLED COPY WHEN DOWNLOADED OR PRINTED

Visit www.enstromhelicopter.com for instructions to order an original manual and to register for email notification updates.

FIGURE 3-16. FIRE CURTAIN ASSEMBLY (ALL MODELS)

ITEM NUMBER	PART NUMBER	DESCRIPTION	QTY PER ASSY	MODELS AFFECTED						
				F-28A	280	F-28C	280C	F-28F	280F	280FX
–	28-11501-3	Firewall Curtain Assembly	REF	X	X	X	X	X	X	X
–	28-11501-1	Firewall Curtain Assembly (Superseded by 28-11501-3)	REF	X	X	X	X	X	X	X
10	28-11501-17	. Curtain Firewall Top	1	X	X	X	X	X	X	X
10	28-11501-15	. Curtain Firewall Top (Superseded by 28-11501-17)	1	X	X	X	X	X	X	X
10	28-11501-12	. Curtain Firewall Top (Superseded by 28-11501-15)	1	X	X	X	X	X	X	X
–	G-89	. . Fabric: Fire Curtain, 0.057” Thick (In square yards)	2.0	X	X	X	X	X	X	X
20	28-11501-10	. Patch Support	1	X	X	X	X	X	X	X
–	G-89	. . Fabric: Fire Curtain, 0.057” Thick (In Square Yards)	0.004	X	X	X	X	X	X	X
30	732-RTV	. Sealant: Rubber, Clear Silicone	A/R	X	X	X	X	X	X	X
40	28-11501-4	. Strip Mount	2	X	X	X	X	X	X	X
50	28-11501-901	. Curtain Firewall Aft	1	X	X	X	X	X	X	X
–	G-89	. . Fabric: Fire Curtain, 0.057” Thick (In Square Yards)	2.0	X	X	X	X	X	X	X
60	28-11502-5	. . Ring, Retaining, Firewall	2	X	X	X	X	X	X	X
70	MS20426AD3-4	. . Rivet: Solid, 3/32" X 1/4"	16	X	X	X	X	X	X	X
80	AN526-6R6	. Screw	8	X	X	X	X	X	X	X
90	NAS1149FN616P	. Washer	8	X	X	X	X	X	X	X
90*	AN960-6L	. Washer (Superseded by NAS1149FN616P)	16	X	X	X	X	X	X	X
100	MS35338-41	. Lock Washer (Used on 28-11501-1)	8	X	X	X	X	X	X	X
100	AN935-6	. Lock Washer (Superseded by MS35338-41) (Used on 28-11501-1)	8	X	X	X	X	X	X	X
110	AN340-6	. Nut	8	X	X	X	X	X	X	X

* Quantity is 8 when configured with P/N 28-11501-1.

NOTE: The quantities listed for the attaching hardware may vary depending on aircraft model.

UNCONTROLLED COPY WHEN DOWNLOADED OR PRINTED

Visit www.enstromhelicopter.com for instructions to order an original manual and to register for email notification updates.

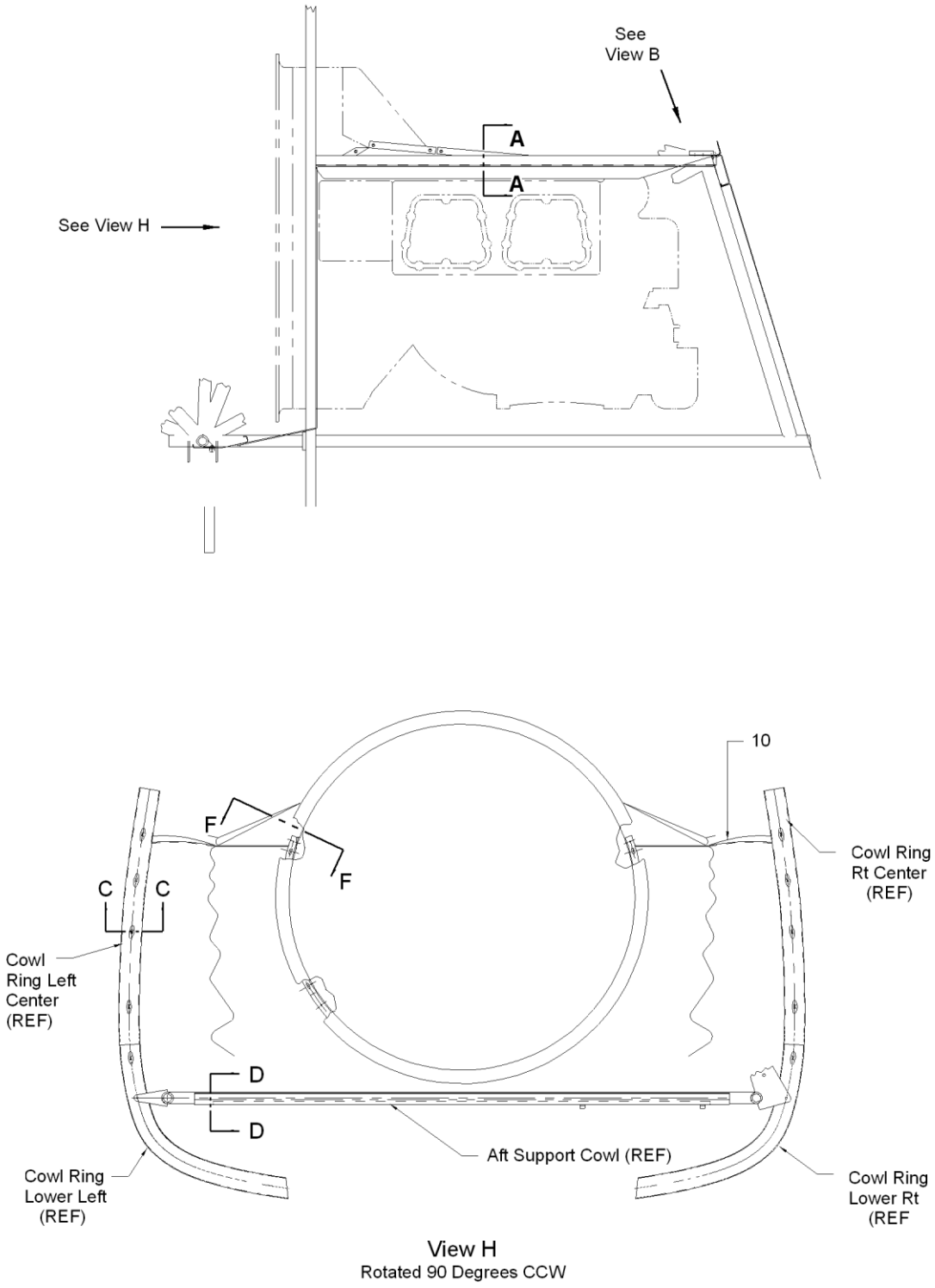

FIGURE 3-17. FIRE CURTAIN INSTALLATION (ALL MODELS)

UNCONTROLLED COPY WHEN DOWNLOADED OR PRINTED

Visit www.enstromhelicopter.com for instructions to order an original manual and to register for email notification updates.

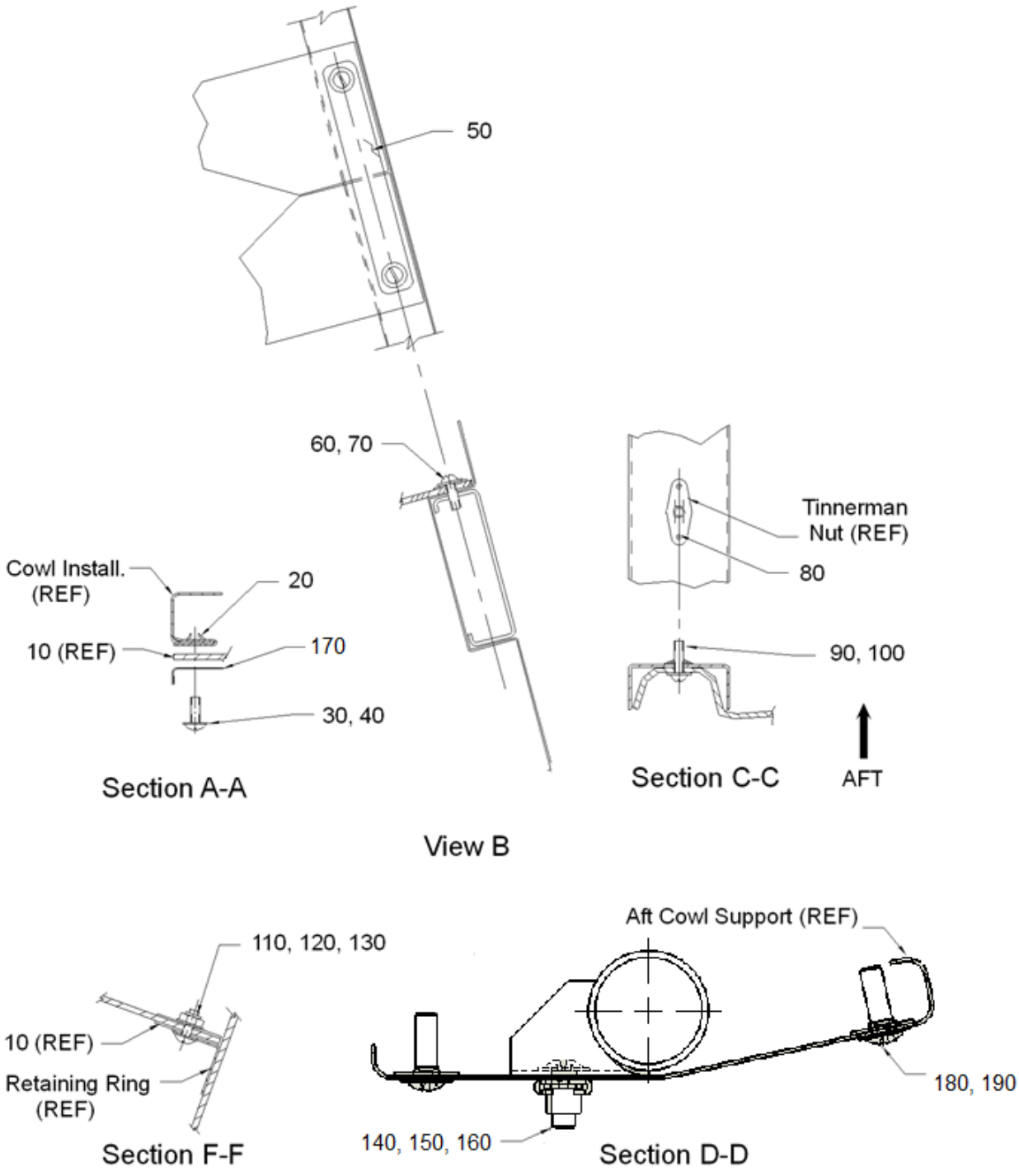

FIGURE 3-17. FIRE CURTAIN INSTALLATION (ALL MODELS)

UNCONTROLLED COPY WHEN DOWNLOADED OR PRINTED

Visit www.enstromhelicopter.com for instructions to order an original manual and to register for email notification updates.

FIGURE 3-17. FIRE CURTAIN INSTALLATION (ALL MODELS)

ITEM NUMBER	PART NUMBER	DESCRIPTION	QTY PER ASSY	MODELS AFFECTED						
				F-28A	280	F-28C	280C	F-28F	280F	280FX
–	28-11500-1	Engine Firewall Installation	REF	X	X	X	X	X	X	X
10	28-11501-3	. Fire Curtain Assembly	1	X	X	X	X	X	X	X
20	A01784-6Z-1D	. Nut, Tinnerman	20	X	X	X	X	X	X	X
20	A1784-6Z-1	. Nut, Tinnerman (Superseded by A01784-6Z-1D)	22	X	X	X	X	X	X	X
30	MS51861-24	. Screw	20	X	X	X	X	X	X	X
30	AN530-6R6	. Screw (Superseded by MS51861-24)	22	X	X	X	X	X	X	X
40	NAS1149FN616P	. Washer	20	X	X	X	X	X	X	X
40	AN960-6L	. Washer (Superseded by NAS1149FN616P)	22	X	X	X	X	X	X	X
50	28-11500-5	. Strap Firewall	1	X	X	X	X	X	X	X
60	MS51861-24	. Screw	10	X	X	X	X	X	X	X
60	AN530-6R6	. Screw (Superseded by MS51861-24)	2	X	X	X	X	X	X	X
70	NAS1149FN616P	. Lock Washer	2	X	X	X	X	X	X	X
70	AN936-A6	. Lock Washer (Superseded by NAS1149FN616P)	2	X	X	X	X	X	X	X
80	MS20426AD3-3	. Rivet	10	X	X	X	X	X	X	X
90	8X1/2	. Screw	10	X	X	X	X	X	X	X
100	NAS1149FN616P	. Washer	10	X	X	X	X	X	X	X
100	AN960-6L	. Washer (Superseded by NAS1149FN616P)	10	X	X	X	X	X	X	X
110	AN515-6R7	. Screw, Machine (RH), 6-32 X 0.438"	15	X	X	X	X	X	X	X
120	NAS1149FN616P	. Washer	30	X	X	X	X	X	X	X
120	AN960-6L	. Washer (Superseded by NAS1149FN616P)	15	X	X	X	X	X	X	X
130	MS21044N06	. Nut Hex, Self Locking	15	X	X	X	X	X	X	X
130	AN365-632A	. Nut Hex, Self Locking (Superseded by MS21044N06)	15	X	X	X	X	X	X	X
140	MS35206-244	. Screw, Machine	3	X	X	X	X	X	X	X

UNCONTROLLED COPY WHEN DOWNLOADED OR PRINTED

Visit www.enstromhelicopter.com for instructions to order an original manual and to register for email notification updates.

FIGURE 3-17. FIRE CURTAIN INSTALLATION (ALL MODELS)

ITEM NUMBER	PART NUMBER	DESCRIPTION	QTY PER ASSY	MODELS AFFECTED						
				F-28A	280	F-28C	280C	F-28F	280F	280FX
140	AN515-8R7	. Screw, Machine (Superseded by MS35206-244)	3	X	X	X	X	X	X	X
150	NAS1149FN816P	. Washer: Flat	3	X	X	X	X	X	X	X
150	AN960-8L	. Washer: Flat (Superseded by NAS1149FN816P)	3	X	X	X	X	X	X	X
160	AN530-8R8	. Screw: Tapping (RH), 8-18 X 0.500”	3	X	X	X	X	X	X	X
170	28-11501-4	. Mount Strip	2	X	X	X	X	X	X	X
180	AN530-8R8	. Screw	9	X	X	X	X	X	X	X
190	NAS1149FN816P	. Washer	9	X	X	X	X	X	X	X

NOTE: The quantities listed for the attaching hardware may vary depending on aircraft model.

UNCONTROLLED COPY WHEN DOWNLOADED OR PRINTED

Visit www.enstromhelicopter.com for instructions to order an original manual and to register for email notification updates.

REFER TO FIGURE 3-19 FOR THE ATTACHING HARDWARE
AND COMMON PARTS FOR THE FAN SHROUD INSTALLATION.

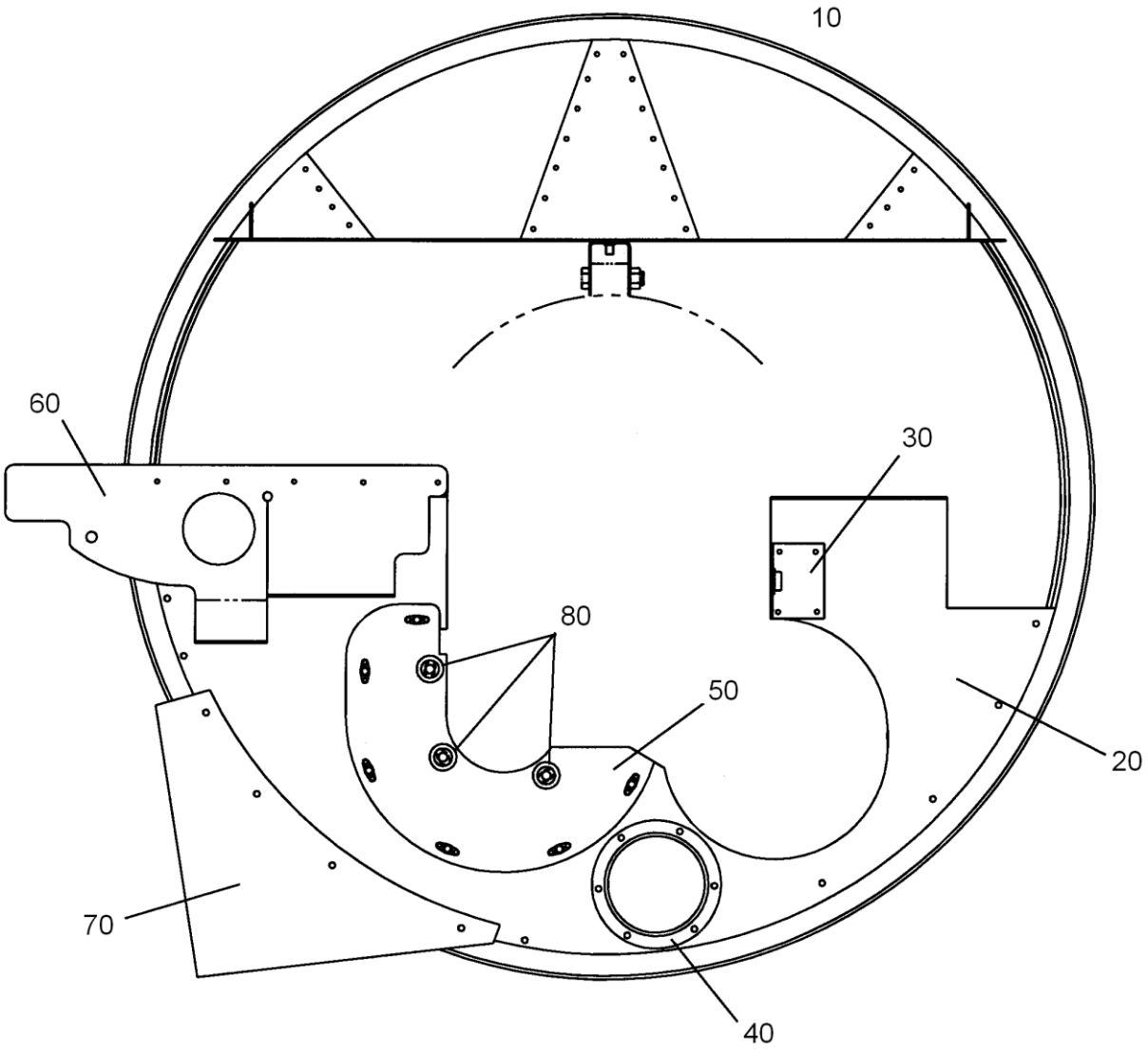

VIEW LOOKING AFT

Sheet 1 of 2

FIGURE 3-18. ENGINE FAN SHROUD ASSEMBLY (A MODELS)

UNCONTROLLED COPY WHEN DOWNLOADED OR PRINTED

Visit www.enstromhelicopter.com for instructions to order an original manual and to register for email notification updates.

REFER TO FIGURE 3-19 FOR THE ATTACHING HARDWARE AND COMMON PARTS FOR THE FAN SHROUD INSTALLATION.

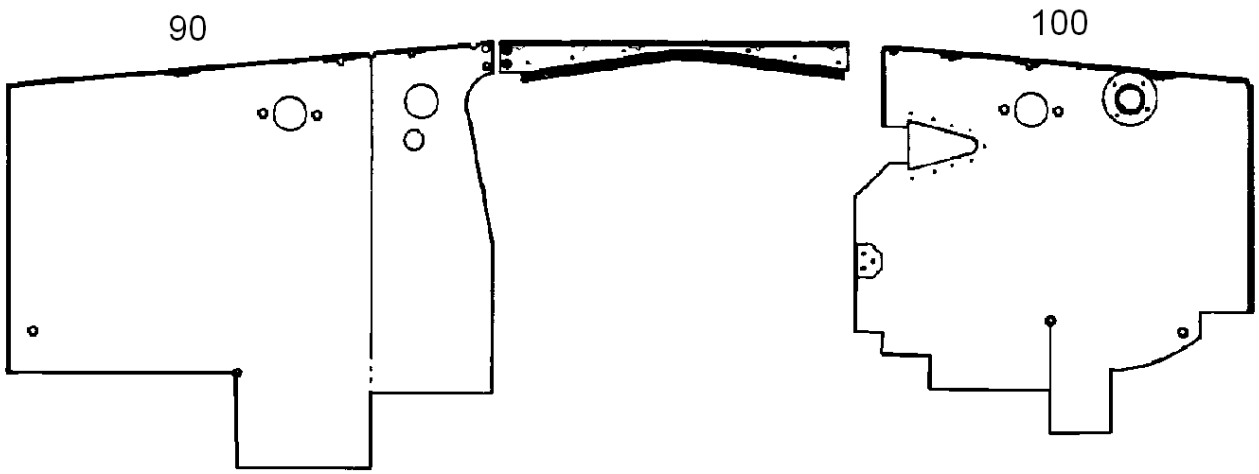

VIEW LOOKING AFT

Sheet 2 of 2

FIGURE 3-18. ENGINE FAN SHROUD ASSEMBLY (A MODELS)

UNCONTROLLED COPY WHEN DOWNLOADED OR PRINTED

Visit www.enstromhelicopter.com for instructions to order an original manual and to register for email notification updates.

FIGURE 3-18. ENGINE FAN SHROUD ASSEMBLY (A MODELS)

ITEM NUMBER	PART NUMBER	DESCRIPTION	QTY PER ASSY	MODELS AFFECTED						
				F-28A	280	F-28C	280C	F-28F	280F	280FX
10	28-12613-1	. Fan Shroud Assembly (Obsolete)	1	X	X					
20	28-12611-1	. . Fan Shroud Baffle Assembly (Obsolete)	1	X	X					
30	28-12611-5	. . . Anchor Bracket	1	X	X					
40	28-12305-1	. . . Stub (Obsolete)	1	X	X					
50	28-12611-8	. . . Doubler (Obsolete)	1	X	X					
–	NAS1023D08K	. . . Nut Plate	6	X	X					
–	NAJ1-82BC	. . . Nut Plate (Superseded by NAS1023D08K)	6	X	X					
–	MS20426AD3-4	. . . Rivet	12	X	X					
60	28-12611-4	. . . Baffle (Obsolete)	1	X	X					
70	28-12612-1	. . Oil Cooler Duct Assembly (Obsolete)	1	X	X					
–	NAS1023D08K	. . . Nut Plate	7	X	X					
–	NAJ1-82BC	. . . Nut Plate (Superseded by NAS1023D08K)	7	X	X					
–	MS20426AD3-4	. . . Rivet	14	X	X					
80	28-12600-4	. Spacer (Starter)	3	X	X					
90	28-12609-3	. Baffle Assembly, R/H	1	X	X					
–	MS20426AD3-4	. . Rivet: Solid, 3/32" X 0.250"	2	X	X					
–	MS20470AD3-4	. . Rivet, Solid, 3/32" X 0.250"	4	X	X					
–	MS21069-06	. . Nut Plate	1	X	X					
–	MS21071-06	. . Nut Plate	1	X	X					
–	NAS1097AD3-3	. . Rivet	4	X	X					
–	280-127505-17	. . Stub Heat Duct	1	X	X					
–	82-35-302-15	. . Receptacle, Spring, Leaf #82	1	X	X					
90	28-12609-1	. Baffle Assembly, R/H (Superseded by 28-12609-3)	1	X	X					
–	82-35-302-15	. . Receptacle	1	X	X					
–	MS21071-06	. . Nut Plate	1	X	X					

UNCONTROLLED COPY WHEN DOWNLOADED OR PRINTED

Visit www.enstromhelicopter.com for instructions to order an original manual and to register for email notification updates.

FIGURE 3-18. ENGINE FAN SHROUD ASSEMBLY (A MODELS)

ITEM NUMBER	PART NUMBER	DESCRIPTION	QTY PER ASSY	MODELS AFFECTED						
				F-28A	280	F-28C	280C	F-28F	280F	280FX
–	12LHTA17-M62	. . Nut Plate (Superseded by MS21071-06)	1	X	X					
–	12LHTA1-M62	. . Nut Plate	1	X	X					
–	MS20426AD3-4	. . Rivet	6	X	X					
100	28-12608-1	. Plate Baffle Assembly	1	X	X					
–	28-12608-3	. . Plate Baffle	1	X	X					
–	28-12608-4	. . Tab Support	1	X	X					
–	28-12621-1	. . Bracket Cover	1	X	X					
–	82-35-302-15	. . Receptacle, Spring, Leaf #82	1	X	X					

NOTE: Refer to Figure 3-20 for the attaching hardware and common parts for the fan shroud.

UNCONTROLLED COPY WHEN DOWNLOADED OR PRINTED

Visit www.enstromhelicopter.com for instructions to order an original manual and to register for email notification updates.

REFER TO FIGURE 3-19 FOR THE ATTACHING HARDWARE
AND COMMON PARTS FOR THE FAN SHROUD INSTALLATION

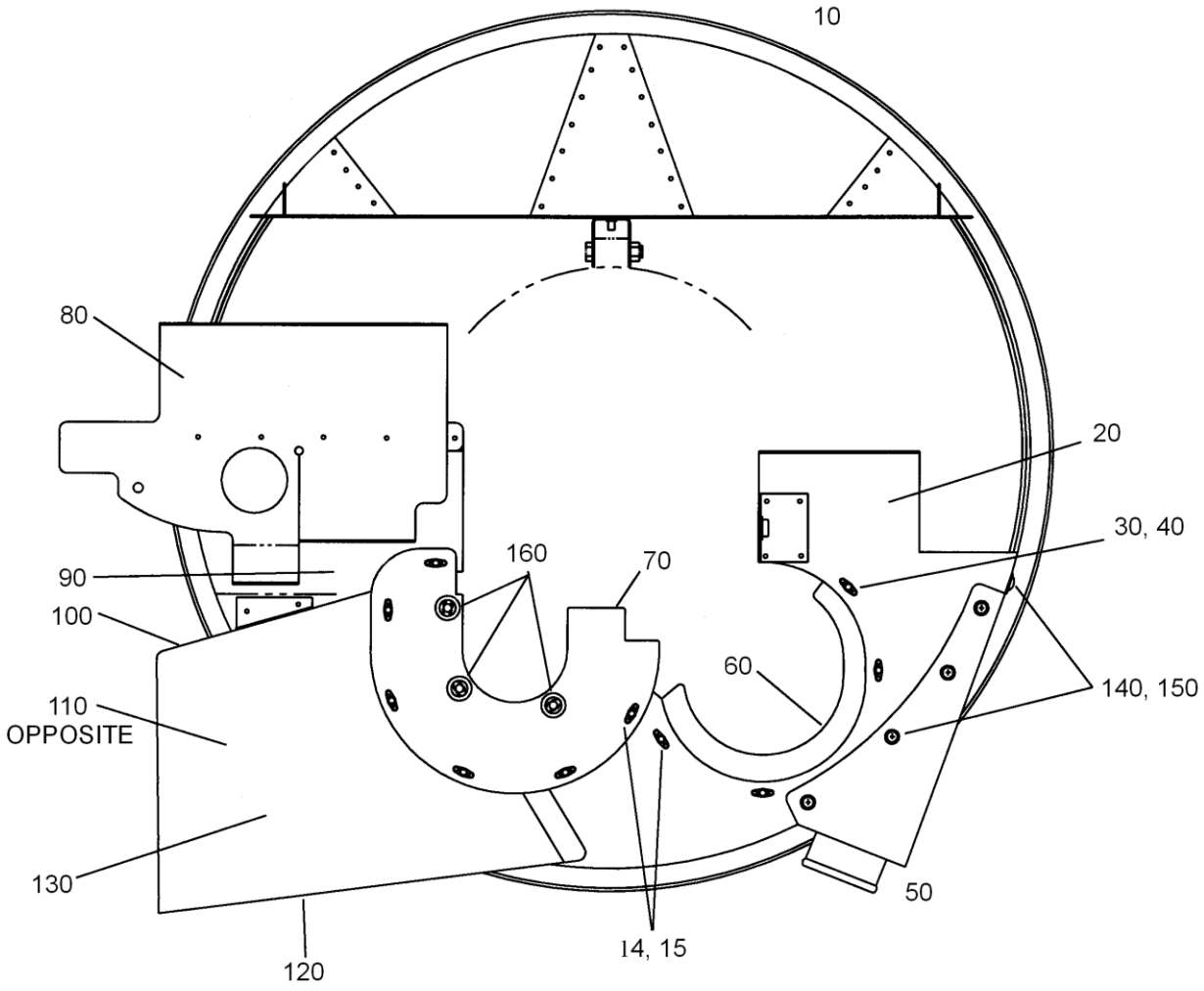

VIEW LOOKING AFT

FIGURE 3-19. ENGINE FAN SHROUD ASSEMBLY (C MODELS)

UNCONTROLLED COPY WHEN DOWNLOADED OR PRINTED
Visit www.enstromhelicopter.com for instructions to order an original manual and to register for email notification updates.

FIGURE 3-19. ENGINE FAN SHROUD ASSEMBLY (C MODELS)

ITEM NUMBER	PART NUMBER	DESCRIPTION	QTY PER ASSY	MODELS AFFECTED						
				F-28A	280	F-28C	280C	F-28F	280F	280FX
10	28-126004-1	. Fan Shroud Assembly	1			X	X			
20	28-126006-1	. . Fan Shroud Baffle Assembly	1			X	X			
–	AN426A3-3	. . . Rivet, Solid, 3/32" X 3/16"	8			X	X			
–	MS21078-08	. . . Nut Plate, 2-Lug, 8-32	3			X	X			
–	MS21080-08	. . . Nut Plate 1-Lug 8-32	1			X	X			
–	28-126004-11	. . . Bracket Lower	1			X	X			
–	28-12611-5	. . . Bracket Anchor	1			X	X			
30	MS21078-08K	. . . Nut Plate	8			X	X			
30	NAJ1-82BC	. . . Nut Plate (Superseded by MS21078-08K)	8			X	X			
40	MS20426AD3-4	. . . Rivet	16			X	X			
50	28-126005-1	. . Duct Assembly	1			X	X			
–	MS20426A3-4	. . . Rivet, Solid, 3/32" X 1/4"	12			X	X			
–	MS20470A3-4	. . . Rivet, Solid, 3/32" X 0.250"	6			X	X			
–	MS21078-08	. . . Nut Plate, 2-Lug, 8-32	3			X	X			
–	MS21080-08K	. . . Nut Plate: 1-Lug, 8-32 Countersunk	3			X	X			
–	MS35206-244	. . . Screw, Machine (RH), 8-32 X 0.438"	6			X	X			
60	28-12649-1	. . Alternator Shroud Assembly (Obsolete)	1			X	X			
70	28-12648-1	. . Starter Shroud Assembly (Obsolete)	1			X	X			
80	280-126001-51	. . Vane Assembly	1			X	X			
90	280-126001-33	. . Fan Shroud Baffle Assembly (Obsolete)	1			X	X			
100	280-126001-41	. . Upper Wall, Oil Cooler Duct (Obsolete)	1			X	X			
110	280-126001-35	. . Forward Wall, Oil Cooler Duct (Obsolete)	1			X	X			
120	280-126001-39	. . Lower Wall, Oil Cooler Duct (Obsolete)	1			X	X			

UNCONTROLLED COPY WHEN DOWNLOADED OR PRINTED

Visit www.enstromhelicopter.com for instructions to order an original manual and to register for email notification updates.

FIGURE 3-19. ENGINE FAN SHROUD ASSEMBLY (C MODELS)

ITEM NUMBER	PART NUMBER	DESCRIPTION	QTY PER ASSY	MODELS AFFECTED						
				F-28A	280	F-28C	280C	F-28F	280F	280FX
130	280-126001-37	. . Aft Wall, Oil Cooler Duct (Obsolete)	1			X	X			
–	MS21078-08K	. . Nut Plate	2			X	X			
–	NAJ17-82BC	. . Nut Plate (Superseded by MS21078-08K)	2			X	X			
–	MS20426AD3-4	. . Rivet	4			X	X			
140	MS35206-245	. . Screw	16			X	X			
140	AN515-8R8	. . Screw (Superseded by MS35206-245)	16			X	X			
150	AN960-8L	. . Washer	16			X	X			
160	28-12600-4	. Spacer (Starter)	3			X	X			

NOTE: Refer to Figure 3-20 for the attaching hardware and common parts for the fan shroud installation.

UNCONTROLLED COPY WHEN DOWNLOADED OR PRINTED

Visit www.enstromhelicopter.com for instructions to order an original manual and to register for email notification updates.

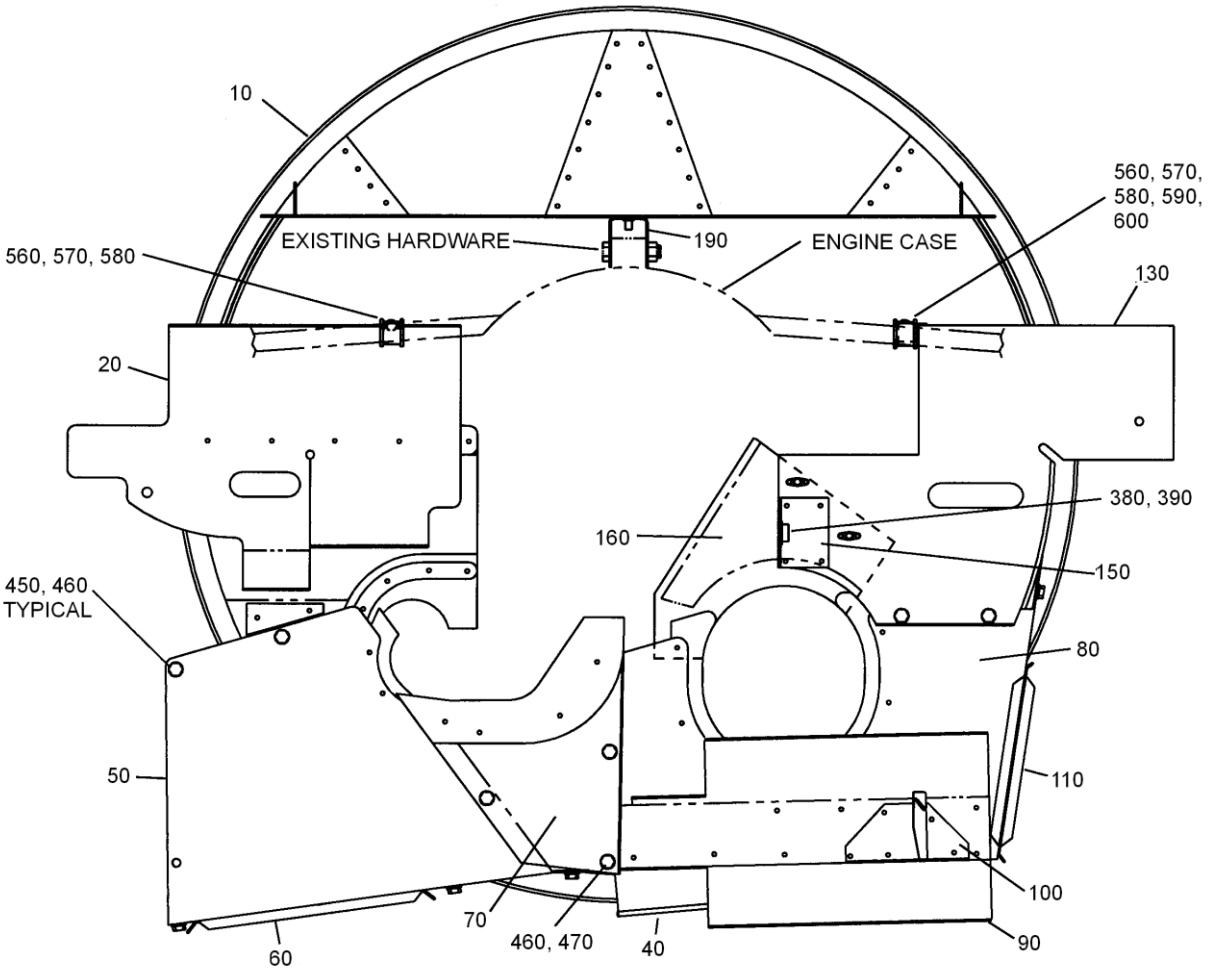

VIEW LOOKING AFT

Sheet 1 of 4

FIGURE 3-20/A/B. ENGINE FAN SHROUD ASSEMBLY (C, F MODELS)

UNCONTROLLED COPY WHEN DOWNLOADED OR PRINTED

Visit www.enstromhelicopter.com for instructions to order an original manual and to register for email notification updates.

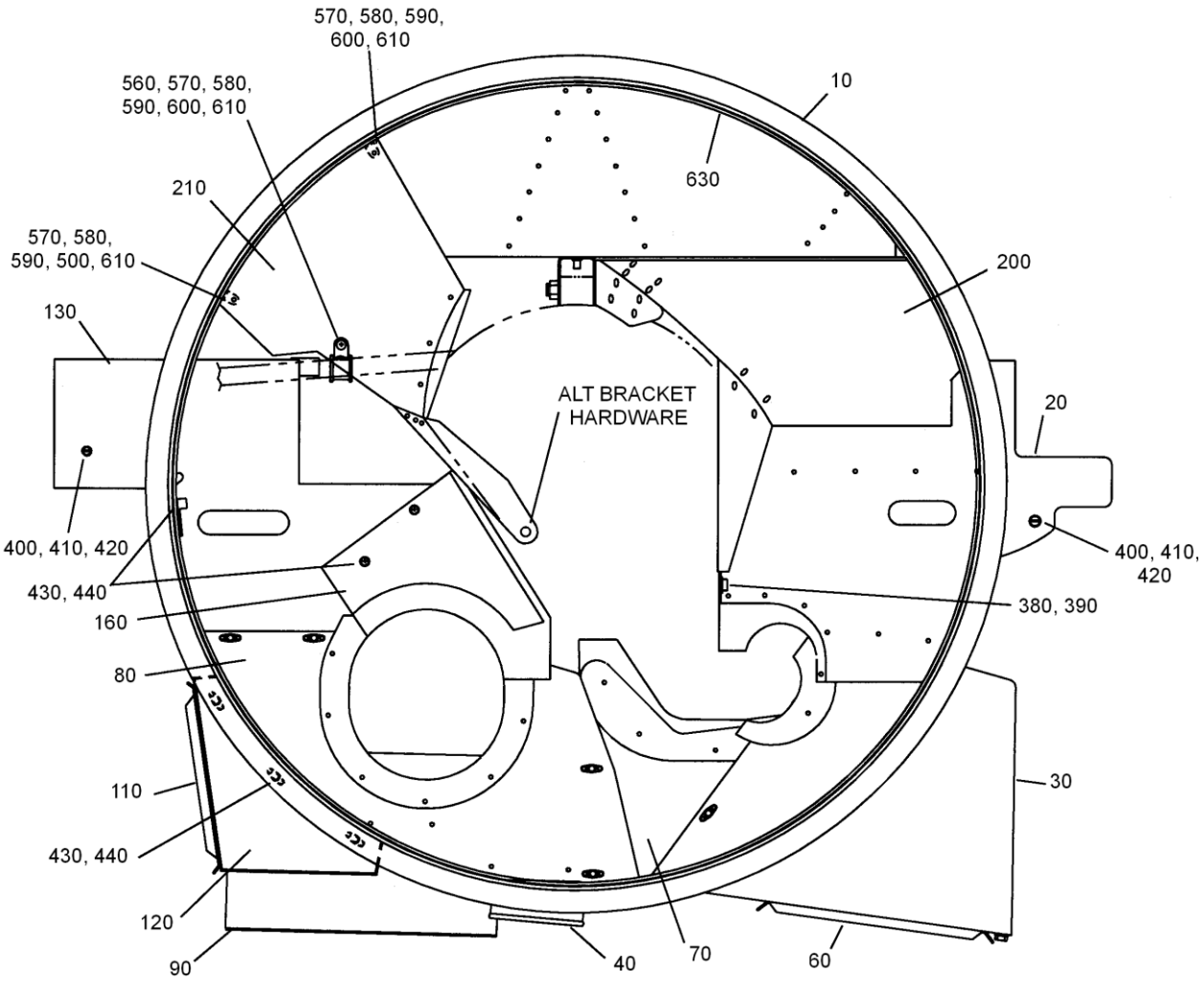

VIEW LOOKING FORWARD

Sheet 2 of 4

FIGURE 3-20/A/B. ENGINE FAN SHROUD ASSEMBLY (C, F MODELS)

UNCONTROLLED COPY WHEN DOWNLOADED OR PRINTED

Visit www.enstromhelicopter.com for instructions to order an original manual and to register for email notification updates.

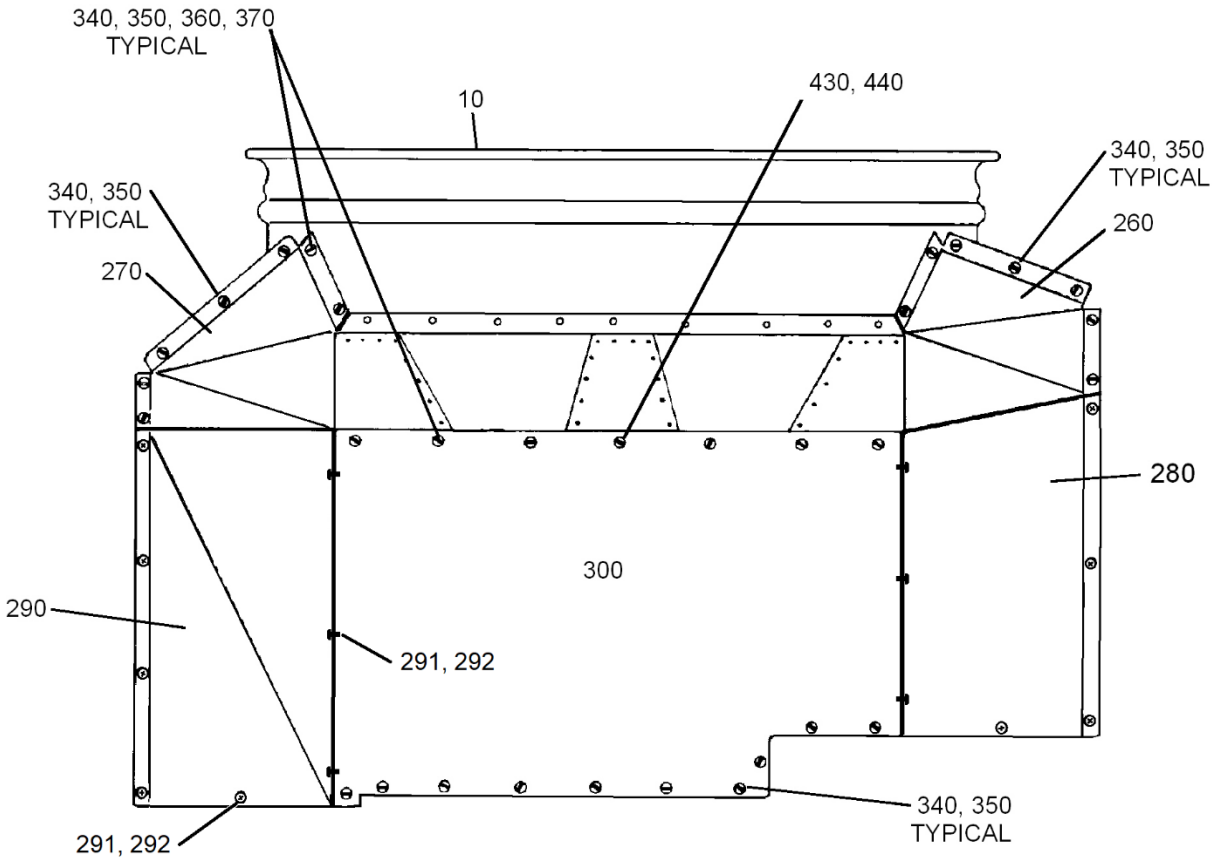

VIEW LOOKING DOWN

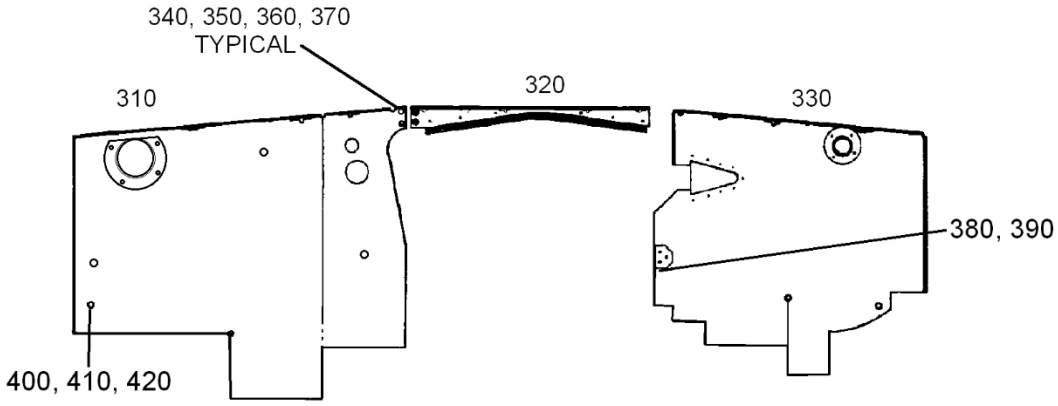

VIEW LOOKING AFT

Sheet 3 of 4

FIGURE 3-20/A/B. ENGINE FAN SHROUD ASSEMBLY (C, F MODELS)

UNCONTROLLED COPY WHEN DOWNLOADED OR PRINTED

Visit www.enstromhelicopter.com for instructions to order an original manual and to register for email notification updates.

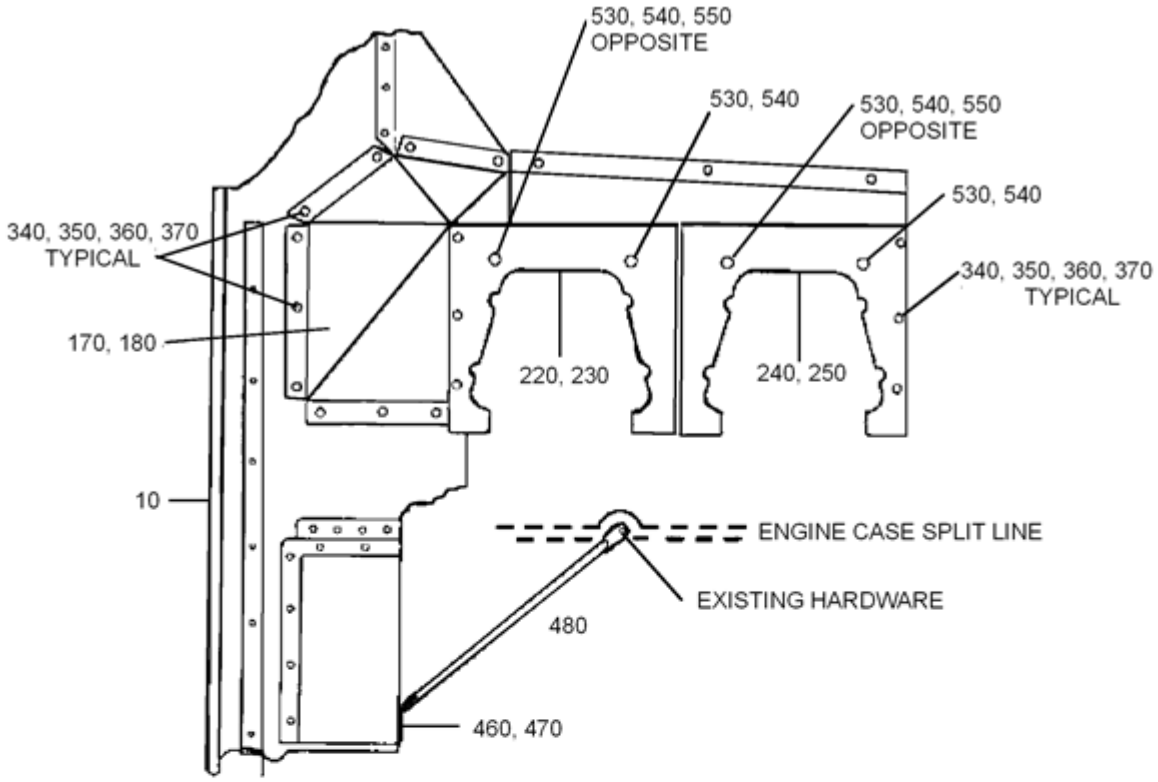

VIEW LOOKING FROM RIGHT SIDE

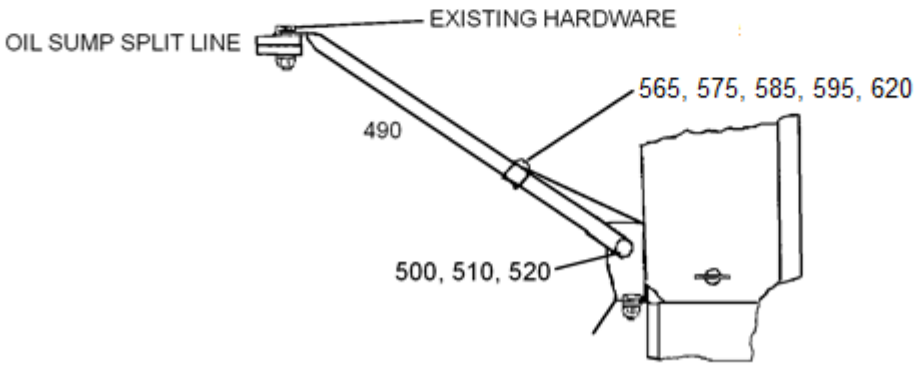

VIEW LOOKING FROM LEFT SIDE

Sheet 4 of 4

FIGURE 3-20/A/B. ENGINE FAN SHROUD ASSEMBLY (C, F MODELS)

UNCONTROLLED COPY WHEN DOWNLOADED OR PRINTED

Visit www.enstromhelicopter.com for instructions to order an original manual and to register for email notification updates.

FIGURE 3-20 ENGINE FAN SHROUD ASSEMBLY
F-28F S/N 826 and 280FX S/N 2135 and Subsequent

ITEM NUMBER	PART NUMBER	DESCRIPTION	QTY PER ASSY	MODELS AFFECTED						
				F-28A	280	F-28C	280C	F-28F	280F	280FX
–	28-12676-901	. Fan Shroud Assembly	1					X		X
10	28-12610-3	. . Shroud: Fan, Engine Cooling	1					X		X
–	28-12610-3A	. . . Shroud: Fan, Engine Cooling	1					X		X
20	280-126001-908	. . Vane Assembly	1					X		X
–	MS20426A3-4	. . . Rivet: Solid, 3/32" X 1/4"	5					X		X
–	MS20470A3-4	. . . Rivet: Solid, 3/32" X 0.250"	2					X		X
–	NAS1149FN316P	. . . Washer: Flat, #3 (0.016") Light	1					X		X
–	280-126001-34	. . . Baffle Fan Shroud	1					X		X
–	280-126001-51	. . . Vane	1					X		X
–	NAS1068A08	. . . Nut Plate, 2-Lug, 8-32 Floating	1					X		X
–	MS20426AD3-3	. . . Rivet: Solid, 3/32" X 3/16"	2					X		X
30	28-12656-3	. . Duct Assembly Oil Cooler	1					X		X
–	MS21078-3	. . . Nut Plate, 2-Lug, 10-32	7					X		X
–	MS21080-3	. . . Nut Plate	2					X		X
–	MS20426AD3-4	. . . Rivet: Solid, 3/32" X 1/4"	18					X		X
▌ –**	28-12652-5	. . . Aft Wall Baffle Duct Assembly	1					X		X
–	28-12652-13	. . . Aft Wall Baffle Duct Assembly	1					X		X
▌ –**	28-12653-5	. . . Baffle Oil Cooling Duct	1					X		X
–	28-12653-13	. . . Baffle Oil Cooling Duct	1					X		X
40	28-12149-1	. . Stub, Fan Shroud	1					X		X
–	MS20426AD3-4	. . . Rivet: Solid: 3/32" X 1/4"	4					X		X
50	28-12655-5	. . Forward Duct Oil Cooler Wall	1					X		X
–	MS21078-3	. . . Nut Plate, 2-Lug, 10-32	3					X		X
–	MS20426AD3-4	. . . Rivet: Solid 3/32" X 1/4"	6					X		X
–	MS20426A3-4	. . . Rivet: Solid 3/32" X 1/4"	4					X		X
–	28-12650-1	. . . Forward Wall Fan Shroud Assembly	1					X		X
–	28-12651-13	. . . Surface Lower Oil Cooler Duct	1					X		X
60	28-12662-1	. . . Cover Oil Cooler Duct	1					X		X

UNCONTROLLED COPY WHEN DOWNLOADED OR PRINTED

Visit www.enstromhelicopter.com for instructions to order an original manual and to register for email notification updates.

FIGURE 3-20. ENGINE FAN SHROUD ASSEMBLY
F-28F S/N 826 and 280FX S/N 2135 and Subsequent

ITEM NUMBER	PART NUMBER	DESCRIPTION	QTY PER ASSY	MODELS AFFECTED						
				F-28A	280	F-28C	280C	F-28F	280F	280FX
–	AJW4-30	. . . Stud, Wing-Head, 0.200" X 0.30	2					X		X
–	GA4-250	. . . Retainer, Stud, 5/16"	2					X		X
70	28-12688-5	. . Starter Shroud Assembly	1					X		X
–	MS20470A3-4	. . . Rivet: Solid, 3/32" X 0.250"	4					X		X
–	NAS1149FN316P	. . . Washer: Flat, #3 (0.016") Light	4					X		X
–	28-12688-29	. . . Curtain Air Seal Starter	1					X		X
–	G-89	. . . . Fabric: Fire Curtain, 0.057" Thick (In Square Yards)	0.003					X		X
80	28-12681-5	. . Duct Assembly Oil Cooler Lower	1					X		X
–	MS20426AD3-3	. . . Rivet, Solid, 3/32" X 3/16"	2					X		X
–	MS20470AD3-4	. . . Rivet, Solid, 3/32" X 0.250"	12					X		X
–	MS20426AD3-4	. . . Rivet, Solid, 3/32" X 0.250"	15					X		X
–	NAS1097AD3-4	. . . Rivet, Solid, 3/32" X 1/4"	1					X		X
–	MS21078-3	. . . Nut Plate, 2-Lug, 10-32	5					X		X
–	MS21080-3	. . . Nut Plate	2					X		X
–	NAS686A08K	. . . Nut Plate	1					X		X
–	1219-4200-Z3Y	. . . . Spring	2					X		X
–	28-12667-11	. . . Doubler Oil Cooler Duct	1					X		X
–	28-12668-11	. . . Curtain Baffle Oil Cooler Duct	1					X		X
–	G-89	. . . . Fabric: Fire Curtain, 0.057" Thick (In square yards)	0.04					X		X
90	28-12682-11	. . . Deflector Left Side Lower Fan Shroud	1					X		X
100	28-12683-1	. . . Bracket Assembly Fan Shroud	1					X		X
–	28-12683-11	. . . . Bracket Fan Shroud	1					X		X
–	28-12683-13	. . . . Bracket Shroud Lower Left Fan	1					X		X
110	28-12666-3	. . Cover Fan Shroud Duct	1					X		X
–	AJW4-30	. . . Stud, Wing-Head, 0.200" X 0.30"	2					X		X
120	28-12687-1	. . Baffle Oil Cooler Duct	1					X		X

UNCONTROLLED COPY WHEN DOWNLOADED OR PRINTED

Visit www.enstromhelicopter.com for instructions to order an original manual and to register for email notification updates.

FIGURE 3-20 ENGINE FAN SHROUD ASSEMBLY
F-28F S/N 826 and 280FX S/N 2135 and Subsequent

ITEM NUMBER	PART NUMBER	DESCRIPTION	QTY PER ASSY	MODELS AFFECTED						
				F-28A	280	F-28C	280C	F-28F	280F	280FX
–	NAS686A3K	. . . Nut Plate	5					X		X
–	MS20426AD3-4	. . . Rivet: Solid, 3/32" X 1/4"	16					X		X
130	28-12659-1	. . Left Side Baffle Assembly	1					X		X
–	28-12659-15	. . Left Side Baffle	1					X		X
–	MS21061L08K	. . . Nut Plate	1					X		X
–	NAS686A08K	. . . Nut Plate	1					X		X
–	MS20426AD3-3	. . . Rivet: Solid, 3/32" X 0.188"	4					X		X
–	28-12659-17	. . . Clip Baffle	1					X		X
–	MS20470AD3-3	. . . . Rivet	2					X		X
150	28-12611-5	. . Bracket Anchor	1					X		X
160	28-12689-11	. . Fire Curtain Alternator (793/2078 and Subsequent).	1					X		X
–	G-89	. . . Fabric: Fire Curtain, 3/64" Thick (In square yards)	0.04					X		X
170	28-12610-12	. . Baffle Fan Shroud LH	1					X		X
180	28-12610-13	. . Baffle Fan Shroud RH	1					X		X
190	28-12620-1	. Bracket Shroud Fan Up Support	1					X		X
–	MS21069-08	. . Plate Nut	1					X		X
–	MS20426AD3-4	. . Rivet, Solid, 3/32" X 3/16"	2					X		X
200	28-12647-3	. Vane & Splitter Assembly	1					X		X
–	MS20470AD4-4	. . Rivet: Solid, 1/8" X 0.250" Alum	12					X		X
–	28-12646-21	. . Upper Splitter	1					X		X
–	28-12646-13	. . Lower Splitter	1					X		X
–	28-12646-15	. . Clip Splitter	2					X		X
–	28-12646-17	. . Clip Splitter	2					X		X
–	280-126001-109	. . Vane Assembly	1					X		X
–	MS20426AD3-3	. . . Rivet, Solid, 3/32" X 3/16"	6					X		X
–	NAS686A08K	. . . Nut Plate	3					X		X
210	280-126001-9	. Vane Assembly	1					X		X
–	MS20470AD4-4	. . Rivet: Solid,1/8" X 0.250" Alum	5					X		X
–	MS20470AD4-5	. . Rivet, Solid, 1/8" X 0.312" Alum	1					X		X

UNCONTROLLED COPY WHEN DOWNLOADED OR PRINTED

Visit www.enstromhelicopter.com for instructions to order an original manual and to register for email notification updates.

FIGURE 3-20 ENGINE FAN SHROUD ASSEMBLY
F-28F S/N 826 and 280FX S/N 2135 and Subsequent

ITEM NUMBER	PART NUMBER	DESCRIPTION	QTY PER ASSY	MODELS AFFECTED						
				F-28A	280	F-28C	280C	F-28F	280F	280FX
–	280-126001-15	. . Vane	1					X		X
–	280-126001-53	. . Clip Vane	1					X		X
–	280-126001-55	. . Clip Vane	1					X		X
220◄	28-126007-7	. Baffle Plate Assembly #1 Cylinder	1					X		X
220	28-126007-5	. Baffle, L/H Aft (Superseded by 28-126007-7)	1					X		X
–	82-35-302-15	. . Receptacle, Spring, Leaf #82	1					X		X
–	MS21069-06K	. . Nut Plate	2					X		X
–	MS20426A3-3.5	. . Rivet	4					X		X
–	NAS1097AD3-4	. . Rivet	2					X		X
230◄	28-12607-101	. Baffle Plate Assembly #2 Cylinder	1					X		X
230	28-12607-8	. Plate Baffle Assembly (Superseded by 28-12607-101)	1					X		X
–	82-35-302-15	. . Receptacle, Spring, Leaf #82	2					X		X
–	MS21069-06K	. . Nut Plate	2					X		X
–	MS20426AD3-3.5	. . Rivet	4					X		X
–	NAS1097AD3-4	. . Rivet	4					X		X
240◄	28-126007-17	. Baffle Plate #3 Cylinder	1					X		X
240	28-126007-3	. Plate Baffle (Superseded by 28-126007-17)	1					X		X
–	82-35-302-15	. . Receptacle, Spring, Leaf #82	2					X		X
–	NAS1097AD3-4	. . Rivet	4					X		X
250◄	28-12607-13	. Baffle Plate #4 Cylinder	1					X		X
250	28-12607-6	. Plate Baffle Assembly (Superseded by 28-12607-13)	1					X		X
–	82-35-302-15	. . Receptacle, Spring, Leaf #82	2					X		X
–	NAS1097AD3-4	. . Rivet	4					X		X
260	28-12613-5	. Baffle Fan Shroud	1					X		X
270	28-12613-4	. Baffle Fan Shroud	1					X		X

UNCONTROLLED COPY WHEN DOWNLOADED OR PRINTED

Visit www.enstromhelicopter.com for instructions to order an original manual and to register for email notification updates.

FIGURE 3-20 ENGINE FAN SHROUD ASSEMBLY
F-28F S/N 826 and 280FX S/N 2135 and Subsequent

ITEM NUMBER	PART NUMBER	DESCRIPTION	QTY PER ASSY	MODELS AFFECTED						
				F-28A	280	F-28C	280C	F-28F	280F	280FX
280◄	28-12629-11	. Baffle Plate	1					X		X
280	28-12616-1	. Plate Baffle Assembly (Superseded by 28-12629-11)	1					X		X
–	82-19-120-16	. . Fastener Stud Recess	3					X		X
–	82-19-140–16	. . Stud, Oval-Head, 0.198" (0.285)	4					X		X
–	43-13-1-24	. . Ejector Spring	7					X		X
–	82-32-101-20	. . Retainer, Ring, Split #82 Stud	7					X		X
290◄	28-12628-11	. Baffle Plate	1					X		X
290	28-12614-1	. Baffle Plate Assembly (Superseded by 28-12628-11)	1					X		X
–	82-19-120-16	. . Fastener Stud Recess	3					X		X
–	82-19-140–16	. . Stud, Oval-Head, 0.198" (0.285)	5					X		X
–	43-13-1-24	. . Spring Ejector	8					X		X
–	82-32-101-20	. . Retainer, Ring, Split #82 Stud	8					X		X
291	8X5/8	. . Screw (Used with 28-12629-11 and 28-12628-11)	15					X		X
291	MS51861-36	. . Screw (Used with 28-12629-11 and 28-12628-11) (Alternate)	15					X		X
292≡	A01789-8Z-1D	. . Nutplate	15					X		X
300	28-12615-1	. Plate Baffle Assembly	1					X		X
–	82-35-302-15	. . Receptacle, Spring, Leaf #82	6					X		X
–	MS20426A3-4	. . Rivet, Solid, 3/32" X 1/4"	12					X		X
310	28-12609-3	. Baffle Plate	1					X		X
–	82-35-302-15	. . Receptacle, Spring, Leaf #82	1					X		X
–	MS21071-06	. . Nut Plate	1					X		X
–	MS21069-06	. . Nut Plate	1					X		X
–	NAS1097AD3-4	. . Rivet	2					X		X
–	280-127505-17	. . Stub Heat Duct	1					X		X
–	MS20470AD3-4	. . Rivet, Solid, 3/32" X 0.250"	4					X		X
–	NAS1097AD3-3	. . Rivet	4					X		X
320	28-12617-1	. Plate Baffle Assembly	1					X		X

UNCONTROLLED COPY WHEN DOWNLOADED OR PRINTED

Visit www.enstromhelicopter.com for instructions to order an original manual and to register for email notification updates.

FIGURE 3-20 ENGINE FAN SHROUD ASSEMBLY
F-28F S/N 826 and 280FX S/N 2135 and Subsequent

ITEM NUMBER	PART NUMBER	DESCRIPTION	QTY PER ASSY	MODELS AFFECTED						
				F-28A	280	F-28C	280C	F-28F	280F	280FX
–	G-89	. . Fabric: Fire Curtain, 0.057" Thick (In square yards)	0.002					X		X
–	MS20470A3-3	. . Rivet, Solid, 3/32" X 0.188"	6					X		X
–	NAS1149FN316P	. . Washer: Flat, #3 (0.016") Light	6					X		X
–	AN960-3	. . Washer (Superseded by NAS 1149FN316P)	6					X		X
–	MS21069-06	. . Nut Plate	5					X		X
–	MS20426AD3-3	. . Rivet, Solid, 3/32" X 3/16"	10					X		X
330	28-126008-1	. Plate Baffle Assembly	1					X		X
–	82-35-302-15	. . Receptacle, Spring, Leaf #82	1					X		X
–	MS21069-06	. . Nut Plate	3					X		X
–	NAS1097AD3-3	. . Rivet	2					X		X
–	NAS1097AD3-4	. . Rivet: Solid, 3/32" X 1/4"	10					X		X
–	28-12608-4	. . Tab Support	1					X		X
–	28-12621-1	. . Bracket Cover	1					X		X
–	28-181008-	. . Ducting Stub	1					X		X
340	AN515-6-6	. Screw, Machine (RH), 6-32 X 0.375"	A/R					X		X
350	NAS1149FN632P	. Washer, Flat #6 Bolt Size	A/R					X		X
350	AN960-6	. Washer (Superseded by NAS1149FN632P)	A/R					X		X
360	MS35338-41	. Washer, Lock, #6 (0.031")	A/R					X		X
360	AN935-6	. Lock Washer (Superseded by MS35338-41)	A/R					X		X
370	MS35649-262	. Nut, Hex, 6-32 Light	A/R					X		X
370	AN340-632	. Nut (Superseded by MS35649-262)	A/R					X		X
380	NP500-456-7	. Screw, 1/4-20 X 7/16”	3					X		X
380	NK500-416-7	. Screw (Superseded by NP500-456-7)	3					X		X
390	NAS1149F0432P	. Washer: Flat, 1/4" (0.032) Light	3					X		X

UNCONTROLLED COPY WHEN DOWNLOADED OR PRINTED

Visit www.enstromhelicopter.com for instructions to order an original manual and to register for email notification updates.

FIGURE 3-20 ENGINE FAN SHROUD ASSEMBLY
F-28F S/N 826 and 280FX S/N 2135 and Subsequent

ITEM NUMBER	PART NUMBER	DESCRIPTION	QTY PER ASSY	MODELS AFFECTED						
				F-28A	280	F-28C	280C	F-28F	280F	280FX
390	AN960-416L	. Washer (Superseded by NAS1149F0432P)	3					X		X
400	AN502-10-8	. Screw	3					X		X
410	MS35333-39	. Lock Washer	3					X		X
410	AN936A10	. Lock Washer (Superseded by MS35333-39)	3					X		X
420*	65614	. Plug, Attaching	3					X		X
430	MS35206-244	. Screw, Machine (RH), 8-32 X 0.438"	5					X		X
430	AN515-8R7	. Screw (Superseded by MS35206-244)	5					X		X
440	NAS1149FN816P	. Washer: Flat, #8" (0.016”) Light	5					X		X
440	AN960-8L	. Washer (Superseded by NAS1149FN816P)	5					X		X
450	AN3-3A	. Bolt, Mach, 10-32 X 0.469"	A/R					X		X
460	NAS1149F0432P	. Washer, Flat, #10 (0.032") Light	A/R					X		X
460	AN960-10L	. Washer (Superseded by NAS1149F0332P)	A/R					X		X
470	AN3-4A	. Bolt: Machine, 10-32 X 0.531"	1					X		X
480	28-12619-1	. Strut Assembly	1					X		X
–	28-12619-4	. . Bracket End Lower	1							
–	28-12619-5	. . Plate, End, Fan Shroud Strut	1							
490	28-12686-11	. Strut	1					X		X
500	AN3-5A	. Bolt, Mach, 10-32 X 0.656"	1					X		X
510	NAS1149F0363P	. Washer, Flat, #10 (0.063")	2					X		X
510	AN960-10	. Washer (Superseded by NAS1149F0363P)	2					X		X
520	MS21044N3	. Nut, Self-Locking	1					X		X
520	AN365-1032A	. Nut (Superseded by MS21044N3)	1					X		X
530	AN503-416-10	. Screw, Machine (Flh), 1/4-20 X 0.625”	6					X		X
530	AN503-416-28	. Screw, Machine (Flh), 1/4-20 X 1.750”	2					X		X

UNCONTROLLED COPY WHEN DOWNLOADED OR PRINTED

Visit www.enstromhelicopter.com for instructions to order an original manual and to register for email notification updates.

FIGURE 3-20 ENGINE FAN SHROUD ASSEMBLY
F-28F S/N 826 and 280FX S/N 2135 and Subsequent

ITEM NUMBER	PART NUMBER	DESCRIPTION	QTY PER ASSY	MODELS AFFECTED						
				F-28A	280	F-28C	280C	F-28F	280F	280FX
530	AN503-416-10	. Screw, Machine (Flh), 1/4-20 X 0.625" (No Auxiliary Cooler)	8							
540	NAS1149F0432P	. Washer: Flat, 1/4" (0.032") Light	8					X		X
540	AN960-416L	. Washer (Superseded by NAS1149F0432P)	8					X		X
550	NAS43HT4-64	. Spacer	2					X		X
560	MS21919WCJ12	. Clamp, Loop, 3/4" Cushioned	3					X		X
565	AN526-1032R8	. Screw	1					X		X
570	MS35206-245	. Screw: Mach (Ph), 8-32 X 0.500"	8					X		X
570	AN515-8R8	. Screw (Superseded by MS35206-245)	8					X		X
575	NAS1149F0332P	. Washer	1					X		X
580	NAS1149FN816P	. Washer: Flat, #8" (0.016) Light	16					X		X
580	AN960-8L	. Washer (Superseded by NAS1149FN816P)	16					X		X
585	AN935-10	. Lock Washer	1					X		X
590	MS35338-42	. Washer: Lock, 0.040" #8 Light	7					X		X
590	AN935-8	. Lock Washer (Superseded by MS35338-42)	7					X		X
595	AN345-10	. Nut	1					X		X
600	MS35649-282	. Nut: Hex, 8-32 Unc-2b Light	7					X		X
600	AN340-8	. Nut (Superseded by MS35649-282)	7					X		X
610	280-126001-69	. Bracket, Clamp, Support	3					X		X
620	AN742-F6	. Clamp	1					X		X
630	4508-2	. Tape: Foam, 2" W (0.125" T) Black	82"					X		X

* Obtain from a Lycoming Distributor.

** Effective: F-28F/280FX S/N 833/2170 and subsequent; Eligibility: F-28F/280FX S/N 826/2135 and subsequent.

◄ Effective: F-28F/280FX S/N S/N 833/2170 and subsequent; Eligibility: F-28F/280FX S/N 826/2135 and subsequent.

≡ See Appendix A for equivalent part number information; See Appendix B for acceptable substitution.

UNCONTROLLED COPY WHEN DOWNLOADED OR PRINTED

Visit www.enstromhelicopter.com for instructions to order an original manual and to register for email notification updates.

FIGURE 3-20 A. ENGINE FAN SHROUD ASSEMBLY
F28F S/N 825 and 280FX S/N 2134 and Previous

ITEM NUMBER	PART NUMBER	DESCRIPTION	QTY PER ASSY	MODELS AFFECTED						
				F-28A	280	F-28C	280C	F-28F	280F	280FX
–●	28-12676-9	. Shroud Assembly - Skytech Starter (Superseded by 28-12676-901)	1					X		X
–	28-12676-7	. Shroud Assembly - B&C or Lycoming Starter (Superseded by 28-12675-9)	1					X		X
10	28-12675-3	. . Fan Shroud Assembly	1					X		X
–	28-12610-3A	. . Shroud Fan Engine Cooling	1					X		X
20	280-126001-908	. . . Vane Assembly	1					X		X
–	NAS1068A08	. . . . Nut Plate	1					X		X
–	MS20426AD3-3	. . . . Rivet	2					X		X
30	28-12656-3	. . . Oil Cooler Duct Assembly	1					X		X
–	MS21078-3	. . . Nut Plate, 2-Lug, 10-32	7					X		X
–	NAJ1-02BC	. . . Nut Plate (Superseded by 21078-3)	7					X		X
–	MS21080-3	. . . Nut Plate	2					X		X
–	NAJ17-02BC	. . . Nut Plate (Superseded by MS21080-3)	2					X		X
–	MS20426AD3-4	. . . Rivet: Solid, 3/32" X 1/4"	18					X		X
–●●	28-12652-5	. . . Aft Wall Baffle Duct Assembly	1					X		X
–	28-12652-13	. . . Aft Wall Baffle Duct Assembly	1					X		X
–●●	28-12652-5	. . . Aft Wall Baffle Duct Assembly	1					X		X
–	28-12653-13	. . . Baffle Oil Cooling Duct	1					X		X
40	28-12149-1	. . . Stub, Fan Shroud	1					X		X
–	MS20426AD3-4	. . . Rivet	4					X		X
50	28-12655-5	. . Oil Cooler Duct Assembly (Used with 28-12676-9)	1					X		X
50	28-12655-3	. . Oil Cooler Duct Assembly (Used with 28-12676-7)	1					X		X
–	MS21078-3	. . . Nut Plate, 2-Lug, 10-32	3					X		X
–	NAJ1-02BC	. . . Nut Plate (Superseded by MS21078-3)	3					X		X
–	MS20426AD3-4	. . . Rivet: Solid, 3/32" X 1/4"	6					X		X
–	MS20426A3-4	. . . Rivet: Solid, 3/32" X 1/4"	4					X		X

UNCONTROLLED COPY WHEN DOWNLOADED OR PRINTED

Visit www.enstromhelicopter.com for instructions to order an original manual and to register for email notification updates.

FIGURE 3-20 A. ENGINE FAN SHROUD ASSEMBLY
F28F S/N 825 and 280FX S/N 2134 and Previous

ITEM NUMBER	PART NUMBER	DESCRIPTION	QTY PER ASSY	MODELS AFFECTED						
				F-28A	280	F-28C	280C	F-28F	280F	280FX
–	28-12651-13	. . . Surface Lower Oil Cooler Duct	1					X		X
60	28-12662-1	. . Cover Oil Cooler Duct Assembly	1					X		X
60	28-12662-13	. . . Cover (Superseded by 28-12662-1)	1					X		X
–	AJW4-30	. . . Wing Fastener	2					X		X
–	GA4-250	. . . Retainer, Stud	2					X		X
70**	28-12688-5	. . Starter Shroud Assembly	1					X		X
–	MS20470A3-4	. . . Rivet, Solid, 3/32" X 0.250"						X		X
–	NAS1149FN316P	. . . Washer: Flat, #3 (0.016") Light						X		X
–	28-12688-29	. . . Curtain Air Seal Starter						X		X
–	G-89	. . . . Fabric: Fire Curtain, 3/64" Thick (In Square Yards)	0.003					X		X
70	28-12688-3	. . Starter Shroud Assembly Lycoming Starters (Superseded by 28-12688-5)	1					X		X
–	NAS1149FN316P	. . . Washer: Flat, #3 (0.016") Light	4					X		X
–	28-12688-25	. . . Curtain Starter Shroud	1					X		X
70	28-12688-1	. . Starter Shroud Assembly (B&C Starters Only)	1					X		X
–	MS20470AD3-4	. . . Rivet, Solid, 3/32" X 0.250"	9					X		X
–	28-12688-13	. . . Strap - Starter Shroud.	1					X		X
–	28-12688-15	. . . Air Seal Starter Shroud	1					X		X
–	28-12688-17	. . . Brace - Starter Shroud	1					X		X
–	28-12688-19	. . . Spacer Starter Shroud	1					X		X
80	28-12681-5	. . Oil Cooler Duct Assembly	1					X		X
90	28-12682-11	. . . Deflector Lt Side Lower Fan Shroud	1					X		X
100	28-12683-1	. . . Bracket Assembly Fan Shroud (Used with 28-12681-1, -5)	1					X		X
–	28-12683-11	. . . Bracket Fan Shroud	1					X		X
–	28-12683-13	. . . Bracket Shroud Lower Left Fan	1					X		X
–	28-12668-11	. . . Curtain Baffle Oil Cooler Duct	1					X		X

UNCONTROLLED COPY WHEN DOWNLOADED OR PRINTED

Visit www.enstromhelicopter.com for instructions to order an original manual and to register for email notification updates.

FIGURE 3-20 A. ENGINE FAN SHROUD ASSEMBLY
F28F S/N 825 and 280FX S/N 2134 and Previous

ITEM NUMBER	PART NUMBER	DESCRIPTION	QTY PER ASSY	MODELS AFFECTED						
				F-28A	280	F-28C	280C	F-28F	280F	280FX
110	28-12666-3	. . Cover Assembly (Used with 28-12681-5)	1					X		X
–	AJW4-30	. . . Wing Fastener	2					X		X
–	GA4-250	. . . Retainer	2					X		X
120	28-12687-1	. . Baffle	1					X		X
–	NAS686A3K	. . . Nut Plate	5					X		X
–	NAJ-02BC	. . . Nut Plate (Superseded by NAS686A3K)	5					X		X
–	NAS1023D08K	. . . Nut Plate, 2-Lug, 8-32 (B/C) Al	3					X		X
–	NAJ1-82BC	. . . Nut Plate (Superseded by NAS1023D08K)	3					X		X
–	MS20426AD3-4	. . . Rivet: Solid, 3/32" X 1/4"	16					X		X
130	28-12659-15	. . Baffle Assembly (Used with 28-12676-7, -9	1					X		X
–	MS21078-08K	. . . Nut Plate, 2-Lug, 8-32	1					X		X
–	NAJ17-82BC	. . . Nut Plate, 1-Lug, 8-32	1					X		X
–	MS20470AD3-3	. . . Rivet: Solid, 3/32" X 0.188"	2					X		X
140	28-12659-17	. . . Clip (Used with 28-12659-15)	1					X		X
140	28-12659-16	. . . Clip (Used with 28-12659-15 and superseded by 28-12659-17)	1					X		X
150	28-12611-5	. . Bracket Anchor (Used with 28-12676-7, -9)	1					X		X
160	28-12689-11	. . Fire Curtain Alternator (Used with 28-12676-7, -9 on S/N 793/2078 and subsequent).	1					X		X
170	28-12610-12	. . Baffle Fan Shroud LH	1					X		X
180	28-12610-13	. . Baffle Fan Shroud RH	1					X		X
190	28-12620-1	. Bracket Shroud Fan Up Support	1					X		X
–	MS21069-08	. . Plate Nut	1					X		X
–	MS20426AD3-4	. . Rivet, Solid, 3/32" X 3/16"	2					X		X
200	28-12647-1	. Vane & Splitter Assembly	1					X		X
–	MS20470AD4-4	. . Rivet: Solid,1/8" X 0.250" Alum	12					X		X

UNCONTROLLED COPY WHEN DOWNLOADED OR PRINTED

Visit www.enstromhelicopter.com for instructions to order an original manual and to register for email notification updates.

FIGURE 3-20 A. ENGINE FAN SHROUD ASSEMBLY
F28F S/N 825 and 280FX S/N 2134 and Previous

ITEM NUMBER	PART NUMBER	DESCRIPTION	QTY PER ASSY	MODELS AFFECTED						
				F-28A	280	F-28C	280C	F-28F	280F	280FX
–	28-12646-11	. . Upper Splitter	1					X		X
–	28-12646-13	. . Lower Splitter	1					X		X
–	28-12646-15	. . Clip Splitter	2					X		X
–	28-12646-17	. . Clip Splitter	2					X		X
–	280-126001-109	. . Vane Assembly	1					X		X
–	MS20426AD3-3	. . . Rivet, Solid, 3/32" X 3/16"	6					X		X
–	NAS686A08K	. . . Nut Plate	3					X		X
210	280-126001-9	. Vane Assembly	1					X		X
–	MS20470AD4-4	. . Rivet: Solid, 1/8" X 0.250" Alum	5					X		X
–	MS20470AD4-5	. . Rivet, Solid, 1/8" X 0.312" Alum	1					X		X
–	280-126001-15	. . Vane	1					X		X
–	280-126001-53	. . Clip Vane	1					X		X
–	280-126001-55	. . Clip Vane	1					X		X
220••	28-126007-7	. Baffle Plate Assembly #1 Cylinder	1					X		X
220	28-126007-5	. Baffle, L/H Aft (Superseded by 28-126007-7)	1					X		X
–	82-35-302-15	. . Receptacle, Spring, Leaf #82	1					X		X
–	MS21069-06K	. . Nut Plate	2					X		X
–	MS20426A3-3.5	. . Rivet	4					X		X
–	NAS1097AD3-4	. . Rivet	2					X		X
230••	28-12607-101	. Baffle Plate Assembly #3 Cylinder	1					X		X
230	28-12607-8	. Plate Baffle Assembly (Superseded by 28-126007-17)	1					X		X
–	82-35-302-15	. . Receptacle, Spring, Leaf #82	2					X		X
–	MS21069-06K	. . Nut Plate	2					X		X
–	MS20426AD3-3.5	. . Rivet	4					X		X
–	NAS1097AD3-4	. . Rivet	4					X		X
240••	28-126007-17	. Baffle Plate #3 Cylinder	1					X		X
240	28-126007-3	. Plate Baffle (Superseded by 28-126007-17)	1					X		X
–	82-35-302-15	. . Receptacle, Spring, Leaf #82	2					X		X

UNCONTROLLED COPY WHEN DOWNLOADED OR PRINTED

Visit www.enstromhelicopter.com for instructions to order an original manual and to register for email notification updates.

FIGURE 3-20 A ENGINE FAN SHROUD ASSEMBLY
F28F S/N 825 and 280FX S/N 2134 and Previous

ITEM NUMBER	PART NUMBER	DESCRIPTION	QTY PER ASSY	MODELS AFFECTED						
				F-28A	280	F-28C	280C	F-28F	280F	280FX
–	NAS1097AD3-4	. . Rivet	4					X		X
250••	28-12607-13	. Baffle Plate #4 Cylinder	1					X		X
250	28-12607-6	. Plate Baffle Assembly (Superseded by 28-12607-13)	1					X		X
–	82-35-302-15	. . Receptacle, Spring, Leaf #82	2					X		X
–	NAS1097AD3-4	. . Rivet	4					X		X
260	28-12613-5	. Baffle Fan Shroud	1					X		X
270	28-12613-4	. Baffle Fan Shroud	1					X		X
280••	28-12629-11	. Baffle Plate	1					X		X
280	28-12616-1	. Plate Baffle Assembly (Superseded by 28-1629-11)	1					X		X
–	82-19-120-16	. . Fastener Stud Recess	3					X		X
–	82-19-140–16	. . Stud, Oval-Head, 0.198" (0.285)	4					X		X
–	43-13-1-24	. . Ejector Spring	7					X		X
–	82-32-101-20	. . Retainer, Ring, Split #82 Stud	7					X		X
290••	28-12628-11	. Baffle Plate	1					X		X
290	28-12614-1	. Baffle Plate Assembly (Superseded by 28-16628-11)	1					X		X
–	82-19-120-16	. . Fastener Stud Recess	3					X		X
–	82-19-140–16	. . Stud, Oval-Head, 0.198" (0.285)	5					X		X
–	43-13-1-24	. . Spring Ejector	8					X		X
–	82-32-101-20	. . Retainer, Ring, Split #82 Stud	8					X		X
291••	8X5/8	. . Screw (Used with 280A and 290A)	15					X		X
291••	MS51861-36	. . Screw (Used with 280A and 290A) (Alternate)	15					X		X
292••≡	A01789-8Z-1D	. . Nutplate	15					X		X
300	28-12615-1	. Plate Baffle Assembly	1					X		X
–	82-35-302-15	. . Receptacle, Spring, Leaf #82	6					X		X
–	MS20426A3-4	. . Rivet, Solid, 3/32" X 1/4"	12					X		X
310	28-12609-3	. Baffle Plate	1					X		X
–	82-35-302-15	. . Receptacle, Spring, Leaf #82	1					X		X

UNCONTROLLED COPY WHEN DOWNLOADED OR PRINTED

Visit www.enstromhelicopter.com for instructions to order an original manual and to register for email notification updates.

FIGURE 3-20 A. ENGINE FAN SHROUD ASSEMBLY
F28F S/N F 825 and 280FX S/N 2134 and Previous

ITEM NUMBER	PART NUMBER	DESCRIPTION	QTY PER ASSY	MODELS AFFECTED						
				F-28A	280	F-28C	280C	F-28F	280F	280FX
–	MS21071-06	. . Nut Plate	1					X		X
–	MS21069-06	. . Nut Plate	1					X		X
–	NAS1097AD3-4	. . Rivet	2					X		X
–	280-127505-17	. . Stub Heat Duct	1					X		X
–	MS20470AD3-4	. . Rivet, Solid, 3/32" X 0.250"	4					X		X
–	NAS1097AD3-3	. . Rivet	4					X		X
320	28-12617-1	. Plate Baffle Assembly	1					X		X
–	G-89	. . Fabric: Fire Curtain, 0.057" Thick (In square yards)	0.002					X		X
–	MS20470A3-3	. . Rivet, Solid, 3/32" X 0.188"	6					X		X
–	NAS1149FN316P	. . Washer: Flat, #3 (0.016") Light	6					X		X
–	AN960-3	. . Washer (Superseded by NAS 1149FN316P)	6					X		X
–	MS21069-06	. . Nut Plate	5					X		X
–	MS20426AD3-3	. . Rivet, Solid, 3/32" X 3/16"	10					X		X
330	28-126008-1	. Plate Baffle Assembly	1					X		X
–	82-35-302-15	. . Receptacle, Spring, Leaf #82	1					X		X
–	MS21069-06	. . Nut Plate	3					X		X
–	NAS1097AD3-3	. . Rivet	2					X		X
–	NAS1097AD3-4	. . Rivet: Solid, 3/32" X 1/4"	10					X		X
–	28-12608-4	. . Tab Support	1					X		X
–	28-12621-1	. . Bracket Cover	1					X		X
–	28-181008-	. . Ducting Stub	1					X		X
340	AN515-6-6	. Screw, Machine (RH), 6-32 X 0.375"	A/R					X		X
350	NAS1149FN632P	. Washer, Flat #6 Bolt Size	A/R					X		X
350	AN960-6	. Washer (Superseded by NAS1149FN632P)	A/R					X		X
360	MS35338-41	. Washer, Lock, #6 (0.031")	A/R					X		X
360	AN935-6	. Lock Washer (Superseded by MS35338-41)	A/R					X		X
370	MS35649-262	. Nut, Hex, 6-32 Light	A/R					X		X

UNCONTROLLED COPY WHEN DOWNLOADED OR PRINTED

Visit www.enstromhelicopter.com for instructions to order an original manual and to register for email notification updates.

FIGURE 3-20 A. ENGINE FAN SHROUD ASSEMBLY
F28F S/N 825 and 280FX S/N 2134 and Previous

ITEM NUMBER	PART NUMBER	DESCRIPTION	QTY PER ASSY	MODELS AFFECTED						
				F-28A	280	F-28C	280C	F-28F	280F	280FX
370	AN340-632	. Nut (Superseded by MS35649-262)	A/R					X		X
380	NP500-456-7	. Screw, 1/4-20 X 7/16”	3					X		X
380	NK500-416-7	. Screw (Superseded by NP500-456-7)	3					X		X
390	NAS1149F0432P	. Washer: Flat, 1/4" (0.032”) Light	3					X		X
390	AN960-416L	. Washer (Superseded by NAS1149F0432P)	3					X		X
400	AN502-10-8	. Screw	3					X		X
410	MS35333-39	. Lock Washer	3					X		X
410	AN936A10	. Lock Washer (Superseded by MS35333-39)	3					X		X
420*	65614	. Plug, Attaching	3					X		X
430	MS35206-244	. Screw, Machine (RH), 8-32 X 0.438"	5					X		X
430	AN515-8R7	. Screw (Superseded by MS35206-244)	5					X		X
440	NAS1149FN816P	. Washer: Flat, #8" (0.016) Light	5					X		X
440	AN960-8L	. Washer (Superseded by NAS1149FN816P)	5					X		X
450	AN3-3A	. Bolt, Mach, 10-32 X 0.469"	A/R					X		X
460	NAS1149F0432P	. Washer, Flat, #10 (0.032") Light	A/R					X		X
460	AN960-10L	. Washer (Superseded by NAS1149F0332P)	A/R					X		X
470	AN3-4A	. Bolt: Machine, 10-32 X 0.531"	1					X		X
480	28-12619-1	. Strut Assembly	1					X		X
–	28-12619-4	. . Bracket End Lower	1							
–	28-12619-5	. . Plate, End, Fan Shroud Strut	1							
490	28-12686-11	. Strut	1					X		X
500	AN3-5A	. Bolt, Mach, 10-32 X 0.656"	1					X		X
510	NAS1149F0363P	. Washer, Flat, #10 (0.063")	2					X		X
510	AN960-10	. Washer (Superseded by NAS1149F0363P)	2					X		X

UNCONTROLLED COPY WHEN DOWNLOADED OR PRINTED

Visit www.enstromhelicopter.com for instructions to order an original manual and to register for email notification updates.

FIGURE 3-20 A. ENGINE FAN SHROUD ASSEMBLY
F28F S/N F28F 825 and 280FX S/N 2134 and Previous

ITEM NUMBER	PART NUMBER	DESCRIPTION	QTY PER ASSY	MODELS AFFECTED						
				F-28A	280	F-28C	280C	F-28F	280F	280FX
510	NAS1149F0363P	. Washer, Flat, #10 (0.063")	2					X		X
510	AN960-10	. Washer (Superseded by NAS1149F0363P)	2					X		X
520	MS21044N3	. Nut, Self-Locking	1					X		X
520	AN365-1032A	. Nut (Superseded by MS21044N3)	1					X		X
530	AN503-416-10	. Screw, Machine (Flh), 1/4-20 X 0.625”	6					X		X
530	AN503-416-28	. Screw, Machine (Flh), 1/4-20 X 1.750”	2					X		X
540	NAS1149F0432P	. Washer: Flat, 1/4" (0.032”) Light	8					X		X
540	AN960-416L	. Washer (Superseded by NAS1149F0432P)	8					X		X
550	NAS43HT4-64	. Spacer	2					X		X
560	MS21919WCJ12	. Clamp, Loop, 3/4" Cushioned	3					X		X
565	AN526-1032R8	. Screw	1							
570	MS35206-245	. Screw: Mach (Ph), 8-32 X 0.500”	8					X		X
570	AN515-8R8	. Screw (Superseded by MS35206-245)	8					X		X
575	NAS1149F0332P	. Washer	1					X		X
580	NAS1149FN816P	. Washer: Flat, #8" (.016”) Light	16					X		X
580	AN960-8L	. Washer (Superseded by NAS1149FN816P)	16					X		X
585	AN935-10	. Lock Washer	1					X		X
590	MS35338-42	. Washer: Lock, 0.040" #8 Light	7					X		X
590	AN935-8	. Lock Washer (Superseded by MS35338-42)	7					X		X
600	MS35649-282	. Nut: Hex, 8-32 Unc-2b Light	8					X		X
600	AN340-8	. Nut (Superseded by MS35649-282)	8					X		X
610	280-126001-69	. Bracket, Clamp, Support	3					X		X
620	AN742-F6	. Clamp	1					X		X
630	4508-2	. Tape: Foam, 2"W (0.125" T) Black	82"					X		X

UNCONTROLLED COPY WHEN DOWNLOADED OR PRINTED

Visit www.enstromhelicopter.com for instructions to order an original manual and to register for email notification updates.

*	Obtain from a Lycoming Distributor.
NOTE 1	Parts listed are for both 28-12676-7 and 28-12676 -9 assemblies unless otherwise noted.
**	Effectivity F-28F S/N 830 and subsequent. Effectivity 280FX S/N 2137 and subsequent. Retrofittable to F-28F S/N 509 and 280FX S/N 2001.
•	Effectivity F-28F S/N 805 and subsequent. Effectivity 280FX S/N 2080 and subsequent.
••	Eligibility: F-28F S/N 509-825; 280FX 2001-2134.

UNCONTROLLED COPY WHEN DOWNLOADED OR PRINTED

Visit www.enstromhelicopter.com for instructions to order an original manual and to register for email notification updates.

INTENTIONALLY LEFT BLANK

UNCONTROLLED COPY WHEN DOWNLOADED OR PRINTED
Visit www.enstromhelicopter.com for instructions to order an original manual and to register for email notification updates.

FIGURE 3-20 B. ENGINE FAN SHROUD ASSEMBLY
Early Models

ITEM NUMBER	PART NUMBER	DESCRIPTION	QTY PER ASSY	MODELS AFFECTED						
				F-28A	280	F-28C	280C	F-28F	280F	280FX
–	28-12676-5	. Shroud Assembly 24 VDC 100 Amp Alternator (Agriculture and Special Use Only)	1					X		X
–	28-12676-3	. Shroud Assembly No Auxiliary Oil Cooler (Obsolete)	1	X	X	X	X			
–	28-12676-1	. Shroud Assembly Prestolite Starter (Obsolete)	1	X	X	X	X	X	X	X
10	28-12675-1	. . Fan Shroud Assembly (Obsolete. Was used with 28-12676-1, -3, -5)	1			X	X	X	X	X
20	280-126001-906	. . . Vane Assembly (Used with 28-12675-1)	1			X	X	X	X	X
–	MS20426A3-4	. . . . Rivet, Solid, 3/32" X 1/4"	5			X	X	X	X	X
–	MS20470AD3-4	. . . . Rivet, Solid, 3/32" X 0.250”	2			X	X	X	X	X
–	NAS1068A08	. . . . Nut Plate, 2-Lug, 8-32 Floating	1			X	X	X	X	X
–	280-126001-33	. . . . Baffle Fan Shroud Upper	1			X	X	X	X	X
–	280-126001-51	. . . . Vane	1			X	X	X	X	X
30	28-12656-1	. . . Oil Cooler Duct Assembly (Obsolete. Was used with 28-12675-1)	1			X	X	X	X	X
–	MS21078-3	. . . . Nut Plate	7			X	X	X	X	X
–	NAJ17-02BC	. . . . Nut Plate	2			X	X	X	X	X
–	MS20426AD3-4	. . . . Rivet: Solid, 3/32" X 1/4"	18			X	X	X	X	X
–	28-12652-5	. . . Aft Wall Baffle Duct Assembly	1			X	X	X	X	X
–	28-12653-5	. . . Baffle Oil Cooling Duct	1			X	X	X	X	X
40	28-12149-1	. . . Stub, Fan Shroud	1			X	X	X	X	X
50	28-12655-3	. . Oil Cooler Duct Assembly (Used with 28-12676-1, -3, -5)	1			X	X	X	X	X
–	MS21078-3	. . . Nut Plate, 2-Lug, 10-32	3					X		X
–	MS20426AD3-4	. . . Rivet: Solid 3/32" X 1/4"	6					X		X
–	MS20426A3-4	. . . Rivet: Solid 3/32" X 1/4"	4					X		X
–	28-12650-1	. . . Forward Wall Fan Shroud Assembly	1					X		X

UNCONTROLLED COPY WHEN DOWNLOADED OR PRINTED

Visit www.enstromhelicopter.com for instructions to order an original manual and to register for email notification updates.

FIGURE 3-20 B. ENGINE FAN SHROUD ASSEMBLY
Early Models

ITEM NUMBER	PART NUMBER	DESCRIPTION	QTY PER ASSY	MODELS AFFECTED						
				F-28A	280	F-28C	280C	F-28F	280F	280FX
–	28-12651-13	. . . Surface Lower Oil Cooler Duct	1					X		X
50‡	28-12655-1	. . Oil Cooler Duct Assembly (Was used with 28-12676-1, -3, -5) Superseded by 28-12655-3	1			X	X	X	X	X
–	MS21078-3	. . . Nut Plate, 2-Lug, 10-32	3			X	X	X	X	X
–	MS20426AD3-4	. . . Rivet: Solid 3/32" X 1/4"	6			X	X	X	X	X
–	MS20426A3-4	. . . Rivet: Solid 3/32" X 1/4"	4			X	X	X	X	X
–	28-12650-11	. . . Forward Wall Fan Shroud Assembly	1			X	X	X	X	X
–	28-12651-11	. . . Surface Lower Oil Cooler Duct	1			X	X	X	X	X
60	28-12662-13	. . . Cover Oil Cooler Duct (Used with 28-12655-3)	1			X	X	X	X	X
–	AJW4-30	. . . Wing Fastener	2			X	X	X	X	X
–	GA4-250	. . . Retainer, Stud	2			X	X	X	X	X
60	28-12662-11	. . . Cover (Used with 28-12655-1)	1			X	X	X	X	X
–	AJW4-30	. . . Wing Fastener	2			X	X	X	X	X
–	GA4-250	. . . Retainer, Stud	2			X	X	X	X	X
–	28-12650-17	. . . Forward Wall Fan Shroud Seal (Used With 28-12655-5)	1					X		X
–	G-89	. . . . Fabric: Fire Curtain, 3/64" Thick (In Square Yards)	0.002					X		X
70	28-12674-1	. . Starter Shroud Assembly (Used with 28-12676-1, -3, -5)	1			X	X	X	X	X
–	28-12658-11	. . . Shroud Starter	1			X	X	X	X	X
–	28-12663-11	. . . Doubler Starter Shroud	1			X	X	X	X	X
–	28-12669-11	. . . Curtain Starter Shroud	1			X	X	X	X	X
–	G-89	. . . . Fabric: Fire Curtain, 3/64" Thick (In square yards)	0.03			X	X	X	X	X
80	28-12681-3	. . Duct Assembly Oil Cooler Lower (Used With 28-12676-5)	1					X		X
–	MS20426AD3-3	. . . Rivet, Solid, 3/32" X 3/16"	2					X		X
–	MS20426AD3-4	. . . Rivet: Solid, 3/32" X 1/4"	13					X		X
–	MS20470AD3-4	. . . Rivet, Solid, 3/32" X 0.250”	10					X		X

UNCONTROLLED COPY WHEN DOWNLOADED OR PRINTED

Visit www.enstromhelicopter.com for instructions to order an original manual and to register for email notification updates.

FIGURE 3-20 B. ENGINE FAN SHROUD ASSEMBLY
Early Models

ITEM NUMBER	PART NUMBER	DESCRIPTION	QTY PER ASSY	MODELS AFFECTED						
				F-28A	280	F-28C	280C	F-28F	280F	280FX
–	MS21078-3	. . . Nut Plate, 2-Lug, 10-32	4					X		X
–	MS21080-3	. . .Nut Plate	2					X		X
–	1219-4200-Z3Y	. . . Spring	2					X		X
–	28-12667-13	. . . Doubler- Oil Cooler Duct 28 Volt	1					X		X
–	28-12668-13	. . . Fire Curtain - Oil Cooler Duct 28 Volt	1					X		X
–	28-12682-13	. . . Deflector Fan Shroud 28 Volt	1					X		X
–	28-12683-3	. . . Bracket Assembly Fan Shroud 28 Volt	1					X		X
–	28-12684-11	. . . Angle Left Hand Lower Oil Cool Duct	1					X		X
–	28-12685-13	. . . Shroud Left Side	1					X		X
80	28-12681-1	. . Duct Assembly Oil Cooler Lower (Used with 28-12676-1,-3)	1			X	X	X	X	X
–	MS20426AD3-4	. . . Rivet: Solid, 3/32" X 1/4"	15			X	X	X	X	X
–	MS20470AD3-4	. . . Rivet, Solid, 3/32" X 0.250"	13			X	X	X	X	X
–	MS21078-3	. . . Nut Plate, 2-Lug, 10-32	5			X	X	X	X	X
–	MS21080-3	. . . Nut Plate	2			X	X	X	X	X
–	1219-4200-Z3Y	. . . Spring	2			X	X	X	X	X
–	28-12666-1	. . . Cover Oil Cooler Duct Fan	1			X	X	X	X	X
–	28-12684-11	. . . Angle L/H Lower Oil Cool Duct	1			X	X	X	X	X
–	28-12685-11	. . . Fan Shroud Lt Side Lower	1			X	X	X	X	X
–	28-12667-11	. . . Doubler Oil Cooler Duct	1			X	X	X	X	X
–	28-12668-11	. . . Curtain Baffle Oil Cooler Duct	1			X	X	X	X	X
–	G-89	. . . . Fabric: Fire Curtain, 0.057" Thick (In Square Yards)	0.04			X	X	X	X	X
90	28-12682-11	. . . Deflector Left Side Lower Fan Shroud	1			X	X	X	X	X

UNCONTROLLED COPY WHEN DOWNLOADED OR PRINTED

Visit www.enstromhelicopter.com for instructions to order an original manual and to register for email notification updates.

FIGURE 3-20 B. ENGINE FAN SHROUD ASSEMBLY
Early Models

ITEM NUMBER	PART NUMBER	DESCRIPTION	QTY PER ASSY	MODELS AFFECTED						
				F-28A	280	F-28C	280C	F-28F	280F	280FX
100	28-12683-1	. . . Bracket Assembly Fan Shroud (Use With 28-12681-1 and 28-12681-5)	1			X	X	X	X	X
–	28-12683-11	. . . . Bracket Fan Shroud	1			X	X	X	X	X
–	28-12683-13	. . . . Bracket, Shroud, Lower. Left. Fan	1			X	X	X	X	X
100	28-12683-3	. . . Bracket Assembly Fan Shroud 28 Volt (Use With 28-12681-3)	1					X		X
–	28-12683-13	. . . . Bracket, Shroud, Lower Left Fan	1					X		X
–	28-12683-15	. . . . Bracket Fan Shroud 28 V	1					X		X
110	28-12666-3	. . Cover Oil Cooler Duct Fan Shroud (Used With 28-12681-5)	1			X	X	X	X	X
–	AJW4-30	. . . Wing Fastener	2			X	X	X	X	X
–	GA4-250	. . . Retainer	2			X	X	X	X	X
110	28-12666-1	. . Cover Oil Cooler Duct Fan Shroud (Used With 28-12681-1 and 28-12681-3)	1			X	X	X	X	X
–	AJW4-30	. . . Wing Fastener	2			X	X	X	X	X
–	GA4-250	. . . Retainer	2			X	X	X	X	X
120	28-12687-1	. . Baffle	1			X	X	X	X	X
–	NAS1023D08K	. . . Nut Plate	5			X	X	X	X	X
–	NAJ1-82BC	. . . Nut Plate (Superseded by NAS1023D08K)	5			X	X	X	X	X
–	MS20426AD3-4	. . . Rivet	16			X	X	X	X	X
–	28-12678-11	. . Cover, Auxiliary Oil Cooler (Obsolete. Was used with 28-12676-3)	1			X	X			
–	AN3-4A	. . Bolt (Used with 28-12676-3)	4			X	X			
130	28-12679-3	. . Baffle Assembly 28 Volt (Used with 28-12676-5)	1					X		X
–	MS20426A3-4	. . . Rivet, Solid, 3/32" X 1/4"	10					X		X

UNCONTROLLED COPY WHEN DOWNLOADED OR PRINTED

Visit www.enstromhelicopter.com for instructions to order an original manual and to register for email notification updates.

FIGURE 3-20 B. ENGINE FAN SHROUD ASSEMBLY
Early Models

ITEM NUMBER	PART NUMBER	DESCRIPTION	QTY PER ASSY	MODELS AFFECTED						
				F-28A	280	F-28C	280C	F-28F	280F	280FX
–	MS21078-08	. . . Nut Plate, 2-Lug, 8-32	2					X		X
–	MS21080-3	. . . Nut Plate	1					X		X
–	28-12659-13	. . . Baffle Left Side Fan Shroud	1					X		X
130	28-12679-1	. . Baffle Assembly (Used with 28-12676-1, -3)	1			X	X	X	X	X
–	MS20426A3-4	. . . Rivet, Solid, 3/32" X 1/4"	8			X	X	X	X	X
–	MS20470AD3-4	. . . Rivet, Solid, 3/32" X 0.250"	6			X	X	X	X	X
–	MS21078-08	. . . Nut Plate, 2-Lug, 8-32	3			X	X	X	X	X
140	**PART NOT USED IN THIS ASSEMBLY**									
150	28-12611-5	. . . Bracket Anchor	1			X	X	X	X	X
160	28-12677-1	. . Doubler Assembly (Used with 28-12676-1, -3)	1			X	X	X	X	X
160	28-12677-3	. . Doubler Assembly (Obsolete Was used with 28-12676-5)	1					X		X
170	28-12610-12	. . Baffle Fan Shroud LH	1			X	X	X	X	X
180	28-12610-13	. . Baffle Fan Shroud RH	1			X	X	X	X	X
190	28-12620-1	. Bracket Shroud Fan Up Support	1			X	X	X	X	X
–	MS21069-08	. . Plate Nut	1			X	X	X	X	X
–	MS20426AD3-4	. . Rivet, Solid, 3/32" X 3/16"	2			X	X	X	X	X
200	28-12647-1	. Vane & Splitter Assembly	1					X	X	X
–	MS20470AD4-4	. . Rivet: Solid,1/8"X0.250" Alum	12					X	X	X
–	28-12646-11	. . Upper Splitter	1					X	X	X
–	28-12646-13	. . Lower Splitter	1					X	X	X
–	28-12646-15	. . Clip Splitter	2					X	X	X
–	28-12646-17	. . Clip Splitter	2					X	X	X
–	280-126001-109	. . Vane Assembly	1					X	X	X
–	MS20426AD3-3	. . . Rivet, Solid, 3/32" X 3/16"	6					X	X	X
–	NAS686A08K	. . . Nut Plate	3					X	X	X
200	28-12645-1	. Vane & Splitter Assembly	1			X	X			

UNCONTROLLED COPY WHEN DOWNLOADED OR PRINTED

Visit www.enstromhelicopter.com for instructions to order an original manual and to register for email notification updates.

FIGURE 3-20 B. ENGINE FAN SHROUD ASSEMBLY
Early Models

ITEM NUMBER	PART NUMBER	DESCRIPTION	QTY PER ASSY	MODELS AFFECTED						
				F-28A	280	F-28C	280C	F-28F	280F	280FX
–	MS20470AD4-4	. . Rivet:Solid,1/8"X 0.250" Alum	4			X	X			
–	280-126001-11	. . Vane Splitter	1			X	X			
–	280-126001-3	. . Splitter Assembly	1			X	X			
210	280-126001-9	. Vane Assembly	1			X	X	X	X	X
–	MS20470AD4-4	. . Rivet: Solid,1/8" X 0.250" Alum	5			X	X	X	X	X
–	MS20470AD4-5	. . Rivet, Solid, 1/8" X 0.312" Alum	1			X	X	X	X	X
–	280-126001-15	. . Vane	1			X	X	X	X	X
–	280-126001-53	. . Clip Vane	1			X	X	X	X	X
–	280-126001-55	. . Clip Vane	1			X	X	X	X	X
220	28-126007-7	. Baffle Plate Assembly #1 Cylinder	1			X	X	X	X	X
220	28-126007-5	. Baffle, L/H Aft (Superseded by 28-126007-7)	1			X	X	X	X	X
–	82-35-302-15	. . Receptacle, Spring, Leaf #82	1			X	X	X	X	X
–	MS21069-06K	. . Nut Plate	2			X	X	X	X	X
–	MS20426A3-3.5	. . Rivet	4			X	X	X	X	X
–	NAS1097AD3-4	. . Rivet	2					X		X
230	28-12607-101	. Baffle Plate Assembly #2 Cylinder	1			X	X	X	X	X
230	28-12607-8	. Plate Baffle Assembly (Superseded by 28-12607-101)	1			X	X	X	X	X
–	82-35-302-15	. . Receptacle, Spring, Leaf #82	2			X	X	X	X	X
–	MS21069-06K	. . Nut Plate	2			X	X	X	X	X
–	MS20426AD3-3.5	. . Rivet	4			X	X	X	X	X
–	NAS1097AD3-4	. . Rivet	4			X	X	X	X	X
240	28-126007-17	. Baffle Plate #3 Cylinder	1			X	X	X	X	X
240	28-126007-3	. Plate Baffle (Superseded by 28-126007-17)	1			X	X	X	X	X
–	82-35-302-15	. . Receptacle, Spring, Leaf #82	2			X	X	X	X	X
–	NAS1097AD3-4	. . Rivet	4			X	X	X	X	X
250	28-12607-13	. Baffle Plate #4 Cylinder								
250	28-12607-6	. Plate Baffle Assembly (Superseded by 28-12607-13)	1			X	X	X	X	X

UNCONTROLLED COPY WHEN DOWNLOADED OR PRINTED

Visit www.enstromhelicopter.com for instructions to order an original manual and to register for email notification updates.

FIGURE 3-20 B. ENGINE FAN SHROUD ASSEMBLY
Early Models

ITEM NUMBER	PART NUMBER	DESCRIPTION	QTY PER ASSY	MODELS AFFECTED						
				F-28A	280	F-28C	280C	F-28F	280F	280FX
–	82-35-302-15	. . Receptacle, Spring, Leaf #82	2			X	X	X	X	X
–	NAS1097AD3-4	. . Rivet	4			X	X	X	X	X
260	28-12613-5	. Baffle Fan Shroud	1			X	X	X	X	X
270	28-12613-4	. Baffle Fan Shroud	1			X	X	X	X	X
280	28-12629-11	. Baffle Plate	1			X	X	X	X	X
280	28-12616-1	. Plate Baffle Assembly (Superseded by 28-12629-11)	1			X	X	X	X	X
–	82-19-120-16	. . Fastener Stud Recess	3			X	X	X	X	X
–	82-19-140–16	. . Stud, Oval-Head, 0.198" (0.285”)	4			X	X	X	X	X
–	43-13-1-24	. . Ejector Spring	7			X	X	X	X	X
–	82-32-101-20	. . Retainer, Ring, Split #82 Stud	7			X	X	X	X	X
290	28-12628-11	. Baffle Plate	1			X	X	X	X	X
290	28-12614-1	. Baffle Plate Assembly (Superseded by 28-12628-11)	1			X	X	X	X	X
–	82-19-120-16	. . Fastener Stud Recess	3			X	X	X	X	X
–	82-19-140–16	. . Stud, Oval-Head, 0.198"(0.285”)	5			X	X	X	X	X
–	43-13-1-24	. . Spring Ejector	8			X	X	X	X	X
–	82-32-101-20	. . Retainer, Ring, Split #82 Stud	8			X	X	X	X	X
291	8X5/8	. . Screw (Used with 280A and 290A)	15			X	X	X	X	X
291	MS51861-36	. . Screw (Used with 280A and 290A) (Alternate)	15			X	X	X	X	X
292≡	A01789-8Z-1D	. . Nutplate	15			X	X	X	X	X
300	28-12615-1	. Plate Baffle Assembly	1			X	X	X	X	X
–	82-35-302-15	. . Receptacle, Spring, Leaf #82	6			X	X	X	X	X
–	MS20426A3-4	. . Rivet, Solid, 3/32" X 1/4"	12			X	X	X	X	X
310	28-12609-3	. Baffle Plate	1			X	X	X	X	X
–	82-35-302-15	. . Receptacle, Spring, Leaf #82	1			X	X	X	X	X
–	MS21071-06	. . Nut Plate	1			X	X	X	X	X

UNCONTROLLED COPY WHEN DOWNLOADED OR PRINTED

Visit www.enstromhelicopter.com for instructions to order an original manual and to register for email notification updates.

FIGURE 3-20 B. ENGINE FAN SHROUD ASSEMBLY
Early Models

ITEM NUMBER	PART NUMBER	DESCRIPTION	QTY PER ASSY	MODELS AFFECTED						
				F-28A	280	F-28C	280C	F-28F	280F	280FX
–	MS21069-06	. . Nut Plate	1			X	X	X	X	X
–	NAS1097AD3-4	. . Rivet	2			X	X	X	X	X
–	280-127505-17	. . Stub Heat Duct	1			X	X	X	X	X
–	MS20470AD3-4	. . Rivet, Solid, 3/32" X 0.250"	4			X	X	X	X	X
–	NAS1097AD3-3	. . Rivet	4			X	X	X	X	X
320	28-12617-1	. Plate Baffle Assembly	1			X	X	X	X	X
–	G-89	. . Fabric: Fire Curtain, 3/64" Thick (In square yards)	0.002			X	X	X	X	X
–	MS20470A3-3	. . Rivet, Solid, 3/32" X 0.188"	6			X	X	X	X	X
–	NAS1149FN316P	. . Washer: Flat, #3 (0.016") Light	6			X	X	X	X	X
–	AN960-3	. . Washer (Superseded by NAS 1149FN316P)	6			X	X	X	X	X
–	MS21069-06	. . Nut Plate	5			X	X	X	X	X
–	MS20426AD3-3	. . Rivet, Solid, 3/32" X 3/16"	10			X	X	X	X	X
330	28-126008-1	. Plate Baffle Assembly	1			X	X	X	X	X
–	82-35-302-15	. . Receptacle, Spring, Leaf #82	1			X	X	X	X	X
–	MS21069-06	. . Nut Plate	3			X	X	X	X	X
–	NAS1097AD3-3	. . Rivet	2			X	X	X	X	X
–	NAS1097AD3-4	. . Rivet: Solid, 3/32" X 1/4"	10			X	X	X	X	X
–	28-12608-4	. . Tab Support	1			X	X	X	X	X
–	28-12621-1	. . Bracket Cover	1			X	X	X	X	X
–	28-181008-	. . Ducting Stub	1			X	X	X	X	X
340	AN515-6-6	. Screw, Machine (RH), 6-32 X 0.375"	A/R			X	X	X	X	X
350	NAS1149FN632P	. Washer, Flat #6 Bolt Size	A/R			X	X	X	X	X
350	AN960-6	. Washer (Superseded by NAS1149FN632P)	A/R			X	X	X	X	X
360	MS35338-41	. Washer, Lock, #6 (0.031")	A/R			X	X	X	X	X
360	AN935-6	. Lock Washer (Superseded by MS35338-41)	A/R			X	X	X	X	X
370	MS35649-262	. Nut, Hex, 6-32 Light	A/R			X	X	X	X	X

UNCONTROLLED COPY WHEN DOWNLOADED OR PRINTED

Visit www.enstromhelicopter.com for instructions to order an original manual and to register for email notification updates.

FIGURE 3-20 B. ENGINE FAN SHROUD ASSEMBLY
Early Models

ITEM NUMBER	PART NUMBER	DESCRIPTION	QTY PER ASSY	MODELS AFFECTED						
				F-28A	280	F-28C	280C	F-28F	280F	280FX
370	AN340-632	. Nut (Superseded by MS35649-262)	A/R			X	X	X	X	X
380	NP500-456-7	. Screw, 1/4-20 X 7/16”	3			X	X	X	X	X
380	NK500-416-7	. Screw (Superseded by NP500-456-7)	3			X	X	X	X	X
390	NAS1149F0432P	. Washer: Flat, 1/4" (0.032”) Light	3			X	X	X	X	X
390	AN960-416L	. Washer (Superseded by NAS1149F0432P)	3			X	X	X	X	X
400	AN502-10-8	. Screw	3			X	X	X	X	X
410	MS35333-39	. Lock Washer	3			X	X	X	X	X
410	AN936A10	. Lock Washer (Superseded by MS35333-39)	3			X	X	X	X	X
420*	65614	. Plug, Attaching	3			X	X	X	X	X
430	MS35206-244	. Screw, Machine (RH), 8-32 X 0.438"	5			X	X	X	X	X
430	AN515-8R7	. Screw (Superseded by MS35206-244)	5			X	X	X	X	X
440	NAS1149FN816P	. Washer: Flat, #8" (0.016”) Light	5			X	X	X	X	X
440	AN960-8L	. Washer (Superseded by NAS1149FN816P)	5			X	X	X	X	X
450	AN3-3A	. Bolt, Mach, 10-32 X 0.469"	A/R			X	X	X	X	X
460	NAS1149F0432P	. Washer, Flat, #10 (0.032") Light	A/R			X	X	X	X	X
460	AN960-10L	. Washer (Superseded by NAS1149F0332P)	A/R			X	X	X	X	X
470	AN3-4A	. Bolt: Machine, 10-32 X 0.531"	1			X	X	X	X	X
480	28-12619-1	. Strut Assembly	1			X	X	X	X	X
–	28-12619-4	. . Bracket End Lower	1							
–	28-12619-5	. . Plate, End, Fan Shroud Strut	1							
490	28-12686-11	. Strut	1			X	X	X	X	X
500	AN3-5A	. Bolt, Mach, 10-32 X 0.656"	1			X	X	X	X	X
510	NAS1149F0363P	. Washer, Flat, #10 (0.063")	2			X	X	X	X	X
510	AN960-10	. Washer (Superseded by NAS1149F0363P)	2			X	X	X	X	X

UNCONTROLLED COPY WHEN DOWNLOADED OR PRINTED

Visit www.enstromhelicopter.com for instructions to order an original manual and to register for email notification updates.

FIGURE 3-20 B. ENGINE FAN SHROUD ASSEMBLY
Early Models

ITEM NUMBER	PART NUMBER	DESCRIPTION	QTY PER ASSY	MODELS AFFECTED						
				F-28A	280	F-28C	280C	F-28F	280F	280FX
520	MS21044N3	. Nut, Self-Locking	1			X	X	X	X	X
520	AN365-1032A	. Nut (Superseded by MS21044N3)	1			X	X	X	X	X
530	AN503-416-10	. Screw, Machine (Flh), 1/4-20 X 0.625”	6			X	X	X	X	X
530	AN503-416-28	. Screw, Machine (Flh), 1/4-20 X 1.750”	2			X	X	X	X	X
530	AN503-416-10	. Screw, Machine (Flh), 1/4-20 X 0.625” (No Auxiliary Cooler)	8			X	X			
540	NAS1149F0432P	. Washer: Flat, 1/4" (0.032”) Light	8			X	X	X	X	X
540	AN960-416L	. Washer (Superseded by NAS1149F0432P)	8			X	X	X	X	X
550	NAS43HT4-64	. Spacer	2			X	X	X	X	X
560	MS21919WCJ12	. Clamp, Loop, 3/4" Cushioned	3			X	X	X	X	X
565	AN526-1032R8	. Screw	1			X	X	X	X	X
570	MS35206-245	. Screw: Mach (Ph), 8-32 X 0.500”	9			X	X	X	X	X
570	AN515-8R8	. Screw (Superseded by MS35206-245)	9			X	X	X	X	X
575	NAS1149F0332P	. Washer	1			X	X	X	X	X
580	NAS1149FN816P	. Washer: Flat, #8" (0.016”) Light	16			X	X	X	X	X
580	AN960-8L	. Washer (Superseded by NAS1149FN816P)	16			X	X	X	X	X
585	AN935-10	. Lock Washer	1			X	X	X	X	X
590	MS35338-42	. Washer: Lock, 0.040" #8 Light	7			X	X	X	X	X
590	AN935-8	. Lock Washer (Superseded by MS35338-42)	7			X	X	X	X	X
595	AN345-10	. Nut	1			X	X	X	X	X
600	MS35649-282	. Nut: Hex, 8-32 Unc-2b Light	7			X	X	X	X	X
600	AN340-8	. Nut (Superseded by MS35649-282)	7			X	X	X	X	X

UNCONTROLLED COPY WHEN DOWNLOADED OR PRINTED

Visit www.enstromhelicopter.com for instructions to order an original manual and to register for email notification updates.

FIGURE 3-20 B. ENGINE FAN SHROUD ASSEMBLY
Early Models

ITEM NUMBER	PART NUMBER	DESCRIPTION	QTY PER ASSY	MODELS AFFECTED						
				F-28A	280	F-28C	280C	F-28F	280F	280FX
610	280-126001-69	. Bracket, Clamp, Support	3			X	X	X	X	X
620	AN742-F6	. Clamp	1			X	X	X	X	X
630	4508-2	. Tape: Foam, 2" W (0.125" T) Black	82"			X	X	X	X	X

* Obtain from a Lycoming Distributor.

‡ Effectivity F28 S/N 766 - 775 and subsequent. Effectivity 280 S/N 2049 – 2057, and 2059 and subsequent. Retrofittable to F28F S/N 509 and 280FX S/N 2001.

NOTE 1 Parts listed are for 28-12676-1, 28-12676-3 and 28-12676 -5 assemblies unless otherwise noted.

UNCONTROLLED COPY WHEN DOWNLOADED OR PRINTED

Visit www.enstromhelicopter.com for instructions to order an original manual and to register for email notification updates.

INTENTIONALLY LEFT BLANK

UNCONTROLLED COPY WHEN DOWNLOADED OR PRINTED
Visit www.enstromhelicopter.com for instructions to order an original manual and to register for email notification updates.

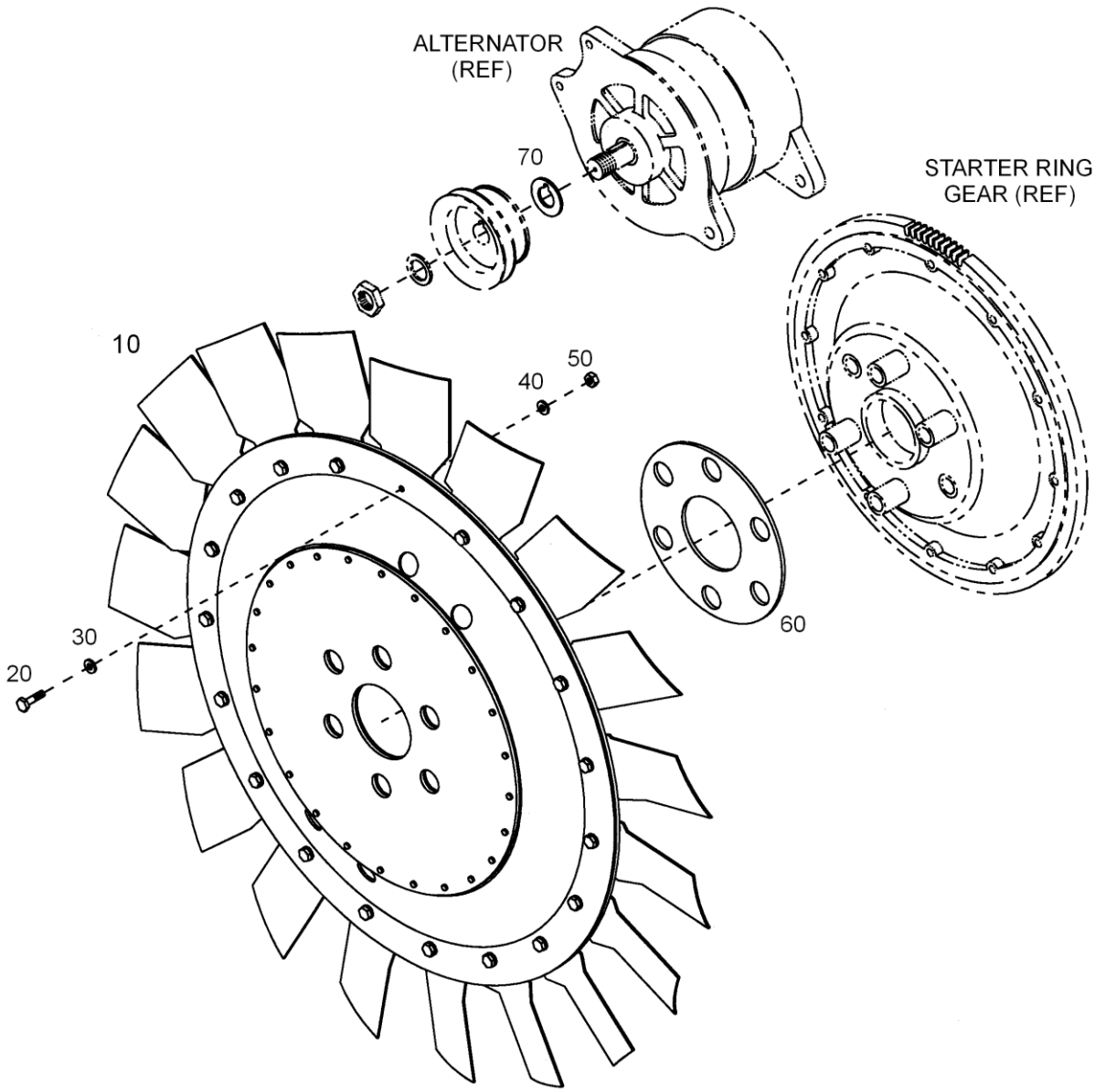

FIGURE 3-21. COOLING FAN AND ALTERNATOR INSTALLATION (ALL MODELS)

UNCONTROLLED COPY WHEN DOWNLOADED OR PRINTED

Visit www.enstromhelicopter.com for instructions to order an original manual and to register for email notification updates.

FIGURE 3-21. COOLING FAN AND ALTERNATOR INSTALLATION (ALL MODELS)

ITEM NUMBER	PART NUMBER	DESCRIPTION	QTY PER ASSY	MODELS AFFECTED						
				F-28A	280	F-28C	280C	F-28F	280F	280FX
10	28-12601-1	. Fan Assembly	1	X	X	X	X	X	X	X
–	28-12603-1	. . Fan Disk Assembly	1	X	X	X	X	X	X	X
–	MS20470AD5-7	. . . Rivet: Solid, 5/32" X 0.438"	24	X	X	X	X	X	X	X
–	28-12603-3	. . . Disc Fan Engine	1	X	X	X	X	X	X	X
–	28-12603-4	. . Stiffener Disk Fan Engine	1	X	X	X	X	X	X	X
–	28-12605-1	. . Ring Blade Assembly	1	X	X	X	X	X	X	X
–	28-12642-1	. . . Ring, Weight, Mass	1	X	X	X	X	X	X	X
–	28-12644-1	. . . Blade, Fan, Engine Cooling	19	X	X	X	X	X	X	X
–	MS20427M4-7	. . . Rivet, Solid, 1/8" X 0.438"	38	X	X	X	X	X	X	X
20	AN3-6A	. . Bolt	19	X	X	X	X	X	X	X
20*	AN3-5A	. . Bolt	A/R	X	X	X	X	X	X	X
30	AN960-10	. . Washer	19	X	X	X	X	X	X	X
30*	AN960-10L	. . Washer	A/R	X	X	X	X	X	X	X
40	AN960-10L	. . Washer	19	X	X	X	X	X	X	X
40*	AN960-10	. . Washer	A/R	X	X	X	X	X	X	X
50	MS21083N3	. . Nut	19	X	X	X	X	X	X	X
50	AN364-1032A	. . Nut (Superseded by MS21083N3)	19	X	X	X	X	X	X	X
60	28-13231-7	. Shim Drive Pulley	1	X	X	X	X	X	X	X
70	28-21017-1	. Spacer, Alternator	1	X	X	X	X	X	X	X
–**	37A19773-376	. Alternator Belt	1	X	X	X	X	X	X	X

* Used as required for balancing the fan assembly.

** Obtain from a Lycoming distributor

UNCONTROLLED COPY WHEN DOWNLOADED OR PRINTED

Visit www.enstromhelicopter.com for instructions to order an original manual and to register for email notification updates.

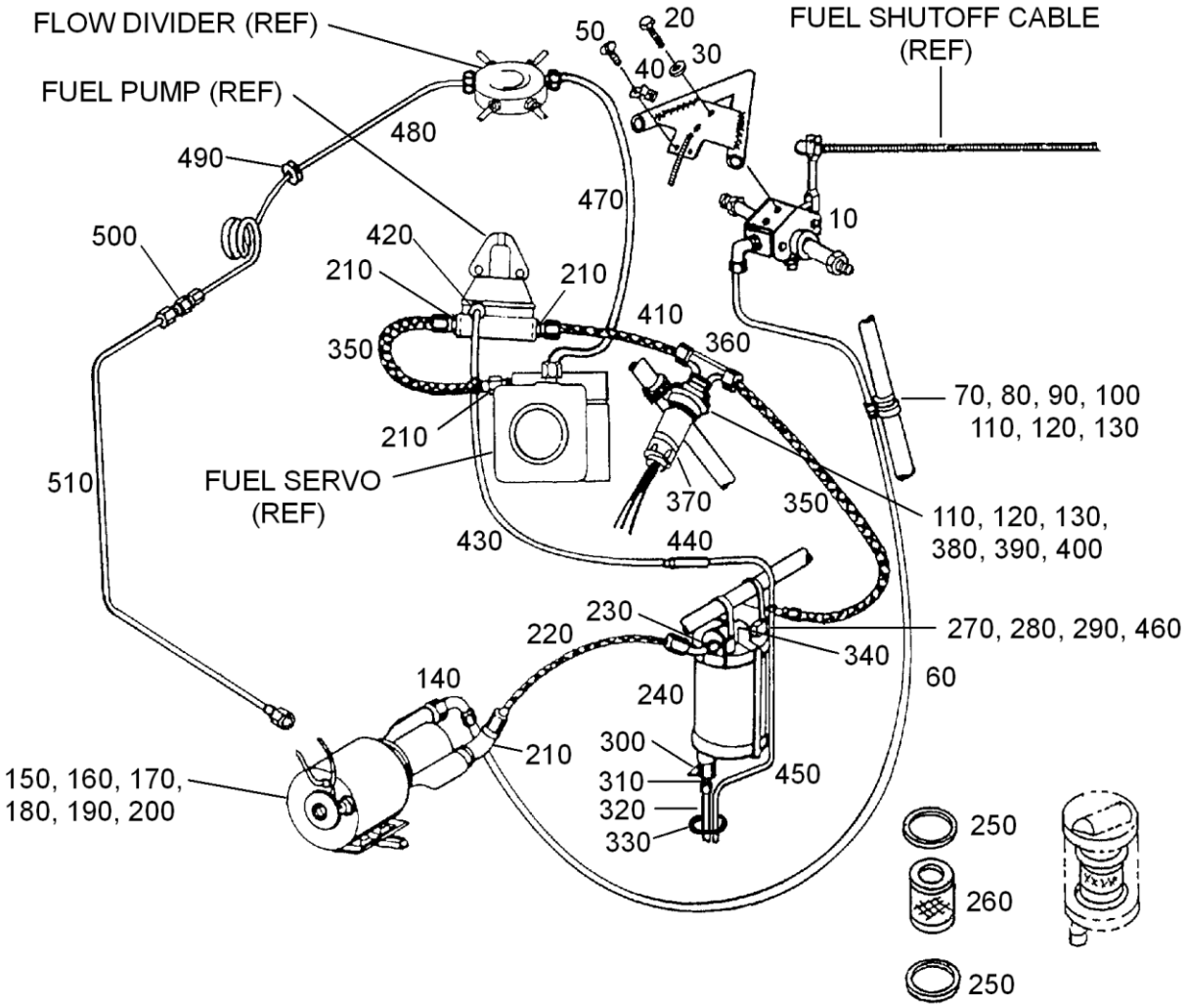

FIGURE 3-22. ENGINE FUEL SYSTEM (A MODELS)

UNCONTROLLED COPY WHEN DOWNLOADED OR PRINTED

Visit www.enstromhelicopter.com for instructions to order an original manual and to register for email notification updates.

FIGURE 3-22. ENGINE FUEL SYSTEM (A MODELS)

ITEM NUMBER	PART NUMBER	DESCRIPTION	QTY PER ASSY	MODELS AFFECTED						
				F-28A	280	F-28C	280C	F-28F	280F	280FX
10	280-124001-1	. Fuel Shutoff Valve Assembly (See Fig. 3-25 for breakdown)	1	X	X					
20	AN3-3A	. Bolt	2	X	X					
30	AN960-10L	. Washer	2	X	X					
40	28-12400-23	. Bracket	1	X	X					
50	AN526C832R8	. Screw	2	X	X					
60	28-12100-8	. Line Assembly (Obsolete)	1	X	X					
60	28-12142-1	. Line Assembly (Obsolete was alternate)	1	X	X					
70	MS21919WF6	. Clamp	1	X	X					
80	MS21919WF12	. Clamp	1	X	X					
90	MS21919WF14	. Clamp	1	X	X					
100	AN515-8-16	. Screw, 8-32 X 1	1	X	X					
100	AN515-8R16	. Screw (Superseded by AN515-8-16)	1	X	X					
110	NAS1149FN816P	. Washer	6	X	X					
110	AN960-8L	. Washer (Superseded by NAS1149FN816P)	6	X	X					
120	MS35338-42	. Lock Washer	2	X	X					
120	AN935-8	. Lock Washer (Superseded by MS35338-42)	2	X	X					
130	MS35649-282	. Nut, Hex 8-32 UNC-2B	2	X	X					
130	AN340-8	. Nut (Superseded by MS35649-282)	2	X	X					
140	6-V5OX-S	. Elbow (Obsolete)	1	X	X					
–	MS29512-06	. . O-Ring (Obsolete)	1	X	X					
150**	A-8110-G	. Boost Pump	1	X	X					
150*	8110-CC	. Boost Pump (Obsolete)	1	X	X					
160	NP500-456-7	. Screw	4	X	X					
160*	NK500-416-7	. Screw (Superseded by NP500-456-7)	4	X	X					
160**	AN4-3A	. Bolt	4	X	X					
170*	NAS1149F0432P	. Washer	12	X	X					

UNCONTROLLED COPY WHEN DOWNLOADED OR PRINTED

Visit www.enstromhelicopter.com for instructions to order an original manual and to register for email notification updates.

FIGURE 3-22. ENGINE FUEL SYSTEM (A MODELS)

ITEM NUMBER	PART NUMBER	DESCRIPTION	QTY PER ASSY	MODELS AFFECTED						
				F-28A	280	F-28C	280C	F-28F	280F	280FX
170*	AN960-416L	. Washer (Superseded by NAS1149F0432P)	12	X	X					
170**	NAS1149F0432P	. Washer	8	X	X					
170**	AN960-416L	. Washer (Superseded by NAS1149F0432P)	8	X	X					
180**	MS21083N4	. Nut	4	X	X					
180**	AN364-428A	. Nut (Superseded by MS21083N4)	4	X	X					
190 **	28-12101-11	. Bracket	2	X	X					
200**	QS200-M40S	. Clamp	1	X	X					
210	MS51525-B6-8	. Connector	4	X	X					
210	6-F5OX-S	. Connector (Superseded by MS51525-B6-8)	4	X	X					
–	MS28778-6	. . O-Ring	1	X	X					
–	MS29512-06	. . O-Ring (Superseded by MS28778-6)	1	X	X					
220	270624141H0080	. Hose Assembly	1	X	X					
230	AN816-6	. Connector	2	X	X					
230	6-6FBTX-S	. Connector (Superseded by AN816-6)	2	X	X					
240	G199-105-4	. Fuel Strainer Assembly	1	X	X					
250	2212A	. . Gasket	2	X	X					
260	33-199-916	. . Filter	1	X	X					
–	33-199-36	. . Spring Clip	1	X	X					
270	AN4-13A	. Bolt	2	X	X					
280	NAS1149F0463P	. Washer	4	X	X					
280	AN960-416	. Washer (Superseded by NAS1149F0463P)	4	X	X					
290	MS21083N4	. Nut	2	X	X					
290	AN364-428A	. Nut (Superseded by MS21083N4)	2	X	X					
300	K9000S-1A	. Drain Valve (Obsolete)	1	X	X					

UNCONTROLLED COPY WHEN DOWNLOADED OR PRINTED

Visit www.enstromhelicopter.com for instructions to order an original manual and to register for email notification updates.

FIGURE 3-22. ENGINE FUEL SYSTEM (A MODELS)

ITEM NUMBER	PART NUMBER	DESCRIPTION	QTY PER ASSY	MODELS AFFECTED						
				F-28A	280	F-28C	280C	F-28F	280F	280FX
310	AN816-4D	. Connector	1	X	X					
310	4-FBTX-D	. Connector (Superseded by AN816-4D)	1	X	X					
320	28-12100-10	. Breather Line	1	X	X					
330	AN931-8-13	. Grommet	1	X	X					
340	MS20913-1D	. Plug (Obsolete)	1	X	X					
350	624117-6-0180	. Hose Assembly	2	X	X					
360	MS51529B6S	. Tee	1	X	X					
360	6-S5OX-S	. Tee (Superseded by MS51529B6S)	1	X	X					
–	MS28778-6	. . O-Ring	1	X	X					
–	MS29512-06	. . O-Ring (Superseded by MS28778-6)	1	X	X					
370	8190002	. Pressure Switch	1	X	X					
380	MS21919WF16	. Clamp	1	X	X					
390	MS21919WF10	. Clamp	1	X	X					
400	MS35206-246	. Screw	1	X	X					
400	AN515-8R10	. Screw	1	X	X					
410	624100-6-0060	. Hose Assembly	1	X	X					
420	MS20823	. Elbow	1	X	X					
420	4-VBTX-S	. Elbow (Superseded by MS20823)	1	X	X					
430	624100-4-0120	. Hose Assembly	1	X	X					
440	AN815-4	. Union	1	X	X					
440	4-LHBTX-S	. Union (Superseded by AN815-4)	1	X	X					
450	28-12146-1	. Vent Line	1	X	X					
450	28-12100-12	. Vent Line (Superseded by 28-12146-1)	1	X	X					
460	MS21919WDF3	. Clamp	1	X	X					
460	MS9352-03	. Clamp (Superseded by MS21919WDF3)	1	X	X					
470†	75386	. Hose Assembly	1	X	X					
480	28-18103-4	. Fuel Pressure Line	1	X	X					

UNCONTROLLED COPY WHEN DOWNLOADED OR PRINTED

Visit www.enstromhelicopter.com for instructions to order an original manual and to register for email notification updates.

FIGURE 3-22. ENGINE FUEL SYSTEM (A MODELS)

ITEM NUMBER	PART NUMBER	DESCRIPTION	QTY PER ASSY	MODELS AFFECTED						
				F-28A	280	F-28C	280C	F-28F	280F	280FX
480	28-18103-3	. Fuel Pressure Line (Superseded by 28-18103-4)	1	X	X					
480	28-181001-11	. Fuel Pressure Line (Alternate)	1	X	X					
490	AN931-2-9	. . Grommet	1	X	X					
500	AN919-1	. Reducer	1	X	X					
510	28-18103-5	. Fuel Pressure Line (Obsolete)	1	X	X					
510‡	28-181002-1	. Fuel Pressure Line	1	X	X					

* Early production aircraft

** Later production aircraft, parts retrofittable to early production aircraft.

† Obtain from Lycoming Distributor.

‡ Use with P/N 28-181001-11

UNCONTROLLED COPY WHEN DOWNLOADED OR PRINTED

Visit www.enstromhelicopter.com for instructions to order an original manual and to register for email notification updates.

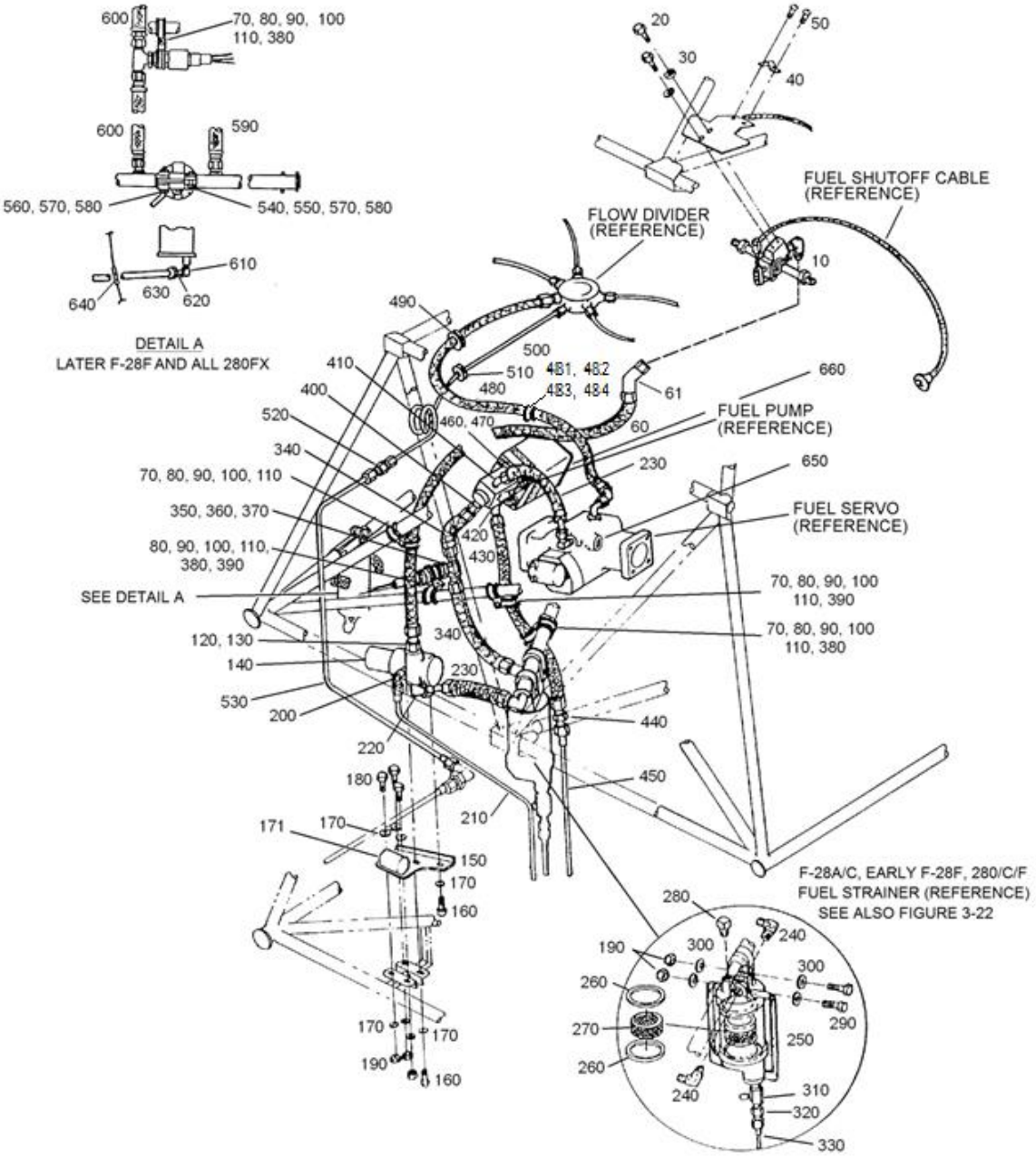

FIGURE 3-23. ENGINE FUEL SYSTEM (C, F MODELS)

UNCONTROLLED COPY WHEN DOWNLOADED OR PRINTED
Visit www.enstromhelicopter.com for instructions to order an original manual and to register for email notification updates.

FIGURE 3-23. ENGINE FUEL SYSTEM (C, F MODELS)

ITEM NUMBER	PART NUMBER	DESCRIPTION	QTY PER ASSY	MODELS AFFECTED						
				F-28A	280	F-28C	280C	F-28F	280F	280FX
10	280-124001-1	. Fuel Shutoff Valve Assembly (See Fig. 3-25 for breakdown)	1			X	X	X	X	X
20	AN3-4A	. Bolt	2			X	X	X	X	X
30	AN960-10	. Washer	2			X	X	X	X	X
40	28-12400-23	. Bracket	1			X	X	X	X	X
50	AN525-832R8	. Screw	2			X	X	X	X	X
60	28-12464-3	. Fuel Line Assembly	1			X	X	X	X	X
–	AN815-6	. . Union	1			X	X	X	X	X
–	28-124003-19	. . Hose Assembly	1			X	X	X	X	X
61	28-124002-3	. . Line Assembly	1			X	X	X	X	X
70*	MS21919WCJ12	. Clamp	4			X	X	X	X	X
80	MS35206-246	. Screw	3			X	X	X	X	X
80	AN515-8R10	. Screw (Superseded by MS35206-246)	3			X	X	X	X	X
90	NAS1149FN816P	. Washer	6			X	X	X	X	X
90	AN960-8L	. Washer (Superseded by NAS1149FN816P)	6			X	X	X	X	X
100	MS35338-42	. Lock Washer	3			X	X	X	X	X
100	AN935-8	. Lock Washer (Superseded by MS35338-42)	3			X	X	X	X	X
110	MS35649-282	. Nut	3			X	X	X	X	X
110	AN340-8	. Nut (Superseded by MS35649-282)	3			X	X	X	X	X
120	MS51525B6-8Z	. Adapter	1			X	X	X	X	X
120	6-8 F5OX-S	. Adapter (Alternate)	1			X	X	X	X	X
130♦	MS28778-12	. O-Ring	1			X	X	X	X	X
140	A-10019-D	. Boost Pump, 12 VDC	1			X	X	X	X	X
140	A-10019-E	. Boost Pump, 24 VDC	1			X	X	X	X	X
150	28-124006-11	. Bracket, Boost Pump	1			X	X	X	X	X
160	NP500-465-7	. Screw	2			X	X	X	X	X
160	AN500-416-7	. Screw (Superseded by NP500-465-7)	2			X	X	X	X	X

UNCONTROLLED COPY WHEN DOWNLOADED OR PRINTED

Visit www.enstromhelicopter.com for instructions to order an original manual and to register for email notification updates.

FIGURE 3-23. ENGINE FUEL SYSTEM (C, F MODELS)

ITEM NUMBER	PART NUMBER	DESCRIPTION	QTY PER ASSY	MODELS AFFECTED						
				F-28A	280	F-28C	280C	F-28F	280F	280FX
170	AN960-416L	. Washer	8			X	X	X	X	X
171	48P6	. Filter, RFI	1			X	X	X	X	X
180	AN4-3A	. Bolt	3			X	X	X	X	X
190	AN364-428A	. Nut	7			X	X	X	X	X
190	MS21083N4	. Nut (Alternate)	7			X	X	X	X	X
200	MS20822-4	. Elbow	1			X	X	X	X	X
210	28-123018-1	. Line Assembly	1			X	X	X	X	X
220	849-FSO-06-08	. Adapter	1			X	X	X	X	X
230	28-12462-1	. Hose Assembly	2			X	X	X	X	X
240	MS20822-6-6	. . Elbow	2			X	X	X	X	X
250	G199-105-4	. . Fuel Strainer Assembly	1			X	X	X	X	X
260	2212A	. . Gasket	2			X	X	X	X	X
270	33-199-916	. . Filter	1			X	X	X	X	X
–	33-199-36	. . Spring Clip	1			X	X	X	X	X
280	MS20913-1	. Plug	1			X	X	X	X	X
290	AN4-13A	. Bolt	2			X	X	X	X	X
300	NAS1149F0463P	. Washer	4			X	X	X	X	X
300	AN960-416	. Washer (Superseded by NAS1149F0463P)	4			X	X	X	X	X
310	CAV-110R	. Drain Valve	1			X	X	X	X	X
320	AN816-4D	. Fitting	1			X	X	X	X	X
330	28-12400-910	. Drain Line Assembly	1			X	X	X	X	X
340	28-12461-1	. Hose Assembly	2			X	X	X	X	X
350	MS51529B6S	. Tee	1			X	X	X	X	X
360	MS28778-6	. O-Ring	1			X	X	X	X	X
370	8190042	. Fuel Pressure Switch	1			X	X	X	X	X
380	MS21919WCJ16	. Clamp	2			X	X	X	X	X
390	MS21919WCJ10	. Clamp	2			X	X	X	X	X
400	AN816-6	. Adapter	1			X	X	X	X	X
410	MS20823-6	. Elbow	1			X	X	X	X	X

UNCONTROLLED COPY WHEN DOWNLOADED OR PRINTED

Visit www.enstromhelicopter.com for instructions to order an original manual and to register for email notification updates.

FIGURE 3-23. ENGINE FUEL SYSTEM (C, F MODELS)

ITEM NUMBER	PART NUMBER	DESCRIPTION	QTY PER ASSY	MODELS AFFECTED						
				F-28A	280	F-28C	280C	F-28F	280F	280FX
420	MS20823-4	. Elbow	1			X	X	X	X	X
430	28-124003-13	. Hose Assembly	1			X	X	X	X	X
440	AN815-4	. Union	1			X	X	X	X	X
450	28-12146-1	. Line Assembly	1			X	X	X	X	X
460	AN75A41	. Bolt	4			X	X	X	X	X
470	AN960-516	. Washer	4			X	X	X	X	X
470	AN960-516	. Washer	4			X	X	X	X	X
480†	LW-12878-4S260	. Hose Assembly	1			X	X	X	X	X
480	28-12463-1	. Hose Assembly (Superseded by LW-12878-4S260)	1			X	X	X	X	X
481	MS21919WCJ10	. Clamp	1			X	X	X	X	X
482	MS35206-245	. Screw	1			X	X	X	X	X
483	NAS1149FN816P	. Washer	1			X	X	X	X	X
484Δ	28-124005-1	. Clip Assembly	1			X	X	X	X	X
490	AN931-12-20	. Grommet	1			X	X	X	X	X
500‡	28-181001-3	. Fuel Pressure Line	1					X		X
500	28-181001-11	. Fuel Pressure Line Assembly (Superseded by 28-181001-3)	1			X	X	X	X	X
510	AN931-2-9	. . Grommet	1			X	X	X	X	X
520	AN919-1S	. Reducer	1			X	X	X	X	X
530	28-181002-1	. Fuel Pressure Line Assembly	1			X	X	X	X	X
540**	28-12480-1	. Fuel Strainer Clamp	1					X		X
550**	AN3-11A	. Bolt	1					X		X
560**	AN3-14A	. Bolt	1					X		X
570**	NAS1149F0363P	. Washer	4					X		X
570**	AN960-10	. Washer (Superseded by NAS1149F0363P)	4					X		X
580**	MS21044N3	. Nut	2					X		X
580**	AN365-1032A	. Nut (Superseded by MS21044N3)	2					X		X

UNCONTROLLED COPY WHEN DOWNLOADED OR PRINTED

Visit www.enstromhelicopter.com for instructions to order an original manual and to register for email notification updates.

FIGURE 3-23. ENGINE FUEL SYSTEM (C, F MODELS)

ITEM NUMBER	PART NUMBER	DESCRIPTION	QTY PER ASSY	MODELS AFFECTED						
				F-28A	280	F-28C	280C	F-28F	280F	280FX
–	MS20995C32	. Safety Wire	A/R					X		X
590**	28-12462-3	. Hose Assembly	1					X		X
600**	28-12461-3	. Hose Assembly	2					X		X
610**	AN914-1D	. Elbow	1					X		X
620**	CAV-110RV	. Drain Valve (Preferred)	1					X		X
620**	CAV-110R	. Drain Valve (Acceptable Alternate)	1					X		X
620**	CAV-110H-U	. Drain Valve (Obsolete)	1					X		X
630**	28-12133-11	. Hose	1					X		X
640**	CGP-2	. Grommet Strip	A/R					X		X
640**	GS-3	. Grommet Strip (Obsolete)	A/R					X		X
650	951789	. O-ring, Finger Screen Plug	1					X		X
660	02A21376	. Elbow Fitting, Restricted (Engine Driven Fuel Pump)	1					X		X
–	MS28034-1	. Temperature Sensor	1					X		X

* Quantity is five (5) with relocated fuel strainer assembly.

** Used on F-28F, S/N 746 and subsequent; 280FX, S/N 2012 and subsequent. Retrofittable to earlier serial number aircraft.

† Order from your Lycoming Distributor.

‡ Effectivity F28F S/N 832 – subsequent and 280FX S/N 2142 – subsequent. Retrofittable to F28F S/N 509 – subsequent and 280FX S/N 2001 – subsequent.

♦ An O-Ring is supplied when using P/N 6-8 F5OX-S.

Δ The clip assembly installs to the magneto attachment stud.

UNCONTROLLED COPY WHEN DOWNLOADED OR PRINTED

Visit www.enstromhelicopter.com for instructions to order an original manual and to register for email notification updates.

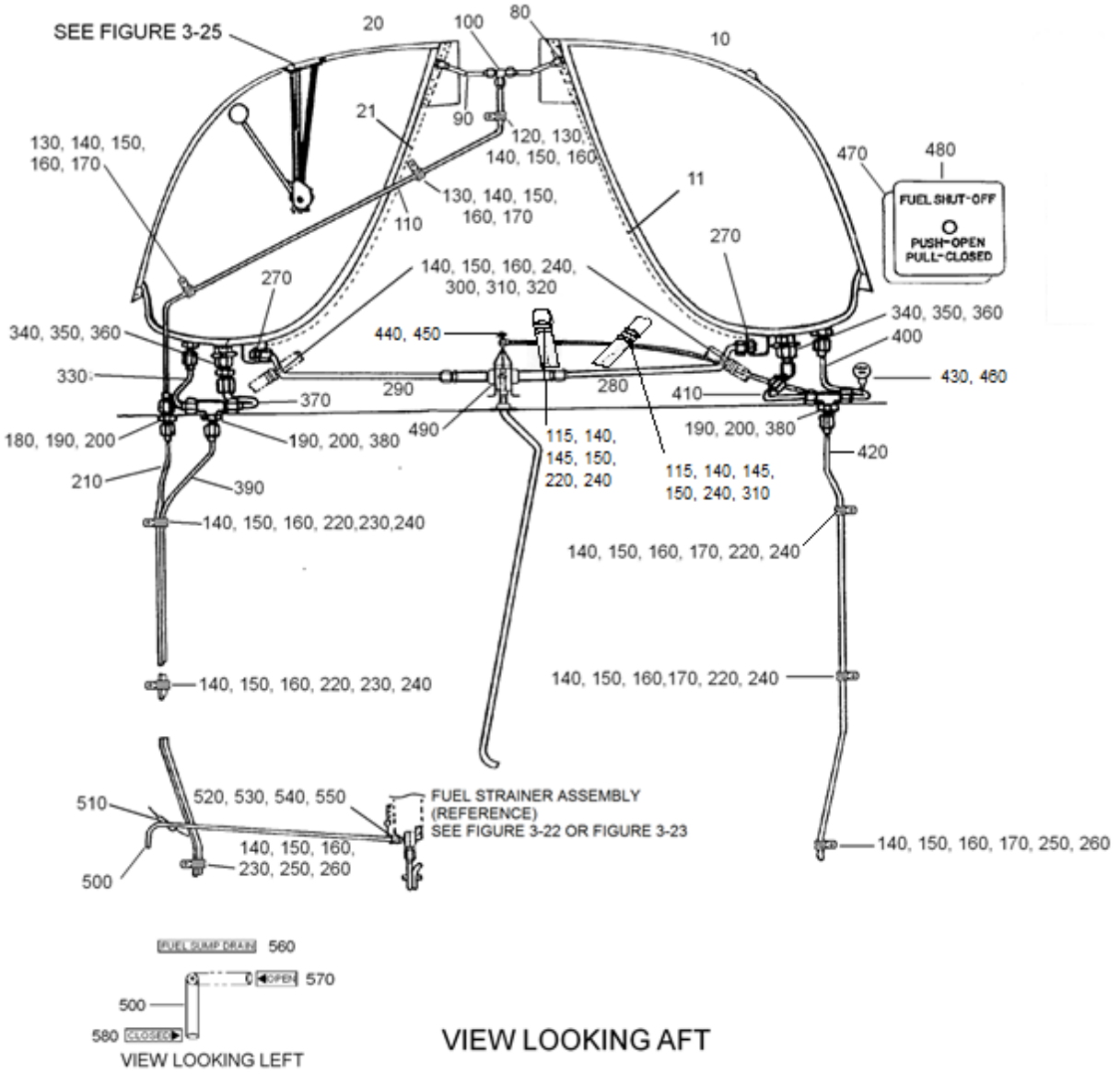

Sheet 1 of 2

FIGURE 3-24. MAIN FUEL SYSTEM

UNCONTROLLED COPY WHEN DOWNLOADED OR PRINTED

Visit www.enstromhelicopter.com for instructions to order an original manual and to register for email notification updates.

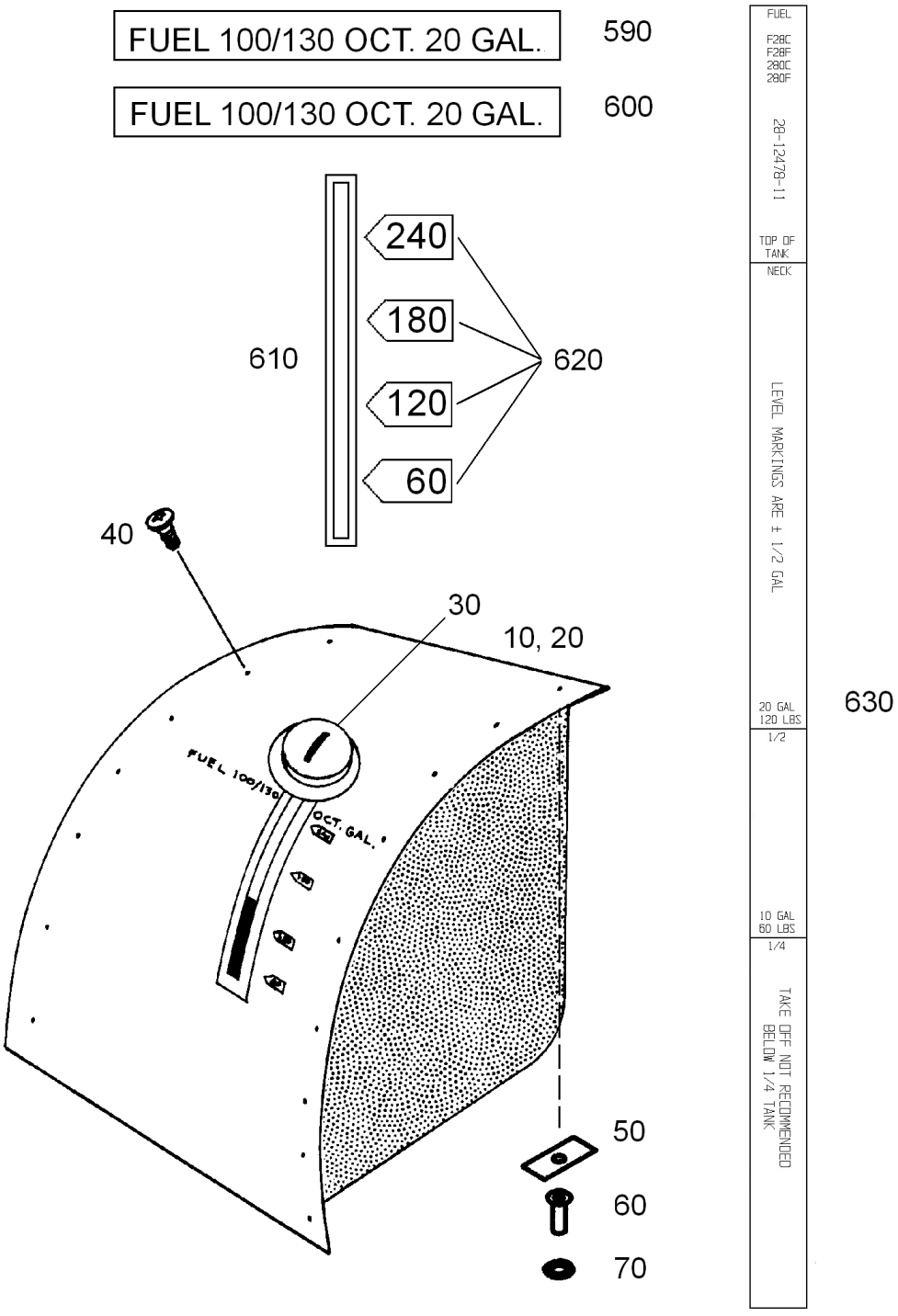

Sheet 2 of 2

FIGURE 3-24. MAIN FUEL SYSTEM

UNCONTROLLED COPY WHEN DOWNLOADED OR PRINTED
Visit www.enstromhelicopter.com for instructions to order an original manual and to register for email notification updates.

FIGURE 3-24. MAIN FUEL SYSTEM

ITEM NUMBER	PART NUMBER	DESCRIPTION	QTY PER ASSY	MODELS AFFECTED						
				F-28A	280	F-28C	280C	F-28F	280F	280FX
10♦♦	280-124301-901	. Fuel Tank Assembly, 20 Gal. (Left Side)	1	X	X	X	X	X	X	X
10	280-124301-1	. Fuel Tank Assembly, 20 Gal. (Left Side) (Superseded by 280-124301-901)	1	X	X	X	X	X	X	X
10	28-12401-1	. Fuel Tank Assembly, 15 Gal. (Left Side) Obsolete	1	X						
11	28-12429-3	. Bag: Scupper, L/H Fuel Tank	1	X	X	X	X	X	X	X
–	280-124301-15	. . Fuel Tank Skin, L/H	1	X	X	X	X	X	X	X
20♦♦	280-124301-902	. Fuel Tank Assembly, 20 Gal. (Right Side)	1	X	X	X	X	X	X	X
20	280-124301-2	. Fuel Tank Assembly, 20 Gal. (Right Side) (Superseded by 280-124301-902)	1	X	X	X	X	X	X	X
20	28-12401-2	. Fuel Tank Assembly, 15 Gal. (Right Side) Obsolete	1	X						
21	28-12429-4	. Bag: Scupper, R/H Fuel Tank	1	X	X	X	X	X	X	X
–	280-124301-16	. . Fuel Tank Skin, R/H	1	X	X	X	X	X	X	X
30	28-12422-1	. . Fuel Cap and Retainer Assy.	1	X	X	X	X	X	X	X
–	28-12421-1	. . . Fuel Cap Retainer	1	X	X	X	X	X	X	X
–	1061	. . . Fuel Cap Gasket	1	X	X	X	X	X	X	X
40	NP525-10R10	. Screw	A/R	X	X	X	X	X	X	X
40	NK525-10R10	. Screw (Superseded by NP525-10R10)	A/R	X	X	X	X	X	X	X
40	NP525-10R12	. Screw	A/R	X	X	X	X	X	X	X
40	NK525-10R12	. Screw (Superseded by NP525-10R12)	A/R	X	X	X	X	X	X	X
50	28-12400-16	. Shim	A/R	X	X	X	X	X	X	X
60	S10P-175	. PlusNut	32	X		X		X		
60	S10P-175	. PlusNut	30		X		X		X	X
60	S10P-320	. PlusNut	2		X		X		X	X
70*	AN936A516	. Lock Washer	14	X	X	X	X	X	X	X
70*	AN936A516	. Lock Washer	14	X	X	X	X	X	X	X
80	AN818-4D	. Nut	2	X	X	X	X	X	X	X

UNCONTROLLED COPY WHEN DOWNLOADED OR PRINTED

Visit www.enstromhelicopter.com for instructions to order an original manual and to register for email notification updates.

FIGURE 3-24. MAIN FUEL SYSTEM

ITEM NUMBER	PART NUMBER	DESCRIPTION	QTY PER ASSY	MODELS AFFECTED						
				F-28A	280	F-28C	280C	F-28F	280F	280FX
–	MS20819-4D	. Sleeve	2	X	X	X	X	X	X	X
90	28-12400-919	. Vent Line	2	X	X	X	X	X	X	X
100	AN824-4D	. Tee	1	X	X	X	X	X	X	X
100	4JBTX-D	. Tee (Superseded by AN824-4D)	1	X	X	X	X	X	X	X
110	28-12440-1	. Upper Vent Line Assembly	1	X	X	X	X	X	X	X
115Δ	MS21919WCJ3	. Clamp	2	X	X	X	X	X	X	X
120	786-4	. Adel Clamp	1	X	X	X	X	X	X	X
120	786-4-CU	. Adel Clamp (Superseded by 786-4)	1	X	X	X	X	X	X	X
–	AN743-13	. Clip	1	X	X	X	X	X	X	X
130	MS35206-245	. Screw	4	X	X	X	X	X	X	X
140Δ	MS35649-282	. Nut	16	X	X	X	X	X	X	X
140Δ	AN340-8	. Nut (Superseded by MS35649-282)	16	X	X	X	X	X	X	X
145Δ	NAS1149FN832P	. Washer	2	X	X	X	X	X	X	X
150Δ	MS35338-42	. Lock Washer	16	X	X	X	X	X	X	X
150Δ	AN935-8	. Lock Washer (Superseded by MS35338-42)	16	X	X	X	X	X	X	X
160	NAS1149FN816P	. Washer	28	X	X	X	X	X	X	X
160	AN960-8L	. Washer (Superseded by NAS1149FN816P)	28	X	X	X	X	X	X	X
170	MS21919WCJ4	. Clamp	5	X	X	X	X	X	X	X
180	AN832-4	. Union	1	X	X	X	X	X	X	X
180	AN832-4D	. Union (Superseded by AN832-4)	1	X	X	X	X	X	X	X
180	4WBTX-S	. Union (Superseded by AN832-4D)	1	X	X	X	X	X	X	X
190	AN924-4	. Nut	3	X	X	X	X	X	X	X
200	NAS1149F0732P	. Washer	6	X	X	X	X	X	X	X
210	28-12438-3	. Lower Vent Line Assembly	1	X	X	X	X	X	X	X
220	MS21919WCJ12	. Clamp	5	X	X	X	X	X	X	X
230	444-4-2-6	. Adel Clamp	3	X	X	X	X	X	X	X
240Δ	MS35206-246	. Screw	10	X	X	X	X	X	X	X

UNCONTROLLED COPY WHEN DOWNLOADED OR PRINTED

Visit www.enstromhelicopter.com for instructions to order an original manual and to register for email notification updates.

FIGURE 3-24. MAIN FUEL SYSTEM

ITEM NUMBER	PART NUMBER	DESCRIPTION	QTY PER ASSY	MODELS AFFECTED						
				F-28A	280	F-28C	280C	F-28F	280F	280FX
240Δ	AN515-8R10	. Screw (Superseded by MS35206-246)	10	X	X	X	X	X	X	X
250	AN525-832R18	. Screw	2	X	X	X	X	X	X	X
260	28-12400-12	. Spacer	2	X	X	X	X	X	X	X
270	AN816-6D	. Union	2	X	X	X	X	X	X	X
270	6-6FBTX-D	. Adapter (Superseded by AN816-6D)	2	X	X	X	X	X	X	X
280	28-12453-1	. Fuel Line (Left Side)	1	X	X	X	X	X	X	X
–	AN743-13	. Clip	1	X	X	X	X	X	X	X
–	MS35206-245	. Screw	1	X	X	X	X	X	X	X
–	NAS1149FN816P	. Washer	1	X	X	X	X	X	X	X
–	MS35338-42	. Lock Washer	1	X	X	X	X	X	X	X
–	MS35649-282	. Nut	1	X	X	X	X	X	X	X
290	28-12452-1	. Fuel Line (Right Side)	1	X	X	X	X	X	X	X
–	AN743-13	. Clip	1	X	X	X	X	X	X	X
–	MS35206-245	. Screw	1	X	X	X	X	X	X	X
–	NAS1149FN816P	. Washer	1	X	X	X	X	X	X	X
–	MS35338-42	. Lock Washer	1	X	X	X	X	X	X	X
–	MS35649-282	. Nut	1	X	X	X	X	X	X	X
300	MS21919WCJ6	. Clamp	2	X	X	X	X	X	X	X
310Δ	MS21919WCJ14	. Clamp	3	X	X	X	X	X	X	X
320	AN743-13	. Clip	2	X	X	X	X	X	X	X
330	28-12458-1	. Drain Line, Scupper Right	1	X	X	X	X	X	X	X
330**	28-12439-1	. Drain Line (Superseded by 28-12458-1)	1	X	X	X	X			
340	28-12460-1	. Valve Assembly (Spring loaded flip open)	2	X	X	X	X	X	X	X
340	K-9000S-1A	. Valve - Spring loaded twist open (Superseded by 28-12460-1)	2	X	X	X	X			
350**	MS20812-4D	. Elbow (Left Side)	1	X	X	X	X			
350**	AN823-4D	. Elbow (Left Side) (Superseded by MS20812-4D)	1	X	X	X	X			

UNCONTROLLED COPY WHEN DOWNLOADED OR PRINTED

Visit www.enstromhelicopter.com for instructions to order an original manual and to register for email notification updates.

FIGURE 3-24. MAIN FUEL SYSTEM

ITEM NUMBER	PART NUMBER	DESCRIPTION	QTY PER ASSY	MODELS AFFECTED						
				F-28A	280	F-28C	280C	F-28F	280F	280FX
350**	AN816-4D	. Adapter (Right Side)	1	X	X	X	X			
350	AN822-4D	. Elbow	2	X	X	X	X	X	X	X
360	AN911-1D	. Nipple	2	X	X	X	X	X	X	X
360	AN911-4D	. Nipple (Superseded by AN911-1D)	2	X	X	X	X	X	X	X
370	28-12459-1	. Drain Line, Right	1	X	X	X	X	X	X	X
370**	28-12451-1	. Drain Line (Obsolete)	1	X	X	X	X			
380	AN834-4	. Tee	2	X	X	X	X	X	X	X
380	AN834-4D	. Tee (Alternate)	2	X	X	X	X	X	X	X
390	28-12441-3	. Fuel Tank RH Drain Line Assembly	1	X	X	X	X	X	X	X
–	MS35489-14	. Grommet	1	X	X	X	X	X	X	X
400**	28-12436-1	. Drain Line (Obsolete)	1	X	X	X	X			
400	28-12456-1	. Drain Line, Scupper Left	1	X	X	X	X	X	X	X
410**	28-12436-1	. Drain Line (Obsolete)	1	X	X	X	X			
410	28-12457-1	. Drain Line, Left	1	X	X	X	X	X	X	X
420	28-12437-3	. Fuel Tank LH Drain Line Assembly	1	X	X	X	X	X	X	X
–	MS35489-10	. Grommet	1	X	X	X	X	X	X	X
430	64-632-74	. Fuel Shutoff Cable	1	X	X	X	X	X	X	X
–♦	MS21919WDG3	. Clamp	4	X	X	X	X	X	X	X
–♦	MS21919WDG12	. Clamp	4	X	X	X	X	X	X	X
–♦	MS35206-245	. Screw	4	X	X	X	X	X	X	X
–♦	NAS1149FN816P	. Washer	8	X	X	X	X	X	X	X
–♦	MS35338-42	. Lock Washer	4	X	X	X	X	X	X	X
–♦	MS35649-282	. Nut	4	X	X	X	X	X	X	X
440	ECD093-11	. Stop Nut	1	X	X	X	X	X	X	X
450	1/8X8-32	. Set Screw	1	X	X	X	X	X	X	X
460	AN316-12R	. Nut	1	X	X	X	X	X	X	X
460	AN316-12	. Nut (Superseded by AN316-12R)	1	X	X	X	X	X	X	X

UNCONTROLLED COPY WHEN DOWNLOADED OR PRINTED

Visit www.enstromhelicopter.com for instructions to order an original manual and to register for email notification updates.

FIGURE 3-24. MAIN FUEL SYSTEM

ITEM NUMBER	PART NUMBER	DESCRIPTION	QTY PER ASSY	MODELS AFFECTED						
				F-28A	280	F-28C	280C	F-28F	280F	280FX
470	28-12416-4	. Plate	1	X	X	X	X	X	X	X
480	28-12416-3	. Placard Fuel Shutoff	1	X	X	X	X	X	X	X
490	280-124001-1	. Fuel Shutoff Valve Assembly (See Fig. 3-25 for breakdown)	1	X	X	X	X	X	X	X
500†	28-12418-1	. Control Handle, Drain	1	X	X	X	X	X	X	X
510†	AN931-4-16	. Grommet	1	X	X	X	X	X	X	X
520†	28-12419-1	. Sleeve	1	X	X	X	X	X	X	X
530†	MS24665-153	. Cotter Pin	1	X	X	X	X	X	X	X
530†	AN381-2-12	. Cotter Pin (Superseded by MS24665-153)	1	X	X	X	X	X	X	X
540†	NAS1149F0332P	. Washer	1	X	X	X	X	X	X	X
540†	AN960-10L	. Washer (Superseded by NAS1149F0332P)	1	X	X	X	X	X	X	X
550†	62	. Cowling Lock Pin	1	X	X	X	X	X	X	X
560†	28-12420-15	. Placard, Fuel Sump Drain	1	X	X	X	X	X	X	X
570†	28-12420-13	. Placard, Open Fuel	1	X	X	X	X	X	X	X
580†	28-12420-11	. Placard, Closed Fuel	1	X	X	X	X	X	X	X
590	28-12450-11	. Placard Red (Obsolete)	2	X						
590	28-12450-13	. Placard White (Obsolete)	2	X						
600	28-12433-1	. Placard (Red), 20 Gallon	2	X	X	X	X	X	X	X
600	28-12433-2	. Placard (White), Fuel Cap	2	X	X	X	X	X	X	X
610‡	28-12424-1	. Placard, Sight Gauge	2	X	X	X	X	X	X	
620‡	28-12465-1	. Placard, Fuel Tank Capacity	2	X	X	X	X	X	X	
630	28-12478-11	. Stick: Fuel Quantity	1	X	X	X	X	X	X	X

* Used with the PlusNuts in the aft cowl ring.

** Used with valve, P/N K-9000S-1A.

† Used on F-28F, S/N 746 and prior; 280FX, S/N 2012 and prior.

‡ Used with 20 Gal. Tanks. Sight window no longer manufactured after April, 1984.

Δ This location is for R.H. pilot command only; remove one piece of hardware.

♦ Secures fuel shutoff cable to pylon.

▌ ♦♦ Includes Item 340.

UNCONTROLLED COPY WHEN DOWNLOADED OR PRINTED

Visit www.enstromhelicopter.com for instructions to order an original manual and to register for email notification updates.

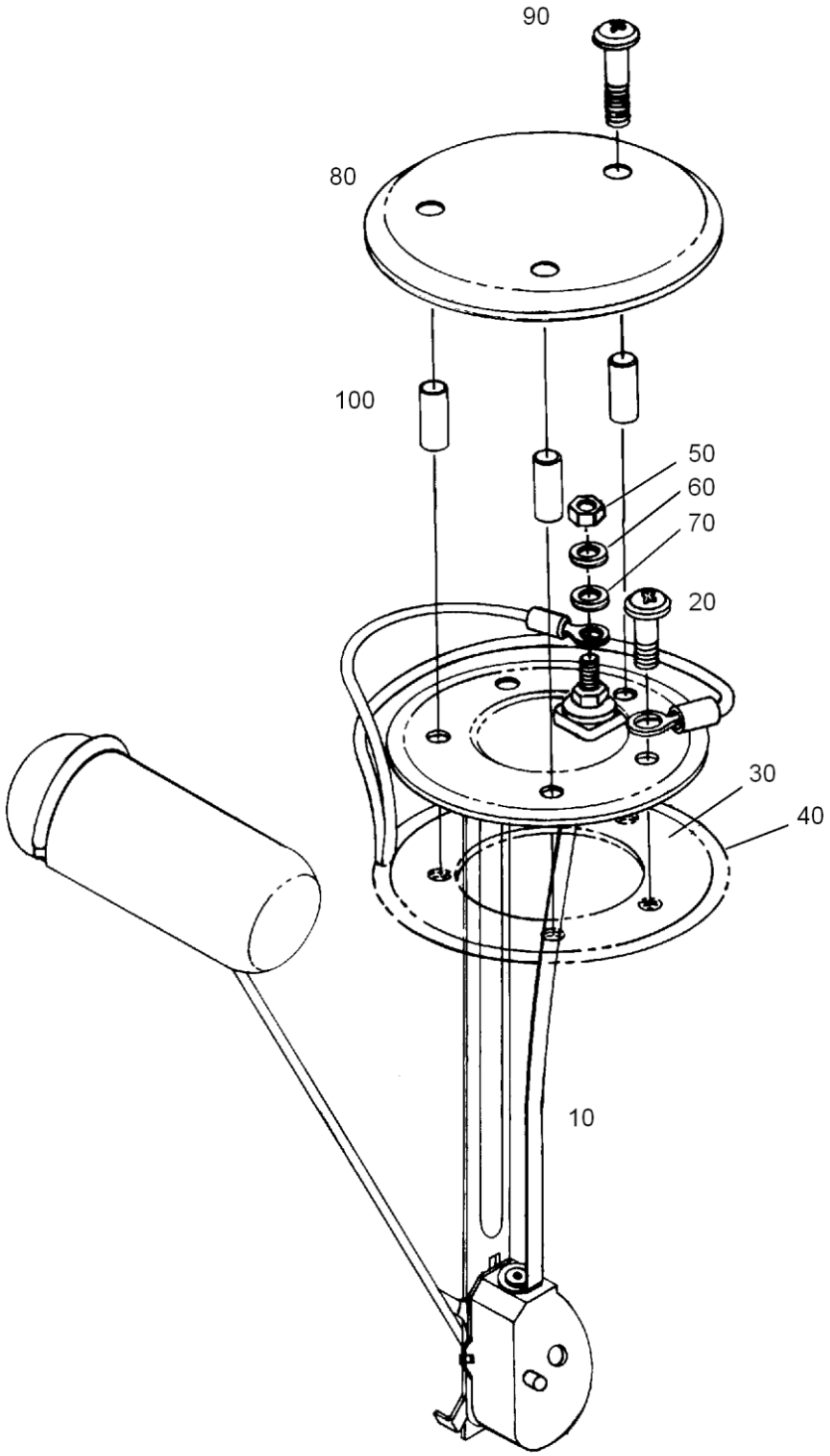

FIGURE 3-25. FUEL LEVEL SENDING UNIT

UNCONTROLLED COPY WHEN DOWNLOADED OR PRINTED

Visit www.enstromhelicopter.com for instructions to order an original manual and to register for email notification updates.

FIGURE 3-25. FUEL LEVEL SENDING UNIT

ITEM NUMBER	PART NUMBER	DESCRIPTION	QTY PER ASSY	MODELS AFFECTED						
				F-28A	280	-F28C	280C	F-28F	280F	280FX
10*	ECD088-15	. Fuel Level Sending Unit - 40 Gal. Capacity	1	X	X	X	X	X	X	X
10	ECD088-11	. Fuel Level Sending Unit - 30 Gal. Capacity	1	X						
10	ECD088-13	. Fuel Level Sending Unit - 40 Gal. Capacity (Superseded by ECD088-15)	1	X	X	X	X	X	X	X
20	AN525-832R8	. Screw	2	X	X	X	X	X	X	X
30	28-12409-1	. Gasket	1	X	X	X	X	X	X	X
40**	28-12408-1	. Backing Plate	1	X	X	X	X	X	X	X
50	AN345-10	. Nut	1	X	X	X	X	X	X	X
60	MS35338-43	. Lock Washer	1	X	X	X	X	X	X	X
60	AN935-10L	. Lock Washer (Superseded by MS35338-43)	1	X	X	X	X	X	X	X
70	NAS1149F0332P	. Washer	1	X	X	X	X	X	X	X
70	AN960-10L	. Washer (Superseded by NAS1149F0332P)	1	X	X	X	X	X	X	X
80	28-12411-3	. Cover	1	X	X	X	X	X	X	X
90	AN525-832R22	. Screw	3	X	X	X	X	X	X	X
100	28-12410-1	. Spacer	3	X	X	X	X	X	X	X

* Can be used on all models. Effectivity F28F S/N 830 and subsequent. Retrofittable to F28A S/N 001, F28C S/N 331, F28F S/N 509. Effectivity 280FX S/N 2136 and subsequent. Retrofittable to 280 S/N 1001, 280C S/N 1025, 280F S/N 1500 and 280FX S/N 2001.

** Bonded to the fuel cell.

UNCONTROLLED COPY WHEN DOWNLOADED OR PRINTED

Visit www.enstromhelicopter.com for instructions to order an original manual and to register for email notification updates.

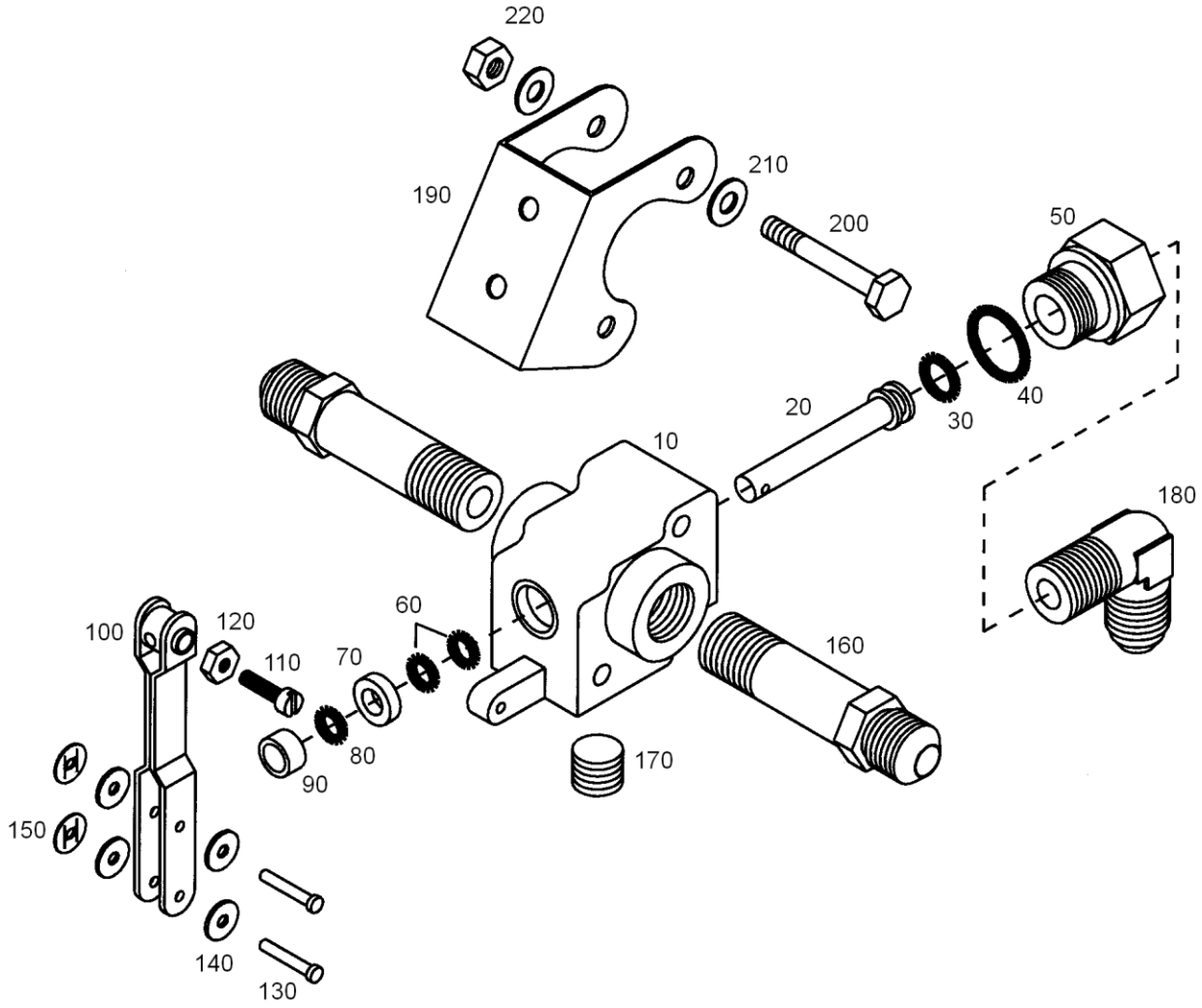

FIGURE 3-26. FUEL SHUTOFF VALVE ASSEMBLY

UNCONTROLLED COPY WHEN DOWNLOADED OR PRINTED

Visit www.enstromhelicopter.com for instructions to order an original manual and to register for email notification updates.

FIGURE 3-26. FUEL SHUTOFF VALVE ASSEMBLY

ITEM NUMBER	PART NUMBER	DESCRIPTION	QTY PER ASSY	MODELS AFFECTED						
				F-28A	280	F-28C	280C	F-28F	280F	280FX
–	280-124001-1	. Fuel Shutoff Valve Assembly	1	X	X	X	X	X	X	X
–	4600-00	. . Fuel Shutoff Valve	1	X	X	X	X	X	X	X
10	4232	. . . Body Assembly	1	X	X	X	X	X	X	X
20	4234	. . . Valve Stem	1	X	X	X	X	X	X	X
30	M83248-2-010	. . . O-Ring	1	X	X	X	X	X	X	X
40	MS29513-113	. . . O-Ring	1	X	X	X	X	X	X	X
50	10005498	. . . Valve Seat	1	X	X	X	X	X	X	X
50	4235	. . . Valve Seat (Superseded by 10005498)	1	X	X	X	X	X	X	X
60	MS29513-010	. . . O-Ring	2	X	X	X	X	X	X	X
70	4241	. . . Washer	1	X	X	X	X	X	X	X
80	MS28778-2	. . O-Ring	1	X	X	X	X	X	X	X
80	2-010	. . O-Ring (Equivalent to MS28778-2)	1	X	X	X	X	X	X	X
80	NAS1611-010	. . O-Ring (Superseded by 2-010)	1	X	X	X	X	X	X	X
90	4503	. . Spacer	1	X	X	X	X	X	X	X
100	4208-00	. . Arm Assembly	1	X	X	X	X	X	X	X
110	MS35206-230	. . . Screw	1	X	X	X	X	X	X	X
110	AN515-6R8	. . . Screw (Superseded by MS35206-230)	1	X	X	X	X	X	X	X
110	AN500-6-8	. . . Screw	1	X	X	X	X	X	X	X
120	MS35649-262	. . . Nut	1	X	X	X	X	X	X	X
120	AN340-6	. . . Nut (Superseded by MS35649-262)	1	X	X	X	X	X	X	X
130	MS20615-3M10	. . Rivet	2	X	X	X	X	X	X	X
130	18286-00	. . Rivet (Superseded by MS20615-3M10)	2	X	X	X	X	X	X	X
140	NAS1149FN316P	. . Washer	4	X	X	X	X	X	X	X
140	4222	. . Washer (Superseded by NAS1149FN316P)	4	X	X	X	X	X	X	X
150	PS094032PG	. . Push Nut	2	X	X	X	X	X	X	X
150	18207	. . Nut, Tinnerman (Superseded by PS094032PG)	2	X	X	X	X	X	X	X

UNCONTROLLED COPY WHEN DOWNLOADED OR PRINTED

Visit www.enstromhelicopter.com for instructions to order an original manual and to register for email notification updates.

FIGURE 3-26. FUEL SHUTOFF VALVE ASSEMBLY

ITEM NUMBER	PART NUMBER	DESCRIPTION	QTY PER ASSY	MODELS AFFECTED						
				F-28A	280	F-28C	280C	F-28F	280F	280FX
150	183204	. . Nut, Tinnerman (Superseded by 18207)	2	X	X	X	X	X	X	X
160	28-12417-1	. . Valve Adapter	2	X	X	X	X	X	X	X
170	AN932-D3	. . Plug	1	X	X	X	X	X	X	X
180	MS20822-6D	. . Elbow	1	X	X	X	X	X	X	X
180	AN822-6D	. . Elbow (Superseded by MS20822-6D)	1	X	X	X	X	X	X	X
190	280-124001-3	. . Bracket Assembly	1	X	X	X	X	X	X	X
–	NAJ1-02	. . . Nut Plate	2	X	X	X	X	X	X	X
–	MS20426AD3-3	. . . Rivet	4	X	X	X	X	X	X	X
200	NAS6603-16	. . Bolt	2	X	X	X	X	X	X	X
200	AN3-13A	. . Bolt (Superseded by NAS6603-16)	2	X	X	X	X	X	X	X
210	NAS1149D0316H	. . Washer	4	X	X	X	X	X	X	X
210	AN960D10L	. . Washer (Superseded by NAS1149D0316H)	4	X	X	X	X	X	X	X
220	MS21083N3	. . Nut	2	X	X	X	X	X	X	X
220	AN364-1032A	. . Nut (Superseded by MS21083N3)	2	X	X	X	X	X	X	X
–	MS20995-C32	. Wire: Safety	A/R	X	X	X	X	X	X	X

UNCONTROLLED COPY WHEN DOWNLOADED OR PRINTED

Visit www.enstromhelicopter.com for instructions to order an original manual and to register for email notification updates.

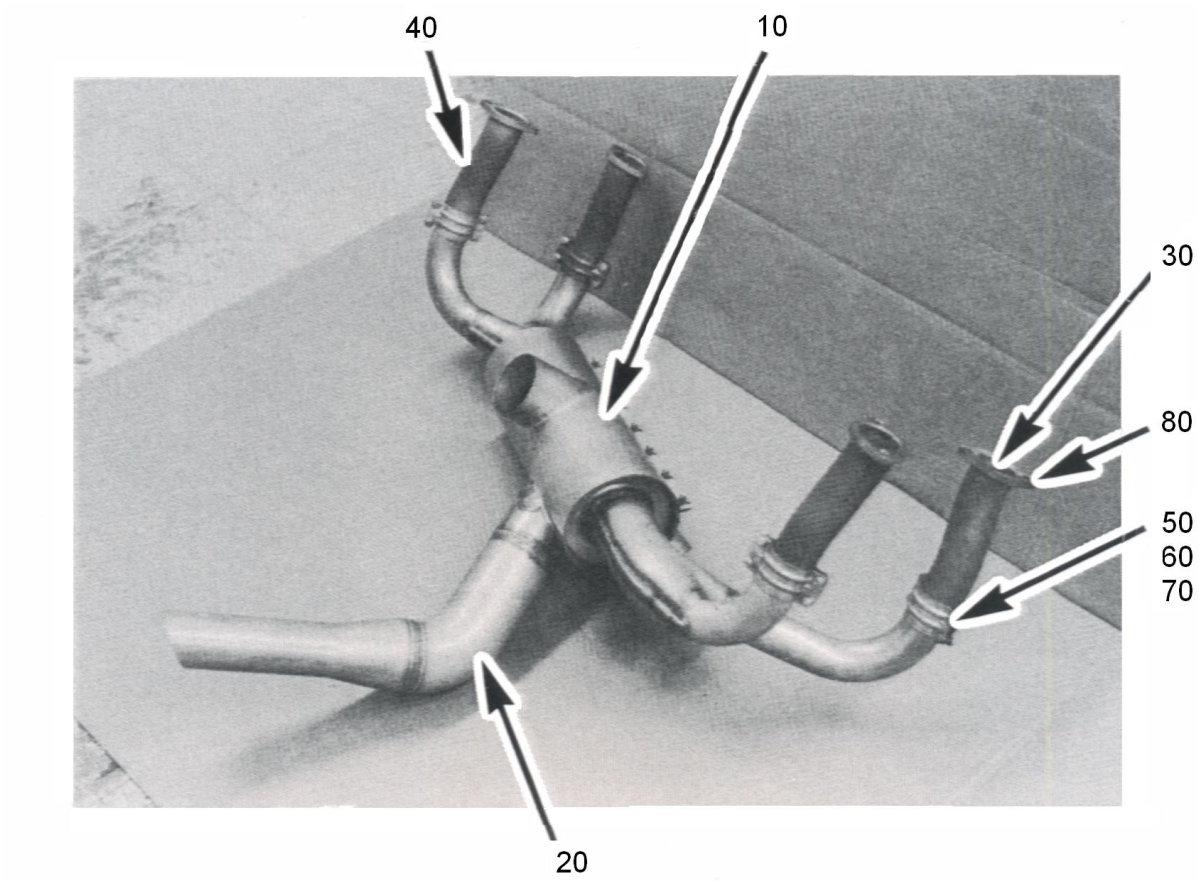

FIGURE 3-27. EXHAUST SYSTEM INSTALLATION (A MODELS)

UNCONTROLLED COPY WHEN DOWNLOADED OR PRINTED

Visit www.enstromhelicopter.com for instructions to order an original manual and to register for email notification updates.

FIGURE 3-27. EXHAUST SYSTEM INSTALLATION (A MODELS)

ITEM NUMBER	PART NUMBER	DESCRIPTION	QTY PER ASSY	MODELS AFFECTED						
				F-28A	280	F-28C	280C	F-28F	280F	280FX
–	28-12500-1	. Exhaust System	1	X						
10	099001-176	. . Shroud Assembly (Obsolete)	1	X	X					
–	C6052-8Z-1	. . . Tinnerman Nut	7	X	X					
–	MS51861-35	. . . Screw	7	X	X					
–	AN530C8-8	. . . Screw (Superseded by MS51861-35)	7	X	X					
20	099001-174	. . Muffler Assembly (Obsolete)	1	X	X					
30	099001-177	. . Exhaust Riser, R/H	2	X	X					
40	099001-178	. . Exhaust Riser, L/H	2	X	X					
50	EL-099005-401	. . Clamp Half	8	X	X					
50	099005-401	. . Clamp Half (Superseded by EL-099005-401)	8	X	X					
60	AN3C4A	. . Bolt	16	X	X					
70	MS21042-3	. . Nut	16	X	X					
70	AN365-1032C	. . Nut (Superseded by MS21042-3)	16	X	X					
80*	75118	. Gasket Flange Exhaust (Not Shown)	8	X	X					
80*	77611	. Gasket (Not Shown) Alternate	4	X	X					
–*	STD-35	. Washer	8	X	X					
–*	STD-475	. Lock Washer	8	X	X					
–*	STD-1410	. Nut	8	X	X					

* Obtain from Lycoming distributor.

UNCONTROLLED COPY WHEN DOWNLOADED OR PRINTED

Visit www.enstromhelicopter.com for instructions to order an original manual and to register for email notification updates.

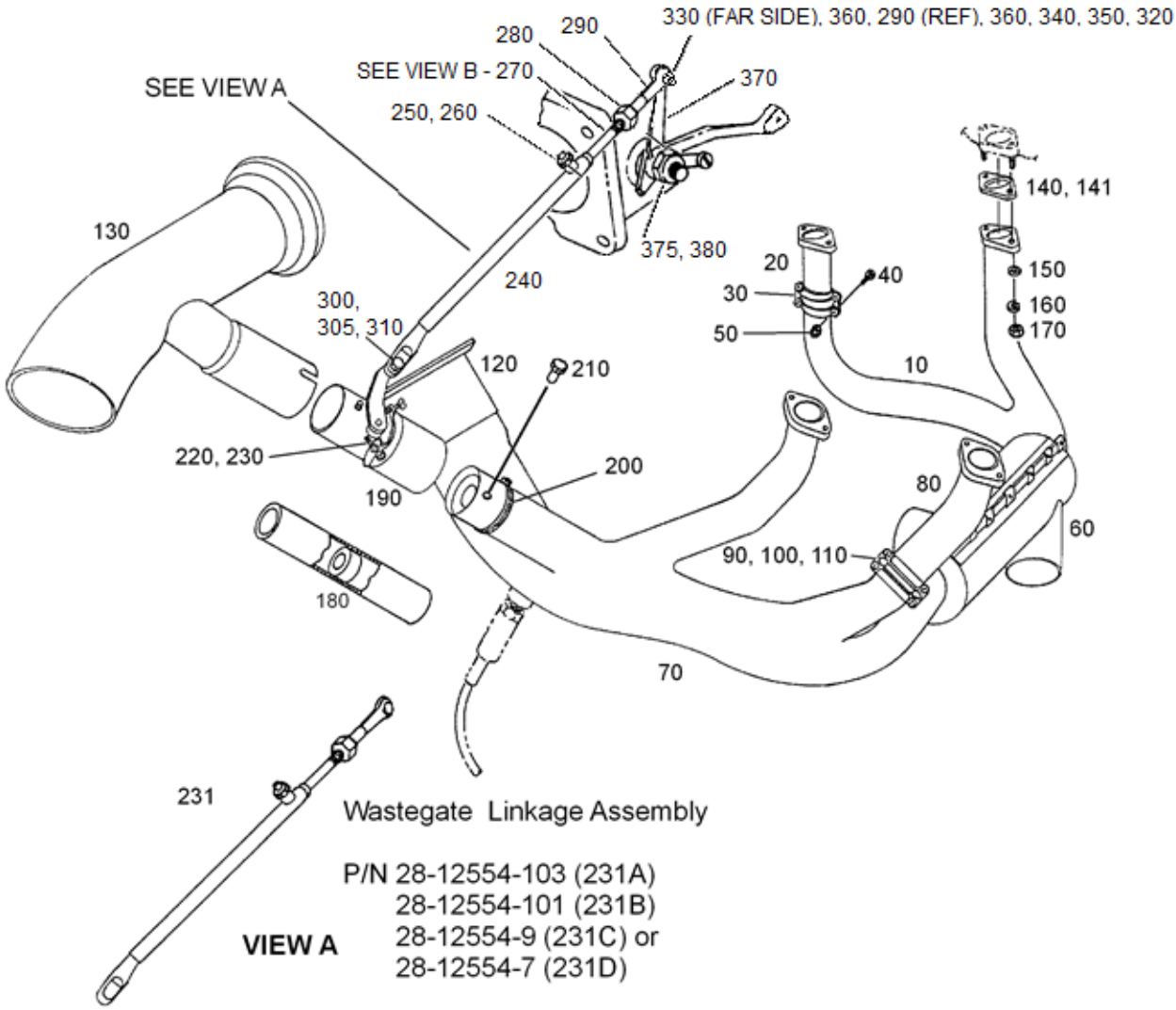

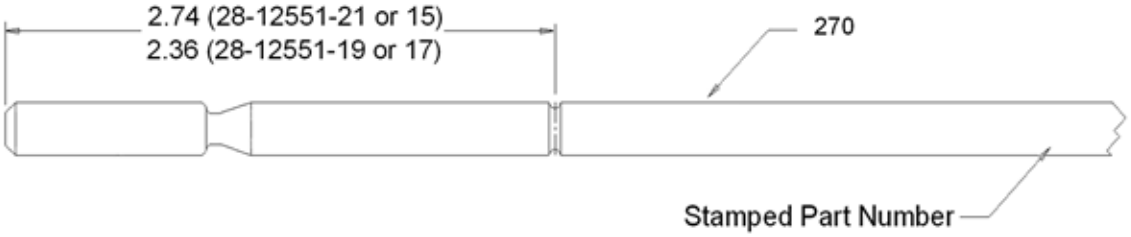

Measure to Determine Part Number for Wastegate Linkage Rod

VIEW B

FIGURE 3-28. EXHAUST SYSTEM INSTALLATION (C, F MODELS)

UNCONTROLLED COPY WHEN DOWNLOADED OR PRINTED

Visit www.enstromhelicopter.com for instructions to order an original manual and to register for email notification updates.

FIGURE 3-28. EXHAUST SYSTEM INSTALLATION (C, F MODELS)

ITEM NUMBER	PART NUMBER	DESCRIPTION	QTY PER ASSY	MODELS AFFECTED						
				F-28A	280	F-28C	280C	F-28F	280F	280FX
–	037360-004	. Exhaust System	1			X	X	X	X	X
10	EL-037360-107	. . Exhaust Riser, #2	1			X	X	X	X	X
20	EL-037360-202	. . Exhaust Riser, #4	1			X	X	X	X	X
30	EL-099005-401	. . Clamp Half	2			X	X	X	X	X
30	EL-037360-401	. . Clamp Half (Superseded by EL-099005-401)	2			X	X	X	X	X
40	AN3C4A	. . Bolt	4			X	X	X	X	X
50	MS21042-3	. . Nut	4			X	X	X	X	X
50	AN365-1032C	. . Nut (Superseded by MS21042-3)	4			X	X	X	X	X
60	EL-037360-113	. . Shroud Assembly	1			X	X	X	X	X
–	C-6352-10Z	. . . Tinnerman Nut	6			X	X	X	X	X
–	MS51861-35	. . . Screw	6			X	X	X	X	X
–	AN530C10-8	. . . Screw	6			X	X	X	X	X
–	037360-124	. . Collector Assembly	1					X	X	X
70	EL-037360-110	. . . Collector, Left Side	1			X	X			
▌ 70	EL-037360-111	. . . Collector, Left Side	1					X	X	X
▌ 80	EL-037360-206	. . . Exhaust Riser, #1	1			X	X	X	X	X
▌ 90	EL-099005-401	. . . Clamp Half	2			X	X	X	X	X
90	EL-037360-401	. . . Clamp Half (Superseded by EL-099005-401)	2			X	X			
100	AN3C4A	. . Bolt	4			X	X			
100	AN3C4A	. . Bolt	4					X	X	X
110	MS21042-3	. . Nut	4			X	X			
110	AN365-1032C	. . Nut (Superseded by MS21042-3)	4			X	X			
110	MS21042-3	. . Nut	4					X	X	X
110	AN365-1032C	. . Nut (Superseded by MS21042-3)	4					X	X	X
120	EL-037360-112	. . Turbo Inlet	1			X	X			
120	EL-037360-112	. . Turbo Inlet	1					X	X	X
130	EL-037360-116	. . Tail Pipe Assembly	1			X	X			

UNCONTROLLED COPY WHEN DOWNLOADED OR PRINTED

Visit www.enstromhelicopter.com for instructions to order an original manual and to register for email notification updates.

FIGURE 3-28. EXHAUST SYSTEM INSTALLATION (C, F MODELS)

ITEM NUMBER	PART NUMBER	DESCRIPTION	QTY PER ASSY	MODELS AFFECTED						
				F-28A	280	F-28C	280C	F-28F	280F	280FX
130	EL-037360-123	. . Tail Pipe Assembly	1					X	X	X
130	28-12577-1	. Muffler Assembly (Optional)	1					X	X	X
130	ENX-0001	. Muffler Assembly (Optional) Superseded by 28-12577-1	1					X	X	X
140*	77611	. Gasket Exhaust Flange	4			X	X	X	X	X
141*	LW-16567	. Gasket, Thin	A/R			X	X	X	X	X
150*	STD-35	. Washer	8			X	X	X	X	X
160/170*	STD-2233	. Lock Washer	8			X	X	X	X	X
160*	STD-475	. Lock Washer (#160 and #170 replaced by STD-2233 Locknut)	8			X	X	X	X	X
170*	STD-1410	. Nut (#160 and #170 replaced by STD-2233 Locknut)	8			X	X	X	X	X
180	28-125017-1	. . Orifice Bypass Tube Assembly	1			X	X			
–	28-125000-11	. . Tube, Bypass	1			X	X			
–	28-125016-11	. . Orifice	1			X	X			
180	28-12544-3	. . Bypass Tube Sub-Assembly (Used with 28-12552-3)	1					X	X	X
190	28-12552-3	. Waste Gate Assembly, With Alignment Pins	1			X	X	X		
190	28-12552-5	. Waste Gate Assembly, Without Alignment Pins (Superseded by 28-12552-3)	1			X	X	X		
200	QS100-M28	. Clamp (Used with 28-12552-5)	1					X	X	X
210	28-12574-11	. Pin (Used with 28-12552-3)	1					X	X	X
220	NAS428-3A10	. Bolt	2					X	X	X
220	AN502-10-14	. Screw (Superseded by NAS428-3A10)	2					X	X	X
230	AN315-3R	. Nut	4					X	X	X
231A‡	28-12554-103	. Linkage Assembly-Wastegate	1					X	X	X
240	28-12555-7	. . Sleeve Assembly	1					X	X	X
250	K3N	. . Plunger: Ball, 1/4-20 Stubby	1					X	X	X
260	28-12560-1	. . Nut	1					X	X	X

Visit www.enstromhelicopter.com for instructions to order an original manual and to register for email notification updates.

FIGURE 3-28. EXHAUST SYSTEM INSTALLATION (C, F MODELS)

ITEM NUMBER	PART NUMBER	DESCRIPTION	QTY PER ASSY	MODELS AFFECTED						
				F-28A	280	F-28C	280C	F-28F	280F	280FX
270●	28-12551-21	. . Rod Linkage Wastegate, Long with .250" Diameter Rod	1					X	X	X
280	AN315-3R	. . Nut, Hex, 10-32	1					X	X	X
290	HFVV3M	. . Bearing, Rod-End, 3/16" RH	1					X	X	X
231B‡	28-12554-101	. Linkage Assembly Wastegate (Alternate to 28-12554-103)	1					X	X	X
240	28-12555-7	. . Sleeve Assembly	1					X	X	X
250	K3N	. . Plunger: Ball, 1/4-20 Stubby	1					X	X	X
260	28-12560-1	. . Nut	1					X	X	X
270●	28-12551-19	. . Rod Linkage Wastegate, Short with .250" Diameter Rod	1					X	X	X
280	AN315-3R	. . Nut, Hex, 10-32	1					X	X	X
290	HFVV3M	. . Bearing, Rod-End, 3/16" RH	1					X	X	X
231C	28-12554-9	. Linkage Assembly-Wastegate (Superseded by 28-12554-7)	1					X	X	X
240	28-12555-7	. . Sleeve Assembly	1					X	X	X
250	K3N	. . Plunger: Ball, 1/4-20 Stubby	1					X	X	X
260	28-12560-1	. . Nut	1					X	X	X
270●	28-12551-21	. . Rod Linkage, Long with .250 Diameter Rod	1					X	X	X
270●	28-12551-17	. . Rod Linkage, Short, with .250 Diameter Rod (Superseded by 28-12551-21)	1					X	X	X
280	AN315-3R	. . Nut, Hex, 10-32	1					X	X	X
290	HFVV3M	. . Bearing, Rod-End, 3/16" RH	1					X	X	X
231D	28-12554-7	. Linkage Assembly Wastegate (Superseded by 28-12554-101)	1					X	X	X
240	28-12555-7	. . Sleeve Assembly – Fits .250 Diameter Rod	1					X	X	X
240A**	28-12555-1	. . Sleeve Assembly – Fits .290 Diameter Rod	1					X	X	
250	K3N	. . Plunger: Ball, 1/4-20 Stubby	1					X	X	X
260	28-12560-1	. . Nut	1					X	X	X

UNCONTROLLED COPY WHEN DOWNLOADED OR PRINTED

Visit www.enstromhelicopter.com for instructions to order an original manual and to register for email notification updates.

FIGURE 3-28. EXHAUST SYSTEM INSTALLATION (C, F MODELS)

ITEM NUMBER	PART NUMBER	DESCRIPTION	QTY PER ASSY	MODELS AFFECTED						
				F-28A	280	F-28C	280C	F-28F	280F	280FX
270●	28-12551-15	. . Rod Linkage Wastegate, Long with 0.250” Diameter Rod (Superseded by 28-12551-19)	1					X	X	X
270A**●	28-12551-13	. . Rod Linkage Wastegate, 0.290” Diameter Rod (Used with 28-12555-1 Tube Assembly)	1					X	X	
280	AN315-3R	. . Nut, Hex, 10-32	1					X	X	X
290	HFVV3M	. . Bearing, Rod-End, 3/16" RH	1					X	X	X
300	MS20392-2C11	. Clevis Pin	1					X	X	X
305	MS24665-153	. Cotter Pin	1					X	X	X
300	AN393-11	. Clevis Pin (Superseded by MS20392-2C11)	1					X	X	X
310	AN960-10L	. Washer	1					X	X	X
320	MS24665-300	. Cotter Pin	1					X	X	X
320	AN381-2-8	. Cotter Pin (Replaced by MS24665-300)	1					X	X	X
330	AN3-11	. Bolt	1					X	X	X
–	MS20995C32	. Safety Wire	A/R					X	X	X
340	NAS1149F0363P	. Washer	2					X	X	X
350	F12NE4753-02	. Nut	1					X	X	X
360	NAS73-3E002	. Bushing	2					X	X	X
370	28-12570-3	. Bellcrank	1					X	X	X
375	MS246665-90	. Cotter Pin	1					X	X	X
380	AN310-5	. Nut	1					X	X	X

* Obtain from Lycoming distributor.

** Used on helicopters manufactured on or before 1985.

‡ Used on helicopters manufactured after 1985.

● See Figure 3-28 View B to determine the correct part number.

UNCONTROLLED COPY WHEN DOWNLOADED OR PRINTED

Visit www.enstromhelicopter.com for instructions to order an original manual and to register for email notification updates.

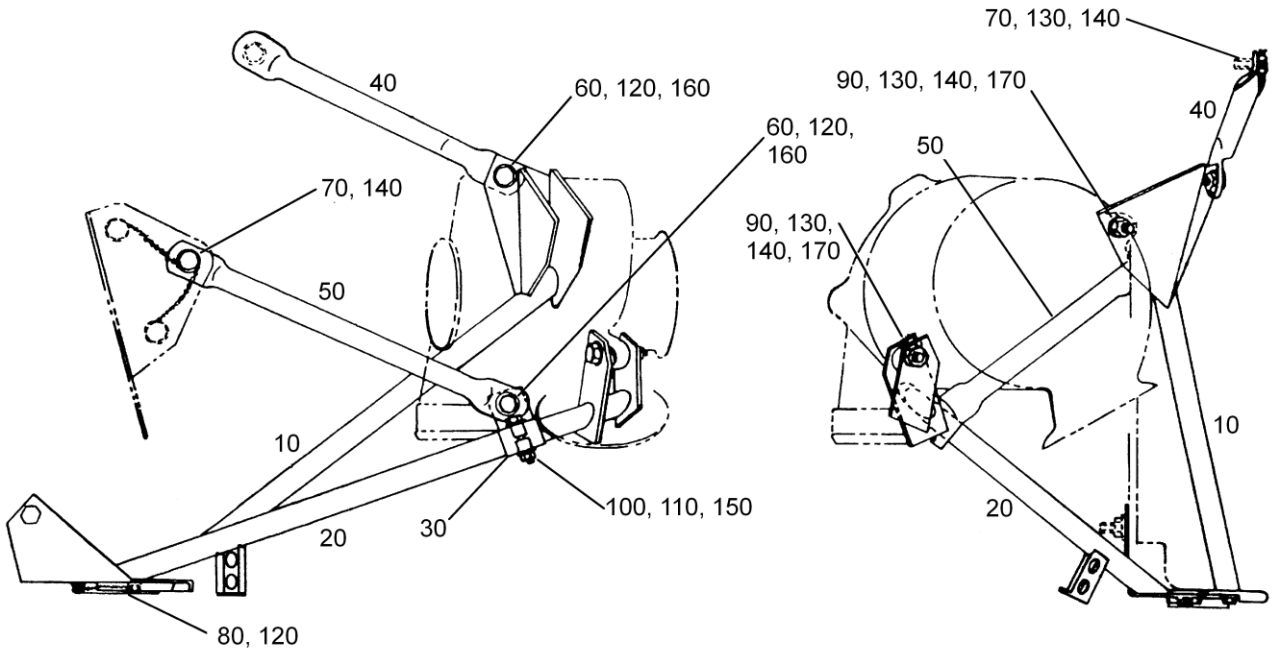

FIGURE 3-29. TURBOCHARGER MOUNT INSTALLATION

UNCONTROLLED COPY WHEN DOWNLOADED OR PRINTED

Visit www.enstromhelicopter.com for instructions to order an original manual and to register for email notification updates.

FIGURE 3-29. TURBOCHARGER MOUNT INSTALLATION

ITEM NUMBER	PART NUMBER	DESCRIPTION	QTY PER ASSY	MODELS AFFECTED						
				F-28A	280	F-28C	280C	F-28F	280F	280FX
10	28-125011-1	. Tube Assembly	1			X	X	X	X	X
20*	28-125082-3	. Bracket Assembly	1			X	X	X	X	X
20	28-125082-1	. Bracket Assembly (Superseded by 28-125082-3)	1			X	X	X	X	X
30	28-125011-5	. . Clamp Assembly	1			X	X	X	X	X
40	28-125011-31	. Tube Assembly Mount	1			X	X	X	X	X
50	28-125011-49	. Tube Assembly Mount (Used with 28-125082-3)	1			X	X	X	X	X
50	28-125011-33	. Tube Assembly Mount (Alternate)	1			X	X	X	X	X
60	AN4C5A	. Bolt	2			X	X	X	X	X
70	MS20074-05-05	. Bolt	2			X	X	X	X	X
70	AN75A5	. Bolt (Superseded by MS20074-05-05)	2			X	X	X	X	X
80	AN74A4	. Bolt	2			X	X	X	X	X
90	AN5C13A	. Bolt	2			X	X	X	X	X
100	AN3C10A	. Bolt	1			X	X	X	X	X
110	NAS1149C0363R	. Washer	2			X	X	X	X	X
110	AN960C10	. Washer (Superseded by NAS1149C0363R)	2			X	X	X	X	X
120	NAS1149F0432P	. Washer	4			X	X	X	X	X
120	AN960-416L	. Washer (Superseded by NAS1149F0432P)	4			X	X	X	X	X
130	NAS1149F0532P	. Washer	A/R			X	X	X	X	X
130	AN960-516L	. Washer (Superseded by NAS1149F0532P)	A/R			X	X	X	X	X
140	NAS1149C0563R	. Washer	A/R			X	X	X	X	X
140	AN960C516	. Washer (Superseded by NAS1149C0563R)	A/R			X	X	X	X	X
150	MS20500-1032	. Nut	1			X	X	X	X	X
160	MS20500-428	. Nut	2			X	X	X	X	X
170	MS20500-524	. Nut	2			X	X	X	X	X

UNCONTROLLED COPY WHEN DOWNLOADED OR PRINTED

Visit www.enstromhelicopter.com for instructions to order an original manual and to register for email notification updates.

* Effective: F-28F S/N 832 and subsequent; 280FX S/N 2147 and subsequent.
Eligible: F-28C all S/N; 280C all S/N; F-28F S/N 509 and subsequent; 280FX S/N 2001 and subsequent if bracket P/N 28-125082-3 is installed (replacing P/N 28-125082-1).Refer to Figure 3-8 for adapter/fitting requirements (Item 65).

UNCONTROLLED COPY WHEN DOWNLOADED OR PRINTED
Visit www.enstromhelicopter.com for instructions to order an original manual and to register for email notification updates.

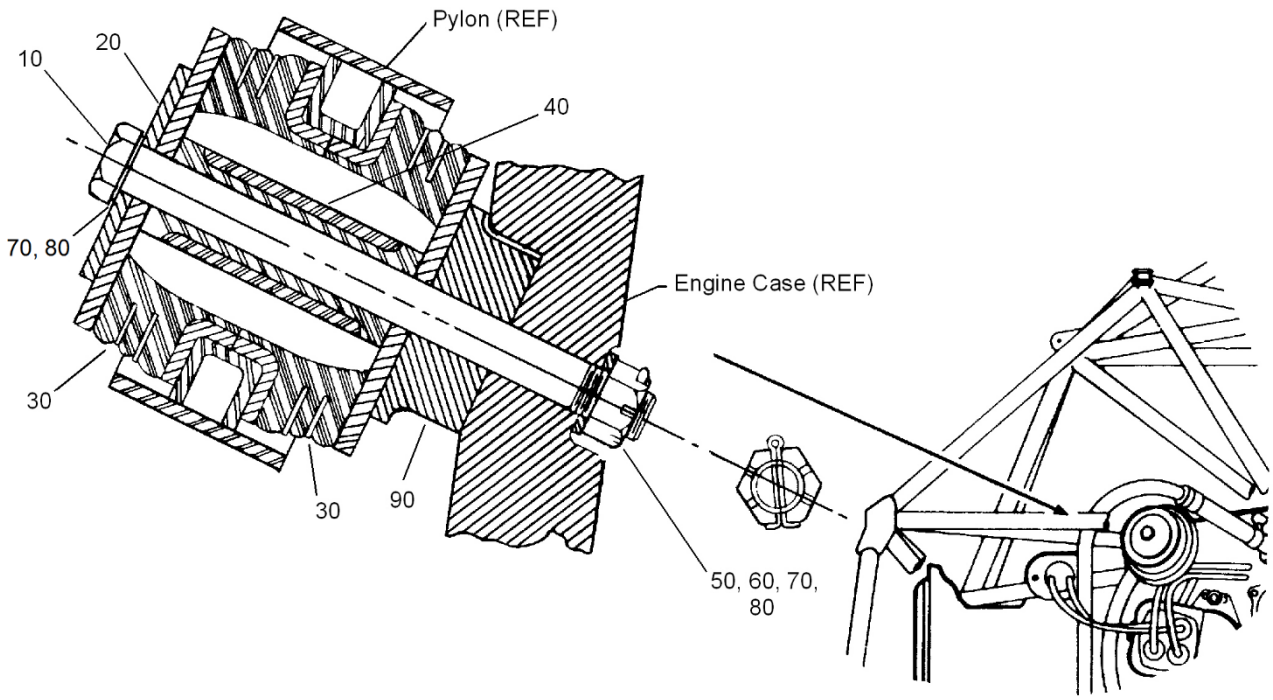

FIGURE 3-30. ENGINE MOUNT ASSEMBLY

UNCONTROLLED COPY WHEN DOWNLOADED OR PRINTED

Visit www.enstromhelicopter.com for instructions to order an original manual and to register for email notification updates.

FIGURE 3-30. ENGINE MOUNT ASSEMBLY

ITEM NUMBER	PART NUMBER	DESCRIPTION	QTY PER ASSY	MODELS AFFECTED						
				F-28A	280	F-28C	280C	F-28F	280F	280FX
–	J-10386-2	. Lord Mount Kit	4	X	X	X	X	X	X	X
10	J-2216-18	. . Bolt	1	X	X	X	X	X	X	X
20	J-2218-61	. . Spacer	1	X	X	X	X	X	X	X
30	J-7763-26	. . Laminated Mount	2	X	X	X	X	X	X	X
40	J-7766-2	. . Bonded Spacer	1	X	X	X	X	X	X	X
50	J-2309-7	. . Nut	1	X	X	X	X	X	X	X
60	J-2214-4	. . Cotter Pin	1	X	X	X	X	X	X	X
60	MS24665-300	. . Cotter Pin (Alternate)	1	X	X	X	X	X	X	X
–A	96394-01	. Hutchinson Mount Kit	4	X	X	X	X	X	X	X
10A	AN7-50	. . Bolt	1	X	X	X	X	X	X	X
20A	28-12141-11	. . Spacer	1	X	X	X	X	X	X	X
30A	00-15073-01	. . Laminated Mount	2	X	X	X	X	X	X	X
40A	85-9217-06	. . Bonded Spacer	1	X	X	X	X	X	X	X
50A	AN310-7	. . Nut	1	X	X	X	X	X	X	X
60A	MS24665-300	. . Cotter Pin	1	X	X	X	X	X	X	X
70	NAS1149F0763P	. Washer	A/R	X	X	X	X	X	X	X
70	AN960-716	. Washer (Superseded by NAS1149F0763P)	A/R	X	X	X	X	X	X	X
80	NAS1149F0732P	. Washer	A/R	X	X	X	X	X	X	X
80	AN960-716L	. Washer (Superseded by NAS1149F0732P)	A/R	X	X	X	X	X	X	X
90*	74465	. Spacer	4	X	X	X	X	X	X	X

* Obtain from Lycoming distributor.

UNCONTROLLED COPY WHEN DOWNLOADED OR PRINTED

Visit www.enstromhelicopter.com for instructions to order an original manual and to register for email notification updates.

NO ILLUSTRATION AVAILABLE

FIGURE 3-31. ENGINE COMPONENTS

UNCONTROLLED COPY WHEN DOWNLOADED OR PRINTED

Visit www.enstromhelicopter.com for instructions to order an original manual and to register for email notification updates.

FIGURE 3-31. ENGINE COMPONENTS

ITEM NUMBER	PART NUMBER	DESCRIPTION	QTY PER ASSY	MODELS AFFECTED						
				F-28A	280	F-28C	280C	F-28F	280F	280FX
–*	201F-5006	Pump:Fuel	1					X	X	X
–*	ALU8521LS	Alternator	1					X	X	X
–*	149-24HT	Starter:Lightweight, 24V	1					X	X	X
–*	31B22111	Starter:Lightweight, 24V (Alternate)	1					X	X	X
–*	RHB32S	Plug:Spark	8					X	X	X
–*	10-682605-13	Magneto:Dual, Engine	1					X	X	X
–*	2524917-1	Nozzle:Fuel Injection	4					X	X	X

* Refer to Lycoming Aircraft Engines Parts Catalog, PC-406-2, Service Bulletins, and Service Letters.

UNCONTROLLED COPY WHEN DOWNLOADED OR PRINTED

Visit www.enstromhelicopter.com for instructions to order an original manual and to register for email notification updates.

INTENTIONALLY LEFT BLANK

UNCONTROLLED COPY WHEN DOWNLOADED OR PRINTED

Visit www.enstromhelicopter.com for instructions to order an original manual and to register for email notification updates.

SECTION 4

MAIN ROTOR SYSTEM

TABLE OF CONTENTS

	Cover Page	4-1
	Table of Contents	4-1
4-1	Main Rotor Hub Assembly	4-2
4-2	Main Rotor Blade and Retention Assembly	4-6
4-2.1	Retention Assembly (STC SR03465CH)	4-10.1
4-3	Flapping Pin and Damper Installation	4-11
4-4	Hydraulic Damper Assembly (28-14375-101)	4-13

UNCONTROLLED COPY WHEN DOWNLOADED OR PRINTED

Visit www.enstromhelicopter.com for instructions to order an original manual and to register for email notification updates.

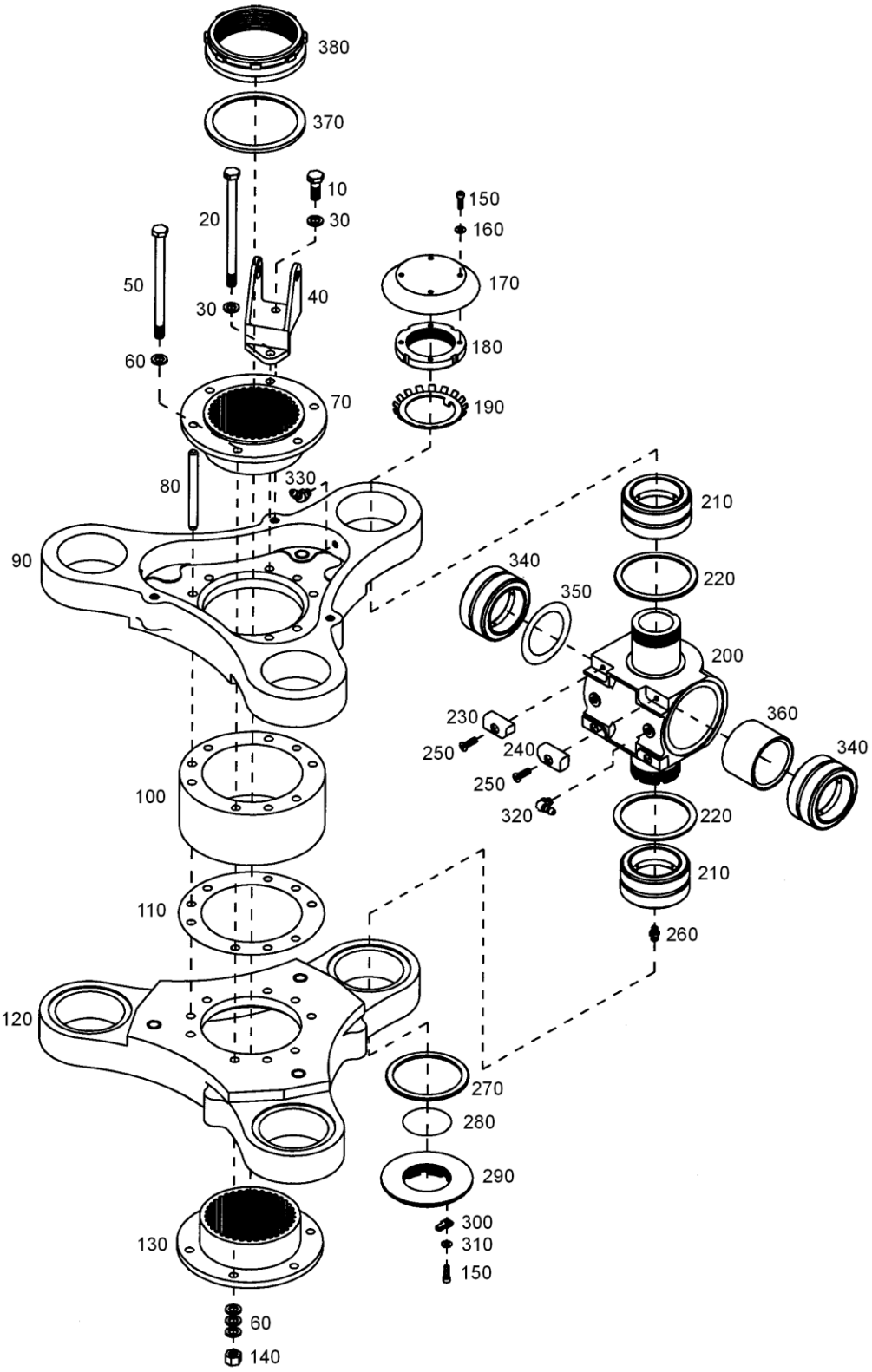

FIGURE 4-1. MAIN ROTOR HUB ASSEMBLY

UNCONTROLLED COPY WHEN DOWNLOADED OR PRINTED

Visit www.enstromhelicopter.com for instructions to order an original manual and to register for email notification updates.

FIGURE 4-1. MAIN ROTOR HUB ASSEMBLY

ITEM NUMBER	PART NUMBER	DESCRIPTION	QTY PER ASSY	MODELS AFFECTED						
				F-28A	280	F-28C	280C	F-28F	280F	280FX
–●	28-14219-7	. Hub Assembly (Center)	1	X	X	X	X	X	X	X
–	28-14219-3	. Hub Assembly (Center) (Superseded by 28-14219-7)	1	X	X	X	X	X	X	X
10	AN5H-6A	. . Bolt	3	X	X	X	X	X	X	X
20●●	AN5H-45A	. . Bolt	3	X	X	X	X	X	X	X
20	AN5H-46A	. . Bolt (Superseded by AN5H-45A)	3	X	X	X	X	X	X	X
30●●	NAS1149D0563H	. . Washer	6	X	X	X	X	X	X	X
30	AN960D516	. . Washer (Superseded by NAS1149D0563H)	6	X	X	X	X	X	X	X
40	28-14202-1	. . Bracket Assembly	3	X	X	X	X	X	X	X
–	28-14250-1	. . . Bushing	2	X	X	X	X	X	X	X
50●●	AN5-43A	. . Bolt	3	X	X	X	X	X	X	X
50	AN5-44A	. . Bolt (Superseded by AN5-43A)	3	X	X	X	X	X	X	X
60●●	NAS1149F0563P	. . Washer	18	X	X	X	X	X	X	X
60	AN960-516	. . Washer (Superseded by NAS1149F0563P)	18	X	X	X	X	X	X	X
70	28-14224-1	. . Shaft Adapter	1	X	X	X	X	X	X	X
80	28-14244-1	. . Pin	3	X	X	X	X	X	X	X
90†	28-14280-5	. . Hub Plate Assembly (Upper)	1	X	X	X	X	X	X	X
90	28-14280-3	. . Hub Plate Assembly (Upper) (Superseded by 28-14280-5)	1	X	X	X	X	X	X	X
90*	28-14280-1	. . Plate Assembly (Upper)	1	X	X	X	X	X	X	X
100	28-14223-1	. . Hub Spacer	1	X	X	X	X	X	X	X
110	28-14290-3	. . Shim (0.001")	A/R	X	X	X	X	X	X	X
110	28-14290-5	. . Shim (0.002")	A/R	X	X	X	X	X	X	X
110	28-14290-7	. . Shim (0.004")	A/R	X	X	X	X	X	X	X
110	28-14290-9	. . Shim (0.0075")	A/R	X	X	X	X	X	X	X
120†	28-14281-5	. . Hub Plate Assembly (Lower)	1	X	X	X	X	X	X	X

UNCONTROLLED COPY WHEN DOWNLOADED OR PRINTED

Visit www.enstromhelicopter.com for instructions to order an original manual and to register for email notification updates.

FIGURE 4-1. MAIN ROTOR HUB ASSEMBLY

ITEM NUMBER	PART NUMBER	DESCRIPTION	QTY PER ASSY	MODELS AFFECTED						
				F-28A	280	F-28C	280C	F-28F	280F	280FX
120	28-14281-3	. . Hub Plate Assembly (Lower) (Superseded by 28-14281-5)	1	X	X	X	X	X	X	X
120**	28-14281-1R	. . Plate Assembly (Lower)	1	X	X	X	X	X	X	X
130	28-14224-3	. . Shaft Adapter (Lower)	1	X	X	X	X	X	X	X
140	MS21044N5	. . Nut	6	X	X	X	X	X	X	X
140	AN365-524A	. . Nut (Superseded by MS21044N5)	6	X	X	X	X	X	X	X
150 ≡	NK-500-8R6	. . Screw	15	X	X	X	X	X	X	X
160	NAS1149DN832H	. . Washer	12	X	X	X	X	X	X	X
160	AN960D8	. . Washer (Superseded by NAS1149DN832H)	12	X	X	X	X	X	X	X
170	28-14228-1	. . Dust Cover	3	X	X	X	X	X	X	X
170	28-14228-15	. . Dust Cover (Superseded by 28-14228-1)	3	X	X	X	X	X	X	X
180	28-14227-1	. . Lock Nut	3	X	X	X	X	X	X	X
190	W-09	. . Lock Washer	3	X	X	X	X	X	X	X
–	28-14219-901	. . Universal Block Assembly	3	X	X	X	X	X	X	X
200▲►	28-14117-11	. . . Block	1	X	X	X	X	X	X	X
200▲	28-14117-1	. . . Block (Superseded by 28-14117-11)	1	X	X	X	X	X	X	X
210††	28NBC2040YZP	. . . Bearing	2	X	X	X	X	X	X	X
220	28-14236-1	. . . Washer	2	X	X	X	X	X	X	X
230▲	28-14251-1	. . . Pad – Stop LH	2	X	X	X	X	X	X	X
240▲	28-14251-2	. . . Pad – Stop RH	2	X	X	X	X	X	X	X
250	NK-510-10R10	. . . Screw	4	X	X	X	X	X	X	X
260	1641-B	. . . Fitting (1/4-28)	1	X	X	X	X	X	X	X
260	MS15001-1	. . . Fitting (Alternate to 1641-B)	1	X	X	X	X	X	X	X
270	28-14236-1	. . Washer	3	X	X	X	X	X	X	X
280	28-14006-3	. . Shim (0.001")	A/R	X	X	X	X	X	X	X
280	28-14006-5	. . Shim (0.002")	A/R	X	X	X	X	X	X	X

UNCONTROLLED COPY WHEN DOWNLOADED OR PRINTED

Visit www.enstromhelicopter.com for instructions to order an original manual and to register for email notification updates.

FIGURE 4-1. MAIN ROTOR HUB ASSEMBLY

ITEM NUMBER	PART NUMBER	DESCRIPTION	QTY PER ASSY	MODELS AFFECTED						
				F-28A	280	F-28C	280C	F-28F	280F	280FX
280	28-14006-7	. . Shim (0.004")	A/R	X	X	X	X	X	X	X
280	28-14006-9	. . Shim (0.005")	A/R	X	X	X	X	X	X	X
280	28-14006-11	. . Shim (0.010")	A/R	X	X	X	X	X	X	X
280	28-14006-13	. . Shim (0.015")	A/R	X	X	X	X	X	X	X
280	28-14006-15	. . Shim (0.020")	A/R	X	X	X	X	X	X	X
280	28-14006-17	. . Shim (0.025")	A/R	X	X	X	X	X	X	X
280	28-14006-19	. . Shim (0.030")	A/R	X	X	X	X	X	X	X
290▲	28-14256-1	. . Nut	3	X	X	X	X	X	X	X
300	28-14257-1	. . Key	3	X	X	X	X	X	X	X
310	NAS1149FN816P	. . Washer	3	X	X	X	X	X	X	X
310	AN960-8L	. . Washer (Superseded by NAS1149FN816P)	3	X	X	X	X	X	X	X
320	1911-B	. . Fitting, Grease	6	X	X	X	X	X	X	X
330	1637-B	. . Fitting	6	X	X	X	X	X	X	X
340††	28NBC2040YZP	. Bearing	6	X	X	X	X	X	X	X
350	28-14009-1	. Shim (0.001")	A/R	X	X	X	X	X	X	X
350	28-14009-2	. Shim (0.002")	A/R	X	X	X	X	X	X	X
350	28-14009-3	. Shim (0.003")	A/R	X	X	X	X	X	X	X
350	28-14009-5	. Shim (0.005")	A/R	X	X	X	X	X	X	X
360▲	28-14235-1	. Spacer	3	X	X	X	X	X	X	X
370▲	28-14008-1	. Spacer	1	X	X	X	X	X	X	X
380▲	28-14004-1	. Nut	1	X	X	X	X	X	X	X

* Superseded by 28-14280-3.

** Superseded by 28-14281-3.

† Effectivity F28F S/N 819, 280FX S/N 2126 and subsequent.

†† A pre-greased 28NBC2040YZP is available as P/N ECD092-1.

● Effectivity F28F S/N 818, 280FX S/N 2118 and subsequent.

●● Effectivity F28F S/N 829, 280FX S/N 2135 and subsequent.

▲ Available as a remanufactured part. Add an “R” to the end of the part number when ordering.

► Effectivity F28F S/N 831 and subsequent, 280FX S/N 2172 and subsequent. Retrofittable to F28F S/N 509 and subsequent, and 280FX S/N 2001 and subsequent.

UNCONTROLLED COPY WHEN DOWNLOADED OR PRINTED

Visit www.enstromhelicopter.com for instructions to order an original manual and to register for email notification updates.

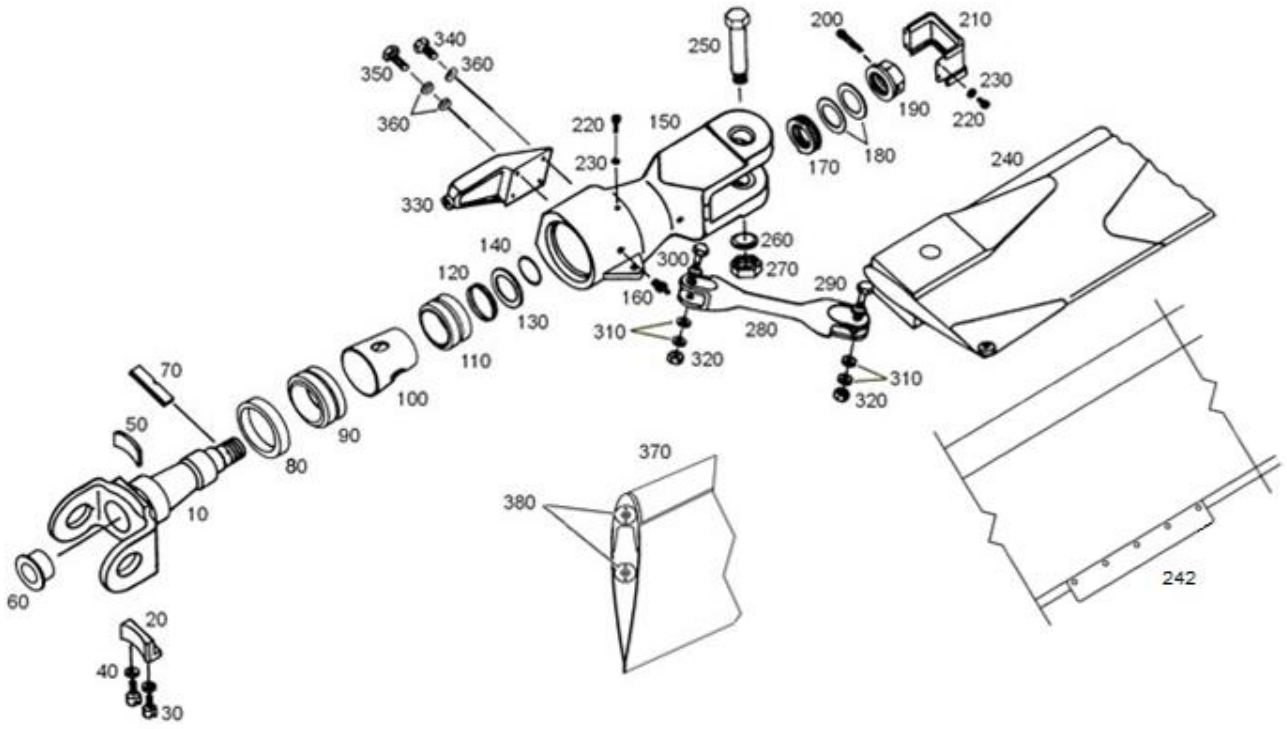

FIGURE 4-2. MAIN ROTOR BLADE AND RETENTION ASSEMBLY

UNCONTROLLED COPY WHEN DOWNLOADED OR PRINTED
Visit www.enstromhelicopter.com for instructions to order an original manual and to register for email notification updates.

FIGURE 4-2. MAIN ROTOR BLADE AND RETENTION ASSEMBLY

ITEM NUMBER	PART NUMBER	DESCRIPTION	QTY PER ASSY	MODELS AFFECTED						
				F-28A	280	F-28C	280C	F-28F	280F	280FX
–	28-14234-909	. Retention Main Rotor Blade	3	X	X	X	X	X	X	X
–	28-14234-9	. Retention Assembly (Superseded by 28-14234-909)	3	X	X	X	X	X	X	X
–▲	28-14234-901	. . Spindle & Stop Pad Assembly	1	X	X	X	X	X	X	X
–	28-14381-903	. . Spindle Assembly (Used with 28-14381-3)	1	X	X	X	X	X	X	X
10	28-14282-13	. . . Spindle	1	X	X	X	X	X	X	X
10	28-14282-11	. . . Spindle (Superseded by 28-14282-13)	1	X	X	X	X			
20	28-14240-1	. . . Pad	1	X	X	X	X	X	X	X
30 ≡	NP500-8R8	. . . Screw	2	X	X	X	X	X	X	X
40	NAS1149DN832H	. . . Washer	2	X	X	X	X	X	X	X
40	AN960D8	. . . Washer (Superseded by NAS1149DN832H)	2	X	X	X	X	X	X	X
50	28-14231-1	. . . Pad	1	X	X	X	X	X	X	X
60	L-18X	. . Plug	1	X	X	X	X	X	X	X
70	28-14311-1	. . Strap	1	X	X	X	X	X	X	X
80	10065 H1L5	. . Oil Seal (3.625")	1	X	X	X	X	X	X	X
90	40NBC2052YZP	. . Bearing	1	X	X	X	X	X	X	X
100▲	28-14261-1	. . Spacer	1	X	X	X	X	X	X	X
110	32NBC2044YZP	. . Bearing	1	X	X	X	X	X	X	X
120	RST-200	. . Ring	1	X	X	X	X	X	X	X
130	28-14313-1	. . Washer	1	X	X	X	X	X	X	X
140	MS28775-029	. . O-Ring (0.070")	1	X	X	X	X	X	X	X
140	2-029	. . O-Ring, N304-75, 1.489" (.070") (Alternate)	1	X	X	X	X	X	X	X
140	NAS1611-029	. . O-Ring (Alternate)	1	X	X	X	X	X	X	X
150▲	28-14279-3	. . Grip Assembly.	1	X	X	X	X	X	X	X
150	28-14279-1	. . Blade Grip (Superseded by 28-14279-3)	1	X	X	X	X	X	X	X
–	28-14270-1	. . Placard	1	X	X	X	X	X	X	X

UNCONTROLLED COPY WHEN DOWNLOADED OR PRINTED

Visit www.enstromhelicopter.com for instructions to order an original manual and to register for email notification updates.

FIGURE 4-2. MAIN ROTOR BLADE AND RETENTION ASSEMBLY

ITEM NUMBER	PART NUMBER	DESCRIPTION	QTY PER ASSY	MODELS AFFECTED						
				F-28A	280	F-28C	280C	F-28F	280F	280FX
160**	1641-B	. . Fitting (1/4”-28 UNF-3B)	2	X	X	X	X	X	X	X
160†	1650	. . Grease Fitting (1/8” NPT)	2	X	X	X	X	X	X	X
160	5045	. . Grease Fitting (Superseded by 1650) (Obsolete)	2	X	X	X	X	X	X	X
170▲	28-14320-15	. . Thrust Bearing Assembly	1	X	X	X	X	X	X	X
180	28-14293-7	. . Shim (0.002")	A/R	X	X	X	X	X	X	X
180	28-14293-9	. . Shim (0.004”)	A/R	X	X	X	X	X	X	X
180	28-14293-11	. . Shim (0.0075”)	A/R	X	X	X	X	X	X	X
180	28-14293-13	. . Shim (0.010")	A/R	X	X	X	X	X	X	X
190▲	28-14335-1	. . Nut	1	X	X	X	X	X	X	X
200	MS24665-360	. . Pin	1	X	X	X	X	X	X	X
200	AN380-4-8	. . Pin (Superseded by MS24665-360)	1	X	X	X	X	X	X	X
210	28-14239-1	. . Cover Assembly (Metal)	1	X	X	X	X	X	X	X
210	28-14239-5	. . Cover Assembly (Superseded by 28-14239-1)	1	X	X	X	X	X	X	X
–	28-14239-3	. . . Cover	1	X	X	X	X	X	X	X
–	28-14239-11	. . . Cover (Superseded by 28-14239-3)	1	X	X	X	X	X	X	X
–	980-001	. . . Channel	A/R	X	X	X	X	X	X	X
–	X-142	. . . Channel (Superseded by 980-001)	A/R	X	X	X	X	X	X	X
220 ≡	NP500-8R6	. . Screw	3	X	X	X	X	X	X	X
230	NAS1149DN832H	. . Washer	5	X	X	X	X	X	X	X
230	AN960D8	. . Washer (Superseded by NAS1149DN832H)	5	X	X	X	X	X	X	X
240	28-14100-9	. Blade Assembly	3	X	X	X	X	X	X	X
242	28-14119-11	. . Trim Tab	2	X	X	X	X	X	X	X
–	MS20470AD3-4	. . Rivet	10	X	X	X	X	X	X	X
250▲	28-14007-3	. Pin – Drag Hinge	3	X	X	X	X	X	X	X
250	28-14007-1	. Pin (Superseded by 28-14007-3)	3	X	X	X	X	X	X	X
260	NAS1149C1290R	. Washer	3	X	X	X	X	X	X	X

UNCONTROLLED COPY WHEN DOWNLOADED OR PRINTED

Visit www.enstromhelicopter.com for instructions to order an original manual and to register for email notification updates.

FIGURE 4-2. MAIN ROTOR BLADE AND RETENTION ASSEMBLY

ITEM NUMBER	PART NUMBER	DESCRIPTION	QTY PER ASSY	MODELS AFFECTED						
				F-28A	280	F-28C	280C	F-28F	280F	280FX
260	AN960C1216	. Washer (Superseded by NAS1149C1290R)	3	X	X	X	X	X	X	X
270	AN364-1216A	. Nut	3	X	X	X	X	X	X	X
280▲	28-14283-1	. Drag Link	3	X	X	X	X	X	X	X
290	AN176-15A	. Bolt	3	X	X	X	X	X	X	X
300	AN176-17A	. Bolt	3	X	X	X	X	X	X	X
310	NAS1149D0663H	. Washer	18	X	X	X	X	X	X	X
310	AN960D616	. Washer (Superseded by NAS1149D0663H	18	X	X	X	X	X	X	X
320	MS21083N6	. Nut	6	X	X	X	X	X	X	X
320	AN364-624A	. Nut (Superseded by MS21083N6)	6	X	X	X	X	X	X	X
330▲	28-14278-1	. Pitch Arm	3	X	X	X	X	X	X	X
340	MS20074-05-06	. Bolt	6	X	X	X	X	X	X	X
340	AN75A6	. Bolt (Superseded by MS20074-05-06)	6	X	X	X	X	X	X	X
350	AN75-A12	. Bolt	6	X	X	X	X	X	X	X
350	MS20074-05-12	. Bolt (Alternate)	6	X	X	X	X	X	X	X
350	MS24677-52	. Screw (Alternate)	6	X	X	X	X	X	X	X
360	NAS1149F0563P	. Washer (0.063)	18	X	X	X	X	X	X	X
360	AN960-516	. Washer (Superseded by NAS1149F0563P)	18	X	X	X	X	X	X	X
360*	NAS1149F0532P	. Washer	A/R	X	X	X	X	X	X	X
360*	AN960-516L	. Washer (Superseded by NAS1149F0532P)	A/R	X	X	X	X	X	X	X
370	28-14141-913	. Leading Edge Tape	A/R	X	X	X	X	X	X	X
380	28-14109-1	. Plug, Balance (Per Blade)	2	X	X	X	X	X	X	X
–	28-14110-1	. . Washer - Balance	A/R	X	X	X	X	X	X	X
–	28-14110-2	. . Washer - Balance	A/R	X	X	X	X	X	X	X
–	28-14110-3	. . Washer - Balance	A/R	X	X	X	X	X	X	X
–	MS24693-S287	. . Screw	2	X	X	X	X	X	X	X
–	ACF-50	. . Lubricant: Anti Corrosive	A/R	X	X	X	X	X	X	X

UNCONTROLLED COPY WHEN DOWNLOADED OR PRINTED

Visit www.enstromhelicopter.com for instructions to order an original manual and to register for email notification updates.

*	Use one (1) AN960-516L with MS24677-49. Use one (1) AN960-516L and one (1) AN960-516 with MS24677-52.
▲	Available as a remanufactured part. Add an “R” to the end of the part number when ordering.
≡	See Appendix A for equivalent part information.
**	Effectivity F28F S/N 812 and prior, 280FX S/N 2081 and prior, F28A/C all S/N, and 280C/F all S/N, if equipped with original grips (with 1/4”-28 UNF-3B pipe thread).
†	Effectivity F28F S/N 831 and subsequent. Effectivity 280FX S/N 2138 and subsequent. Retrofittable to F28F S/N 813 and 280FX S/N 2082 and subsequent.

UNCONTROLLED COPY WHEN DOWNLOADED OR PRINTED
Visit www.enstromhelicopter.com for instructions to order an original manual and to register for email notification updates.

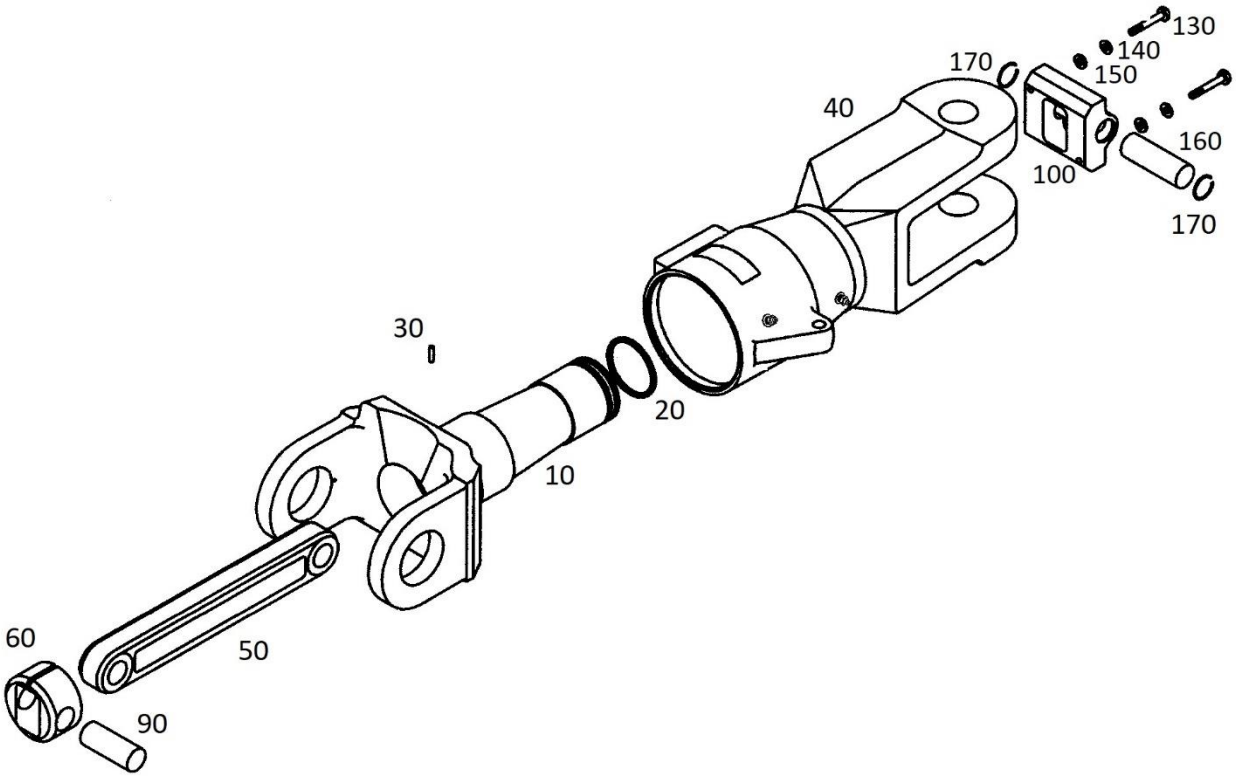

FIGURE 4-2.1. RETENTION ASSEMBLY (STC SR03465CH)

UNCONTROLLED COPY WHEN DOWNLOADED OR PRINTED
Visit www.enstromhelicopter.com for instructions to order an original manual and to register for email notification updates.

FIGURE 4-2.1. RETENTION ASSEMBLY (STC SR03465CH)

ITEM NUMBER	PART NUMBER	DESCRIPTION	QTY PER ASSY	MODELS AFFECTED						
				F-28A	280	F-28C	280C	F-28F	280F	280FX
10	28-14385-15	. Spindle	1	X	X	X	X	X	X	X
10A*	AA-28-14385-15	. Spindle (Alternate)	1	X	X	X	X	X	X	X
20	CR 17240	. Seal: Retention	1	X	X	X	X	X	X	X
30	MS16555-27	. Pin	1	X	X	X	X	X	X	X
40	28-14386-5	. Grip Assembly	1	X	X	X	X	X	X	X
40A*	AA-28-14386-1	. Grip Assembly (Alternate)	1	X	X	X	X	X	X	X
50*	AA-ECD-084-280	. Tension/Torsion Strap	1	X	X	X	X	X	X	X
60	28-14381-902	. Cylinder Assembly	1	X	X	X	X	X	X	X
-70	28-14383-13	. . Cylinder	1	X	X	X	X	X	X	X
-80	28-14389-13	. . Cover	1	X	X	X	X	X	X	X
90	28-14382-21	. Pin	2	X	X	X	X	X	X	X
100	28-14381-901	. Lug Assembly	1	X	X	X	X	X	X	X
-110	28-14389-11	. . Cover	1	X	X	X	X	X	X	X
-120	28-14384-13	. . Lug – TT Strap Retention	1	X	X	X	X	X	X	X
130	AN3-12A	. Bolt	2	X	X	X	X	X	X	X
140	AN960-10	. Washer	2	X	X	X	X	X	X	X
150	AN960-10L	. Washer	2	X	X	X	X	X	X	X
160	28-14382-19	. Pin	1	X	X	X	X	X	X	X
170	VH-75	. Retaining Ring	2	X	X	X	X	X	X	X

* Supplied by Airwolf Aerospace as part of STC SR03465CH.

UNCONTROLLED COPY WHEN DOWNLOADED OR PRINTED
Visit www.enstromhelicopter.com for instructions to order an original manual and to register for email notification updates.

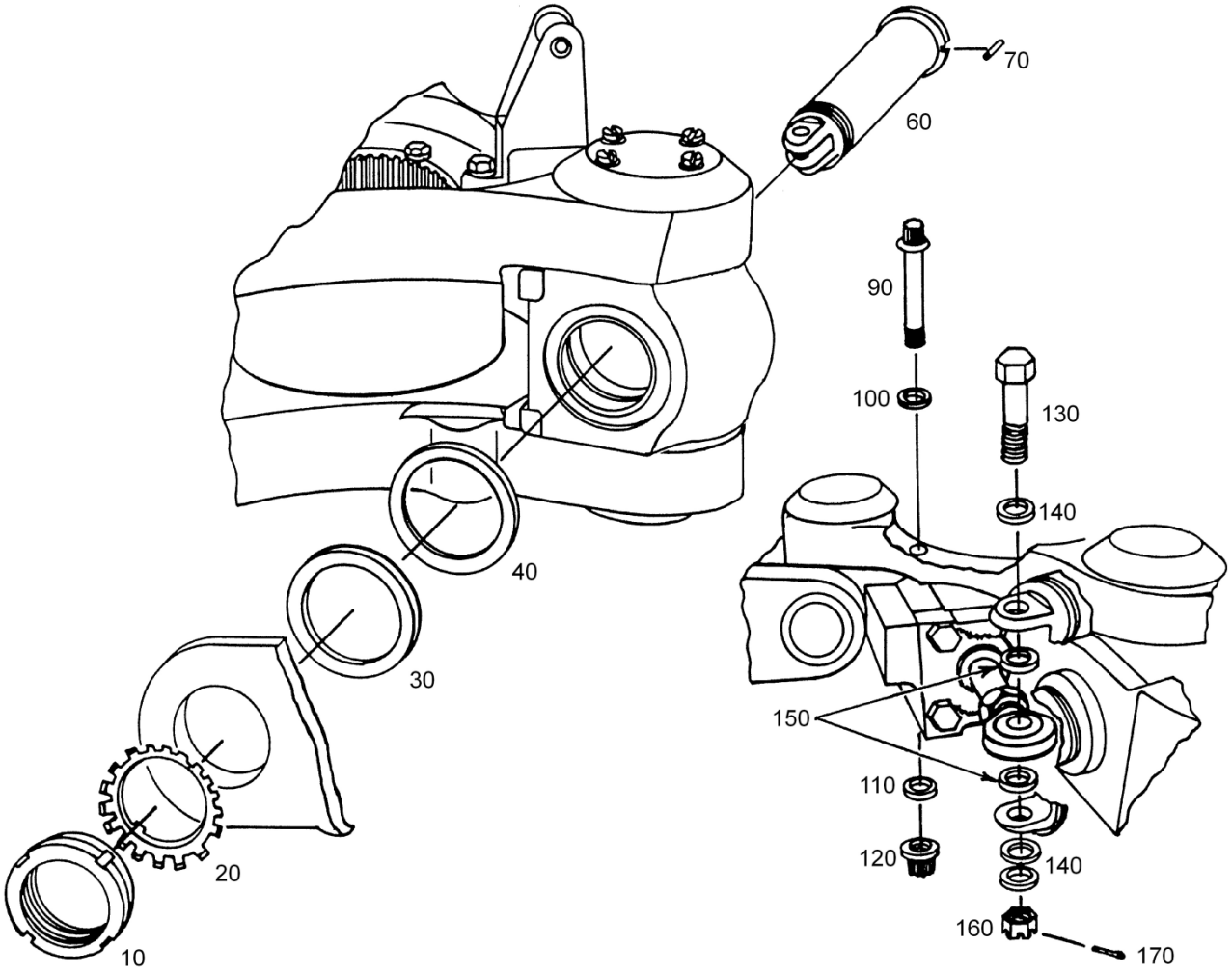

FIGURE 4-3. FLAPPING PIN AND DAMPER INSTALLATION

UNCONTROLLED COPY WHEN DOWNLOADED OR PRINTED

Visit www.enstromhelicopter.com for instructions to order an original manual and to register for email notification updates.

FIGURE 4-3. FLAPPING PIN AND DAMPER INSTALLATION

ITEM NUMBER	PART NUMBER	DESCRIPTION	QTY PER ASSY	MODELS AFFECTED						
				F-28A	280	F-28C	280C	F-28F	280F	280FX
10	28-14227-11	. Lock Nut	3	X	X	X	X	X	X	X
10	N-09	. Nut (Superseded by 28-14227-11)	3	X	X	X	X	X	X	X
20	W-09	. Lock Washer	3	X	X	X	X	X	X	X
30	28-14236-1	. Washer	6	X	X	X	X	X	X	X
40	28-14019-2	. Shim (0.002") (Obsolete)	A/R	X	X	X	X	X	X	X
40	28-14019-3	. Shim (0.003")	A/R	X	X	X	X	X	X	X
40	28-14019-5	. Shim (0.005")	A/R	X	X	X	X	X	X	X
40	28-14019-6	. Shim (0.006")	A/R	X	X	X	X	X	X	X
40	28-14019-10	. Shim (0.010")	A/R	X	X	X	X	X	X	X
60▲	28-14233-3	. Pin	3	X	X	X	X	X	X	X
60	28-14233-2	. Pin (Superseded by 28-14233-3)	3	X	X	X	X	X	X	X
70	MS16562-215	. Pin	3	X	X	X	X	X	X	X
70	23S-094-0625	. Pin (Alternate)	3	X	X	X	X	X	X	X
90	LWB-22-6-58	. Bolt	3	X	X	X	X	X	X	X
90	HPF1260-6-58	. Bolt (Alternate)	3	X	X	X	X	X	X	X
90	NAS626-58	. Bolt (Alternate)	3	X	X	X	X	X	X	X
100	WC-22-6	. Washer	3	X	X	X	X	X	X	X
100	MS21299C6	. Washer (Alternate)	3	X	X	X	X	X	X	X
110	WP-22-6	. Washer	3	X	X	X	X	X	X	X
110	AP22-6	. Washer (Alternate)	3	X	X	X	X	X	X	X
120	FN22M-624	. Nut	3	X	X	X	X	X	X	X
130	AN178-21	. Bolt	3	X	X	X	X	X	X	X
140	AN960-816	. Washer (0.063")	9	X	X	X	X	X	X	X
150	28-14259-1	. Washer	6	X	X	X	X	X	X	X
160	F12NE-4753-080	. Nut (0.563")	3	X	X	X	X	X	X	X
170	MS24665-302	. Pin	3	X	X	X	X	X	X	X
170	AN381-3-16	. Pin (Superseded by MS24665-302)	3	X	X	X	X	X	X	X

▲ Available as a remanufactured part. Add an “R” to the end of the part number when ordering.

UNCONTROLLED COPY WHEN DOWNLOADED OR PRINTED

Visit www.enstromhelicopter.com for instructions to order an original manual and to register for email notification updates.

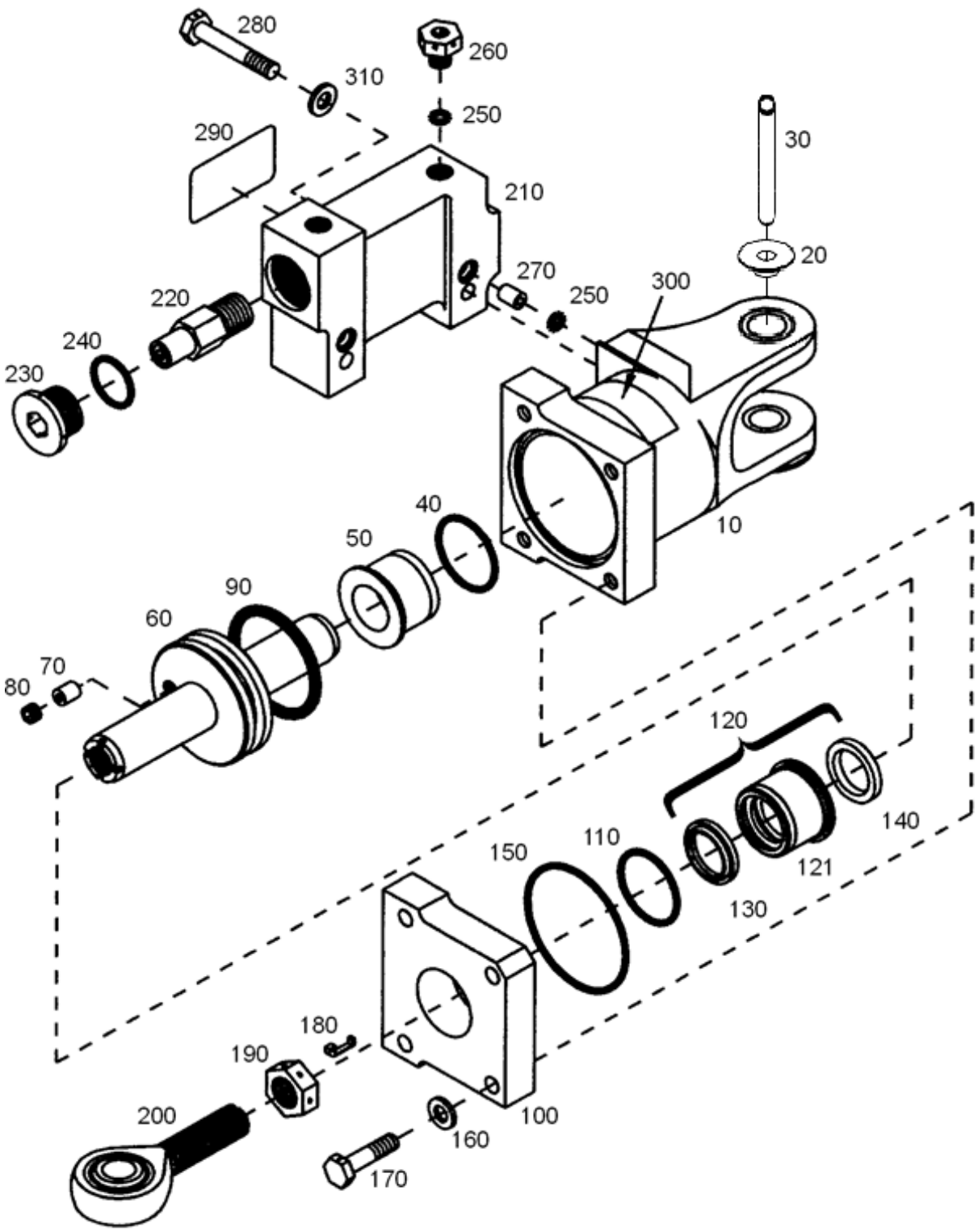

FIGURE 4-4. HYDRAULIC DAMPER ASSEMBLY (28-14375-101)

UNCONTROLLED COPY WHEN DOWNLOADED OR PRINTED
Visit www.enstromhelicopter.com for instructions to order an original manual and to register for email notification updates.

FIGURE 4-4. HYDRAULIC DAMPER ASSEMBLY (28-14375-101)

ITEM NUMBER	PART NUMBER	DESCRIPTION	QTY PER ASSY	MODELS AFFECTED						
				F-28A	280	F-28C	280C	F-28F	280F	280FX
–†▲	28-14375-101	. Damper Assembly	3	X	X	X	X	X	X	X
–**	28-14375-105	. Damper Assembly (Superseded by 28-14375-101)	3	X	X	X	X	X	X	X
–*	28-14375-7	. Damper (Superseded by 28-14375-105)	3	X	X	X	X	X	X	X
–	28-14375-906	. . Damper Housing Assembly	1	X	X	X	X	X	X	X
10▲	28-14357-5	. . . Housing (Used with -105)	1	X	X	X	X	X	X	X
10▲	28-14357-3	. . . Housing (Used with -101)	1	X	X	X	X	X	X	X
–	28-14268-1	. . . Sleeve - Housing	1	X	X	X	X	X	X	X
20	28-14276-1	. . . Bushing (Used with -105)	2	X	X	X	X	X	X	X
20	28-14359-15	. . . Bushing (Used with -101)	2	X	X	X	X	X	X	X
30	28-14277-1	. . . Bushing (Used with -105)	1	X	X	X	X	X	X	X
30	28-14359-17	. . . Spacer (Used with -101)	1	X	X	X	X	X	X	X
40	2-025 E515-80	. . . O-Ring (0.070")	1	X	X	X	X	X	X	X
40	NAS1611-025	. . . O-Ring (Alternate)	1	X	X	X	X	X	X	X
50	28-14358-3	. . . Sleeve Assembly (See item 120 for breakdown)	1	X	X	X	X	X	X	X
60▲	28-14370-17	. . Piston	1	X	X	X	X	X	X	X
60▲	28-14370-15	. . Piston (Superseded by 28-14370-17)	1	X	X	X	X	X	X	X
70	28-14372-3	. . Sleeve	1	X	X	X	X	X	X	X
70	28-14372-1	. . Sleeve (Superseded by 28-14372-15)	1	X	X	X	X	X	X	X
80▲	28-14371-1	. . Set Screw	1	X	X	X	X	X	X	X
90	PGZF0A0180	. . Seal (Preferred)	1	X	X	X	X	X	X	X
90	2-326 E515-80	. . O-Ring (0.210")	1	X	X	X	X	X	X	X
90	NAS1611-326	. . O-Ring (Alternate)	1	X	X	X	X	X	X	X
–	28-14375-905	. . Damper Cover Assembly	1	X	X	X	X	X	X	X
100	28-14265-3	. . . Cap	1	X	X	X	X	X	X	X
110	2-025 E515-80	. . . O-Ring (0.070")	1	X	X	X	X	X	X	X
110	NAS1611-025	. . . O-Ring (Alternate)	1	X	X	X	X	X	X	X

UNCONTROLLED COPY WHEN DOWNLOADED OR PRINTED

Visit www.enstromhelicopter.com for instructions to order an original manual and to register for email notification updates.

FIGURE 4-4. HYDRAULIC DAMPER ASSEMBLY (28-14375-101)

ITEM NUMBER	PART NUMBER	DESCRIPTION	QTY PER ASSY	MODELS AFFECTED						
				F-28A	280	F-28C	280C	F-28F	280F	280FX
120	28-14358-4	. . . Sleeve Assembly	1	X	X	X	X	X	X	X
121▲	28-14356-5	. . . . Sleeve	1	X	X	X	X	X	X	X
130	959-5	. . . . Wiper Ring	1	X	X	X	X	X	X	X
140	12500750-125B	. . . . Seal	1	X	X	X	X	X	X	X
140	12500750	. . . . Seal (Superseded by 12500750-125B)	1	X	X	X	X	X	X	X
150	2-137 E515-80	. . O-Ring (0.103")	1	X	X	X	X	X	X	X
150	NAS1611-137	. . O-Ring (Alternate)	1	X	X	X	X	X	X	X
160	NAS1149F0463P	. . Washer (0.063)	6	X	X	X	X	X	X	X
160	AN960-416	. . Washer (Superseded by NAS1149F0463P)	6	X	X	X	X	X	X	X
170	AN4H10A	. . Bolt	4	X	X	X	X	X	X	X
180	NAS559-3	. . Lock – Rod End	1	X	X	X	X	X	X	X
190	NAS509-8	. . Nut (Drilled)	1	X	X	X	X	X	X	X
200	ECD091-1	. . Bearing	1	X	X	X	X	X	X	X
210▲	28-14366-1	. . Housing	1	X	X	X	X	X	X	X
220▲	28-14367-7	. . Relief Valve Assembly	2	X	X	X	X	X	X	X
230▲	28-14368-2	. . Plug	2	X	X	X	X	X	X	X
240	NAS1612-10	. . . O-Ring	1	X	X	X	X	X	X	X
250	NAS1612-2	. . O-Ring (0.064)	4	X	X	X	X	X	X	X
260▲	AN814-2DL	. . Plug	2	X	X	X	X	X	X	X
270	28-14369-1	. . Sleeve	2	X	X	X	X	X	X	X
280	AN4H15A	. . Bolt	2	X	X	X	X	X	X	X
290	28-14374-15	. . Placard	1	X	X	X	X	X	X	X
300	28-13145-1	. . ID Placard	1	X	X	X	X	X	X	X

UNCONTROLLED COPY WHEN DOWNLOADED OR PRINTED

Visit www.enstromhelicopter.com for instructions to order an original manual and to register for email notification updates.

FIGURE 4-4. HYDRAULIC DAMPER ASSEMBLY (28-14375-101)

ITEM NUMBER	PART NUMBER	DESCRIPTION	QTY PER ASSY	MODELS AFFECTED						
				F-28A	280	F-28C	280C	F-28F	280F	280FX
310	NAS1149F0463P	. . Washer	2	X	X	X	X	X	X	X
–	MS20995C32	. . Wire	A/R	X	X	X	X	X	X	X

* Effectivity F28F S/N 818 and previous. Effectivity 280FX S/N 2124 and previous. Retrofittable to F28F S/N 509 and 280FX S/N 2001.

** Effectivity F28F S/N 818 and previous. Effectivity 280FX S/N 2125 and previous.

† Effectivity F28F S/N 819 and subsequent. Effectivity 280FX S/N 2126 and subsequent. Retrofittable to F28F S/N 509 and 280FX S/N 2001

NOTE: Dampers returned to Enstrom for overhaul will be upgraded to the latest configuration.

▲ Available as a remanufactured part. Add an “R” to the end of the part number when ordering.

UNCONTROLLED COPY WHEN DOWNLOADED OR PRINTED

Visit www.enstromhelicopter.com for instructions to order an original manual and to register for email notification updates.

SECTION 5

BELT DRIVE ASSEMBLY

TABLE OF CONTENTS

	Cover Page	5-1
	Table of Contents	5-1
5-1	Belt Tension Assembly and Installation	5-2
5-2	Spring Housing Assembly	5-7
5-3	Idler Pulley and Support Assembly	5-9
5-4	Jack Strut and Pulley Assembly	5-15
5-5	Main Drive Engagement Control System	5-21
5-6	Main Rotor Gearbox Installation	5-25
5-7	Main Rotor Transmission Seal Retainer Assembly	5-30

UNCONTROLLED COPY WHEN DOWNLOADED OR PRINTED

Visit www.enstromhelicopter.com for instructions to order an original manual and to register for email notification updates.

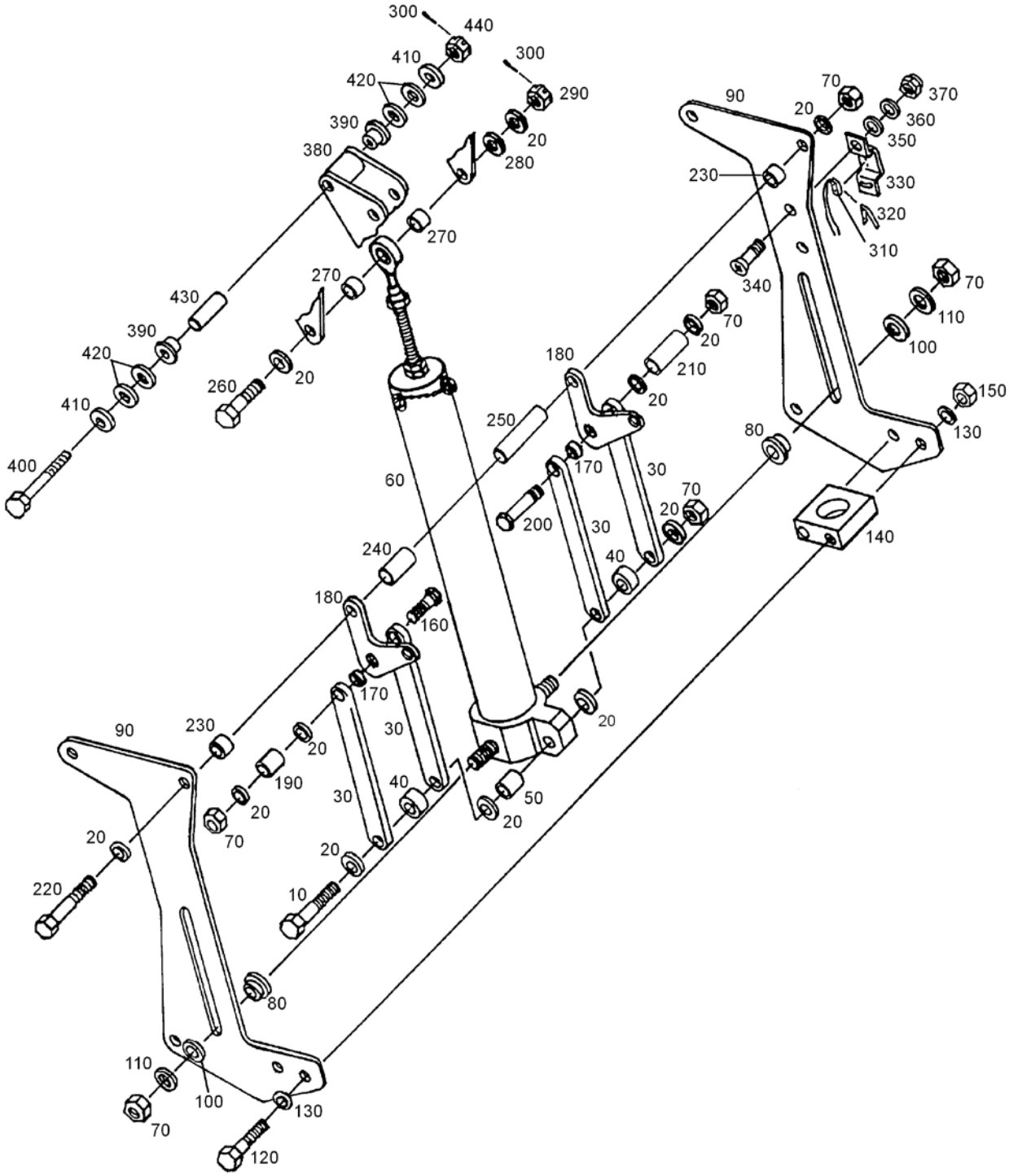

Sheet 1 of 2

FIGURE 5-1. BELT TENSION ASSEMBLY AND INSTALLATION

UNCONTROLLED COPY WHEN DOWNLOADED OR PRINTED

Visit www.enstromhelicopter.com for instructions to order an original manual and to register for email notification updates.

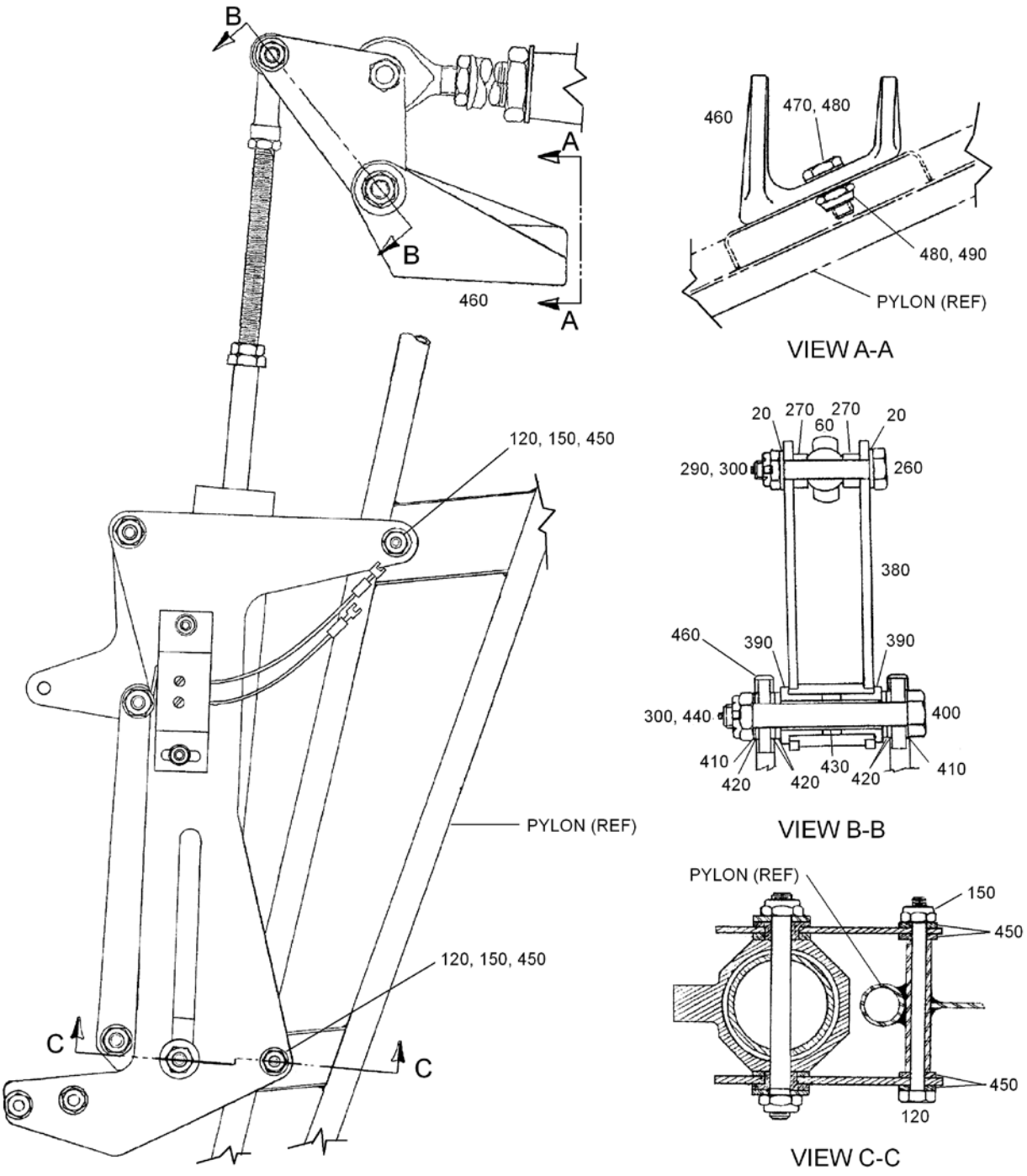

Sheet 2 of 2

FIGURE 5-1. BELT TENSION ASSEMBLY AND INSTALLATION

UNCONTROLLED COPY WHEN DOWNLOADED OR PRINTED

Visit www.enstromhelicopter.com for instructions to order an original manual and to register for email notification updates.

FIGURE 5-1. BELT TENSION ASSEMBLY AND INSTALLATION

ITEM NUMBER	PART NUMBER	DESCRIPTION	QTY PER ASSY	MODELS AFFECTED						
				F-28A	280	F-28C	280C	F-28F	280F	280FX
–	28-132020-901	. Tension Belt System Drive	1	X	X	X	X	X	X	X
10	AN4-15A	. . Bolt	1	X	X	X	X	X	X	X
20	NAS1149F0432P	. . Washer	12	X	X	X	X	X	X	X
20	AN960-416L	. . Washer (Superseded By NAS1149F0432P)	12	X	X	X	X	X	X	X
30	28-13268-1	. . Strap – Push-Pull	4	X	X	X	X	X	X	X
40	28-13277-1	. . Spacer	2	X	X	X	X	X	X	X
50	28-13285-6	. . Spacer	1	X	X	X	X	X	X	X
60	28-13259-4	. . Assembly – Spring Housing (See Figure 5-2 For Breakdown)	1	X	X	X	X	X	X	X
70	MS21083N4	. . Nut	6	X	X	X	X	X	X	X
70	AN364-428A	. . Nut (Superseded by MS21083N4)	6	X	X	X	X	X	X	X
80	28-13264-1	. . Guide	2	X	X	X	X	X	X	X
90	28-13283-1	. . Bracket	2	X	X	X	X	X	X	X
100	28-13265-1	. . Washer	2	X	X	X	X	X	X	X
110	1/4 Harper	. . Washer	2	X	X	X	X	X	X	X
120	AN3-22A	. . Bolt	4	X	X	X	X	X	X	X
130	NAS1149F0332P	. . Washer	4	X	X	X	X	X	X	X
130	AN960-10L	. . Washer (Superseded By NAS1149F0332P)	4	X	X	X	X	X	X	X
140	28-13269-1	. . Fitting	1	X	X	X	X	X	X	X
150	MS21083N3	. . Nut	4	X	X	X	X	X	X	X
150	AN364-1032A	. . Nut (Superseded by MS21083N3)	4	X	X	X	X	X	X	X
160	28-13266-1	. . Bolt	1	X	X	X	X	X	X	X
170	28-13285-7	. . Spacer	2	X	X	X	X	X	X	X
180	28-13274-1	. . Bellcrank	2	X	X	X	X	X	X	X
190	28-13267-1	. . Spacer	1	X	X	X	X	X	X	X
200	28-13266-15	. . Bolt	1	X	X	X	X	X	X	X

Visit www.enstromhelicopter.com for instructions to order an original manual and to register for email notification updates.

FIGURE 5-1. BELT TENSION ASSEMBLY AND INSTALLATION

ITEM NUMBER	PART NUMBER	DESCRIPTION	QTY PER ASSY	MODELS AFFECTED						
				F-28A	280	F-28C	280C	F-28F	280F	280FX
210	28-13267-11	. . Spacer	1	X	X	X	X	X	X	X
220	AN4-23A	. . Bolt	1	X	X	X	X	X	X	X
230	28-13280-3	. . Spacer	2	X	X	X	X	X	X	X
240	28-13280-4	. . Spacer	1	X	X	X	X	X	X	X
250	28-13285-5	. . Spacer	1	X	X	X	X	X	X	X
260	AN4-14	. . Bolt	1	X	X	X	X	X	X	X
270	28-16520-1	. . Spacer	2	X	X	X	X	X	X	X
280	NAS1149F0463P	. . Washer (0.063)	1	X	X	X	X	X	X	X
280	AN960-416	. . Washer (Superseded by NAS1149F0463P)	1	X	X	X	X	X	X	X
290	MS17825-4	. . Nut (0.281")	1	X	X	X	X	X	X	X
290	F12NE-4753-048	. . Nut (Superseded by MS17825-4)	1	X	X	X	X	X	X	X
300	MS24665-151	. . Pin	2	X	X	X	X	X	X	X
300	AN381-2-10	. . Pin (Superseded by MS24665-151)	2	X	X	X	X	X	X	X
–	28-132022-1	. . Micro-Switch Assembly	1	X	X	X	X	X	X	X
310	1SE1	. . . Switch	1	X	X	X	X	X	X	X
320	JE-1	. . . Actuator (Includes Mounting Hardware)	1	X	X	X	X	X	X	X
330	28-132022-11	. . . Bracket	1	X	X	X	X	X	X	X
340	AN525-8R6	. . Screw	2	X	X	X	X	X	X	X
350	MS35338-42	. . Washer (#8 Lite)	2	X	X	X	X	X	X	X
350	AN935-8	. . Washer (Superseded by MS35338-42)	2	X	X	X	X	X	X	X
360	NAS1149FN816P	. . Washer	2	X	X	X	X	X	X	X
360	AN960-8L	. . Washer (Superseded by NAS1149F0816P)	2	X	X	X	X	X	X	X
370	MS35649-282	. . Nut	2	X	X	X	X	X	X	X
370	AN340-8	. . Nut (Superseded by MS35649-282)	2	X	X	X	X	X	X	X
380	28-13260-1	. . Bellcrank Assembly	1	X	X	X	X	X	X	X

UNCONTROLLED COPY WHEN DOWNLOADED OR PRINTED

Visit www.enstromhelicopter.com for instructions to order an original manual and to register for email notification updates.

FIGURE 5-1. BELT TENSION ASSEMBLY AND INSTALLATION

ITEM NUMBER	PART NUMBER	DESCRIPTION	QTY PER ASSY	MODELS AFFECTED						
				F-28A	280	F-28C	280C	F-28F	280F	280FX
390	FB68-4	. . . Bushing: Flanged 0.375" (0.500") BR	2	X	X	X	X	X	X	X
400	AN5-22	. . Bolt	1	X	X	X	X	X	X	X
410	NAS1149F0532P	. . Washer	2	X	X	X	X	X	X	X
410	AN960-516L	. . Washer (Superseded by NAS1149F0532P)	2	X	X	X	X	X	X	X
420	NAS1149F0563P	. . Washer (0.063)	5	X	X	X	X	X	X	X
420	AN960-516	. . Washer (Superseded by NAS1149F0563P)	5	X	X	X	X	X	X	X
430	28-13284-1	. . Spacer	1	X	X	X	X	X	X	X
440	MS17825-5	. . Nut (0.328")	1	X	X	X	X	X	X	X
440	F12NE-4753-054	. . Nut (Superseded by MS17825-5)	1	X	X	X	X	X	X	X
450	NAS1149F0363P	. . Washer (0.063")	4	X	X	X	X	X	X	X
450	AN960-10	. . Washer (Superseded by NAS1149F0363P)	4	X	X	X	X	X	X	X
460	28-11128-1	. Mount Bracket	1	X	X	X	X	X	X	X
470	AN4-6A	. Bolt	2	X	X	X	X	X	X	X
480	ECD050-11	. Washer	4	X	X	X	X	X	X	X
490	MS21083N4	. Nut	2	X	X	X	X	X	X	X
490	AN364-428A	. Nut (Superseded by MS21083N4)	2	X	X	X	X	X	X	X

UNCONTROLLED COPY WHEN DOWNLOADED OR PRINTED

Visit www.enstromhelicopter.com for instructions to order an original manual and to register for email notification updates.

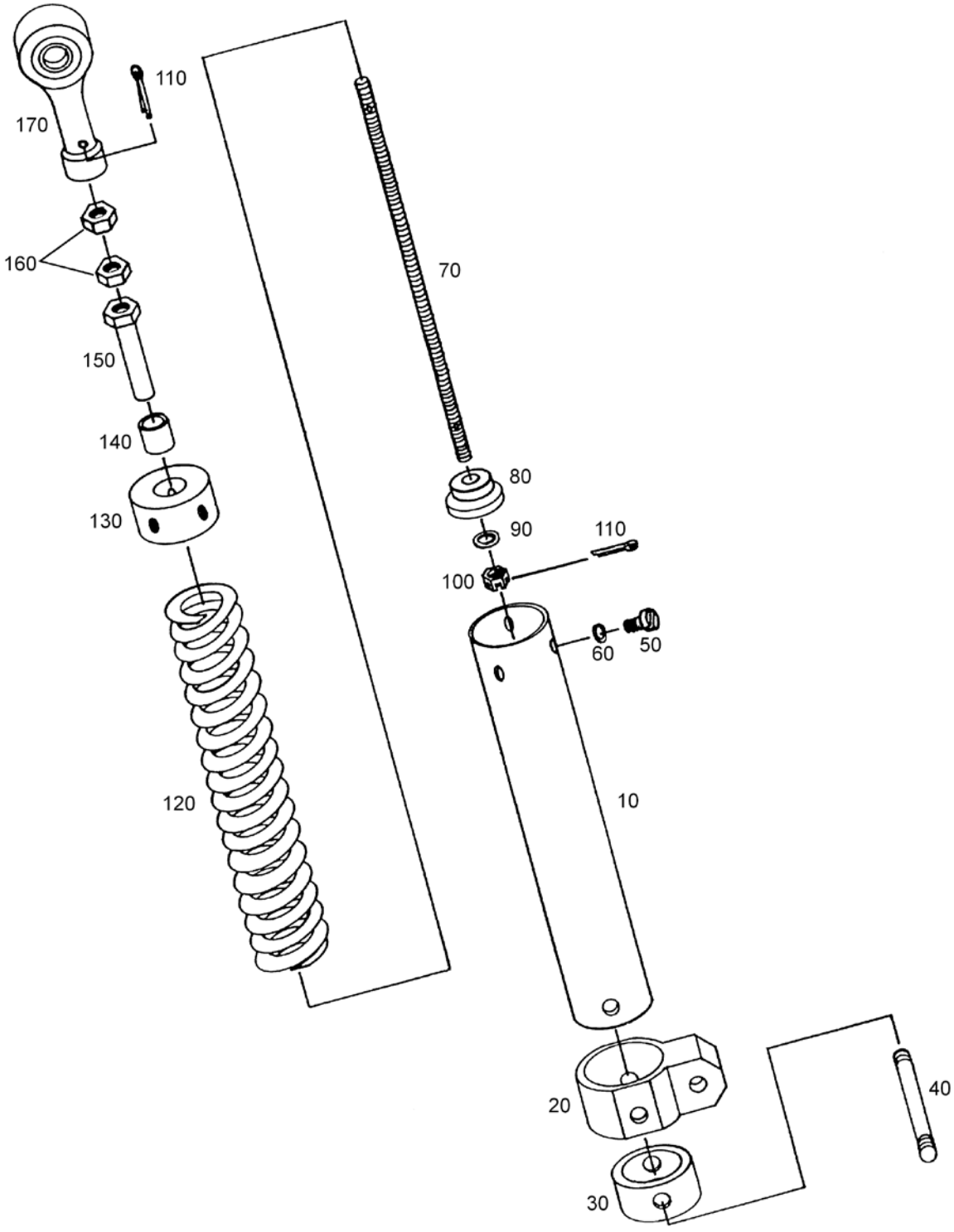

FIGURE 5-2. SPRING HOUSING ASSEMBLY

UNCONTROLLED COPY WHEN DOWNLOADED OR PRINTED

Visit www.enstromhelicopter.com for instructions to order an original manual and to register for email notification updates.

FIGURE 5-2. SPRING HOUSING ASSEMBLY

ITEM NUMBER	PART NUMBER	DESCRIPTION	QTY PER ASSY	MODELS AFFECTED						
				F-28A	280	F-28C	280C	F-28F	280F	280FX
–	28-13259-4	. Assembly – Spring Housing	1	X	X	X	X	X	X	X
10	28-13253-1	. . Housing, Spring	1	X	X	X	X	X	X	X
20	28-13250-11	. . Anchor	1	X	X	X	X	X	X	X
20	28-13250-1	. . Anchor (Replaced by 28-13250-11)	1	X	X	X	X	X	X	X
30	28-13251-1	. . Retainer	1	X	X	X	X	X	X	X
40	28-13254-1	. . Shaft	1	X	X	X	X	X	X	X
50	AN503-10-6	. . Screw	3	X	X	X	X	X	X	X
60	NAS1149F0332P	. . Washer	3	X	X	X	X	X	X	X
60	AN960-10L	. . Washer (Superseded by NAS1149F0332P)	3	X	X	X	X	X	X	X
70	28-13256-1	. . Shaft	1	X	X	X	X	X	X	X
80	28-13252-1	. . Cap - Spring	1	X	X	X	X	X	X	X
90	NAS1149F0563P	. . Washer (0.063)	1	X	X	X	X	X	X	X
90	AN960-516	. . Washer (Superseded by NAS1149F0563P)	1	X	X	X	X	X	X	X
100	MS17825-5	. . Nut (0.328")	1	X	X	X	X	X	X	X
100	F12NE-4753-054	. . Nut (Superseded by MS17825-5)	1	X	X	X	X	X	X	X
110	MS24665-151	. . Pin	2	X	X	X	X	X	X	X
110	AN381-2-8	. . Pin (Superseded by MS24665-151)	2	X	X	X	X	X	X	X
120	28-13279-1	. . Spring	1	X	X	X	X	X	X	X
130	28-13255-1	. . Assembly, End Cap	1	X	X	X	X	X	X	X
140	07DU08	. . . Bushing, DU, 0.438" (0.500")	1	X	X	X	X	X	X	X
150	28-13263-1	. . Adapter	1	X	X	X	X	X	X	X
160	AN316-5R	. . Nut	2	X	X	X	X	X	X	X
170	02-691-04	. . Bearing, Rod-End, 1/4" Female	1	X	X	X	X	X	X	X
–	AEROSHELL 22	. Grease: Aeroshell #22 Cartridge	A/R	X	X	X	X	X	X	X
–	MS20995C32	. Wire	A/R	X	X	X	X	X	X	X
–	VC-3	. Sealant: Thread, Vibra-Tite	A/R	X	X	X	X	X	X	X

Visit www.enstromhelicopter.com for instructions to order an original manual and to register for email notification updates.

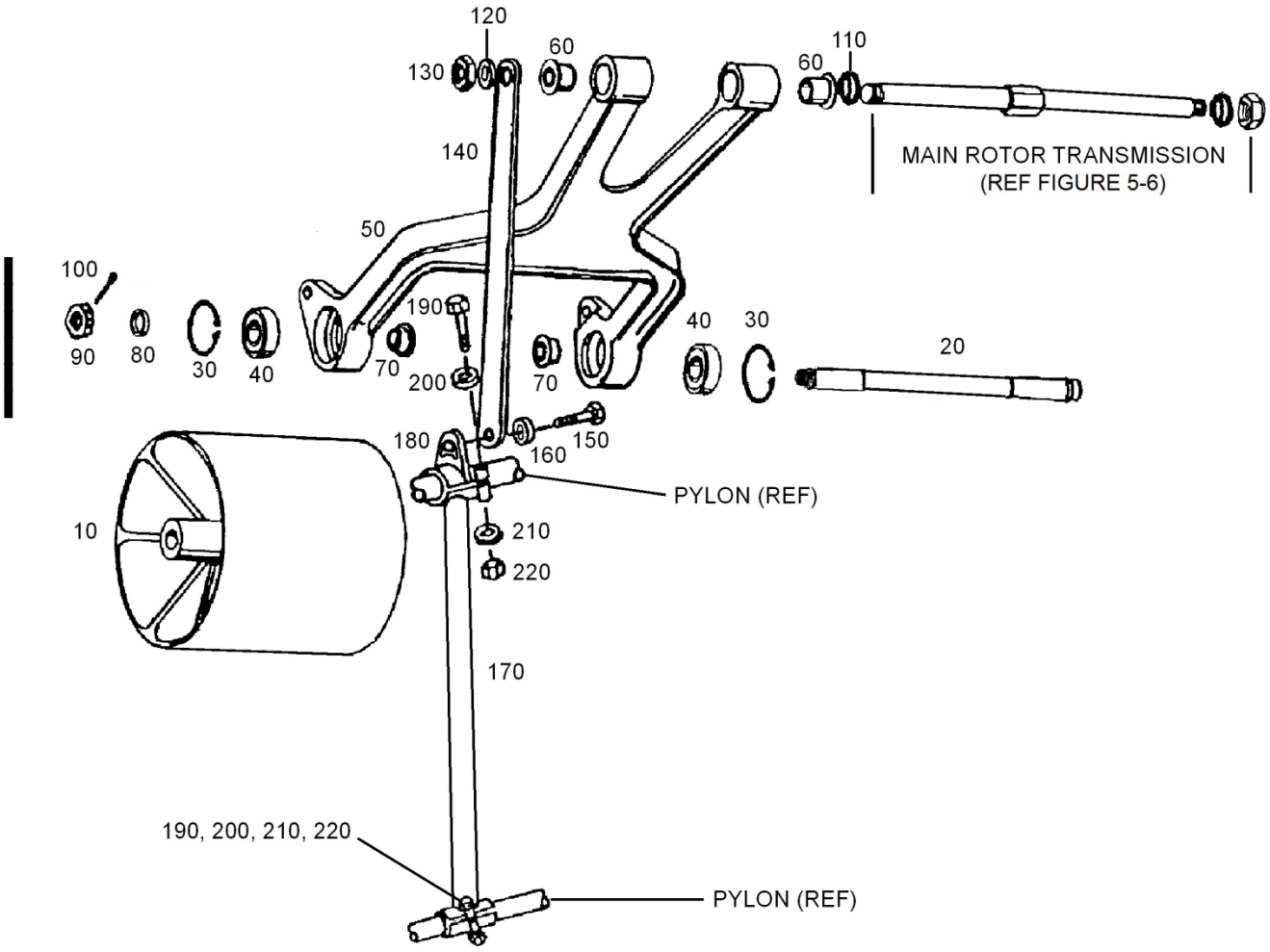

Sheet 1 of 2

FIGURE 5-3. IDLER PULLEY AND SUPPORT ASSEMBLY

UNCONTROLLED COPY WHEN DOWNLOADED OR PRINTED
Visit www.enstromhelicopter.com for instructions to order an original manual and to register for email notification updates.

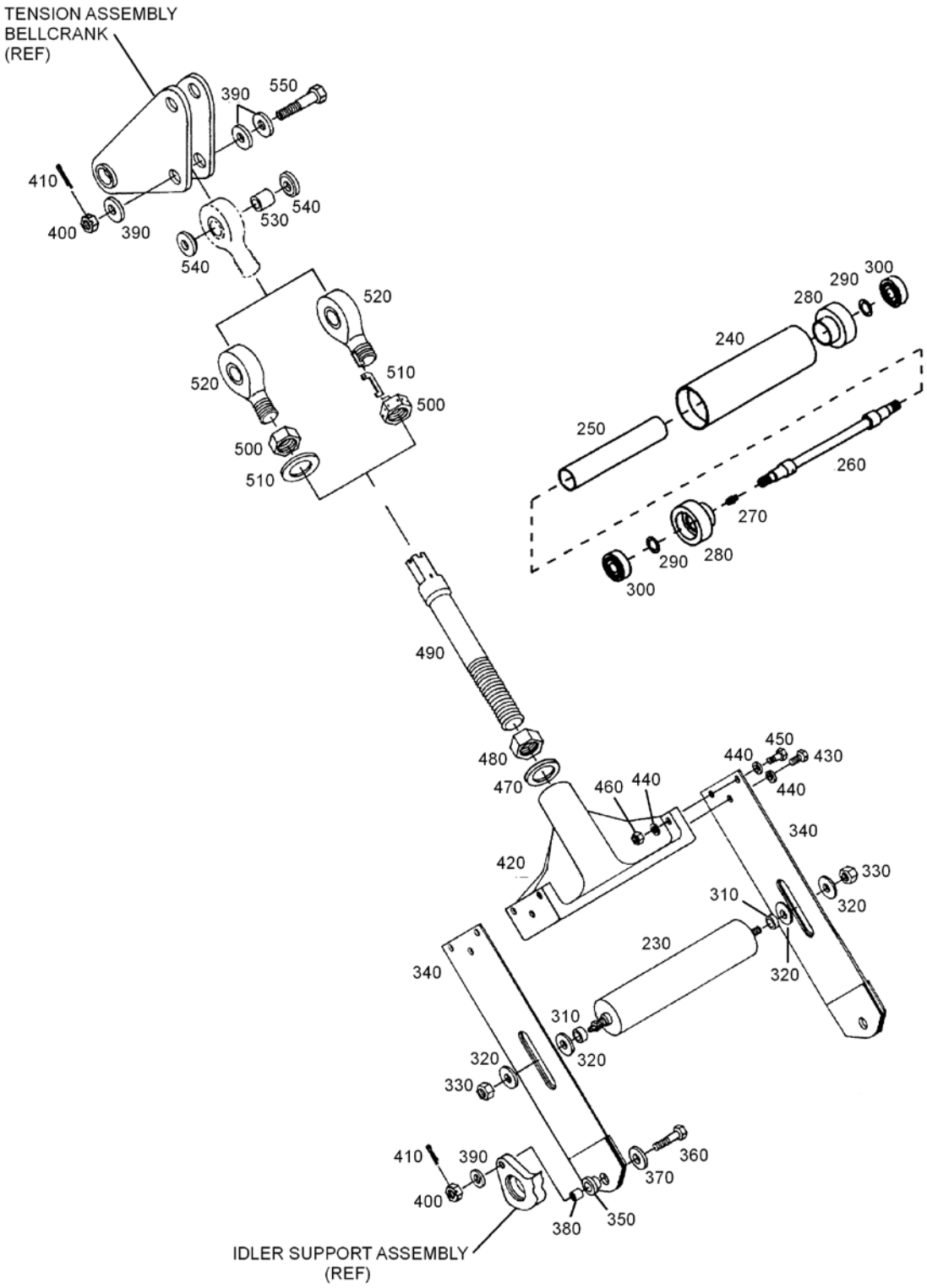

Sheet 2 of 2

FIGURE 5-3. IDLER PULLEY AND SUPPORT ASSEMBLY

UNCONTROLLED COPY WHEN DOWNLOADED OR PRINTED
Visit www.enstromhelicopter.com for instructions to order an original manual and to register for email notification updates.

FIGURE 5-3. IDLER PULLEY AND SUPPORT ASSEMBLY

ITEM NUMBER	PART NUMBER	DESCRIPTION	QTY PER ASSY	MODELS AFFECTED						
				F-28A	280	F-28C	280C	F-28F	280F	280FX
–	28-132020-903	Pulley Idler/Support System Drive	REF	X	X	X	X	X	X	X
–	28-132020-904	. Idler Pulley And Yoke Assembly	1	X	X	X	X	X	X	X
10▲	28-13229-1	. . Idler - Machined	1	X	X	X	X	X	X	X
20▲	28-13230-1	. . Shaft, Idler	1	X	X	X	X	X	X	X
30	N5000-137-S-PP	. . Ring (0.050")	2	X	X	X	X	X	X	X
40	ECD018-11	. . Bearing (1.378")	2	X	X	X	X	X	X	X
50	28-13292-1	. . Yoke - Assembly	1	X	X	X	X	X	X	X
60	28-13292-4	. . . Bearing (Flanged Bushing)	2	X	X	X	X	X	X	X
70	28-13233-1	. . Spacer - Idler	2	X	X	X	X	X	X	X
80	28-13234-1	. . Washer	1	X	X	X	X	X	X	X
90	AN320-8	. . Nut	1	X	X	X	X	X	X	X
100	MS24665-304	. . Pin	1	X	X	X	X	X	X	X
110	28-13238-1	. Spacer	1	X	X	X	X	X	X	X
120	AN960C816	. Washer	1	X	X	X	X	X	X	X
130	AN364-820A	. Nut	1	X	X	X	X	X	X	X
140	28-13313-1	. Idler Stabilizer Strut	1	X	X	X	X	X	X	X
150	AN4-5A	. Bolt	1	X	X	X	X	X	X	X
160	NAS1149C0463R	. Washer	1	X	X	X	X	X	X	X
160	AN960-416	. Washer (Superseded by NAS1149C0463R)	1	X	X	X	X	X	X	X
170	28-13316-1	. Brace Assembly	1	X	X	X	X	X	X	X
180	28-13316-913	. . Clamp Half	1	X	X	X	X	X	X	X
–	NAJ5-048	. . . Nut Plate	1	X	X	X	X	X	X	X
–	CCR264SS-3-03	. . . Rivet	2	X	X	X	X	X	X	X
190	AN3-11A	. Bolt	4	X	X	X	X	X	X	X
200	NAS1149F0332P	. Washer	4	X	X	X	X	X	X	X
200	AN960-10L	. Washer (Superseded by NAS1149F0332P)	4	X	X	X	X	X	X	X
210	NAS1149F0363P	. Washer (0.063")	4	X	X	X	X	X	X	X
210	AN960-10	. Washer (Superseded by NAS1149F0363P)	4	X	X	X	X	X	X	X

UNCONTROLLED COPY WHEN DOWNLOADED OR PRINTED

Visit www.enstromhelicopter.com for instructions to order an original manual and to register for email notification updates.

FIGURE 5-3. IDLER PULLEY AND SUPPORT ASSEMBLY

ITEM NUMBER	PART NUMBER	DESCRIPTION	QTY PER ASSY	MODELS AFFECTED						
				F-28A	280	F-28C	280C	F-28F	280F	280FX
220	MS21044N3	. Nut	4	X	X	X	X	X	X	X
220	AN365-1032A	. Nut (Superseded by MS21044N3)	4	X	X	X	X	X	X	X
230	28-13245-901	. Roller Pulley Idler System Drive	1	X	X	X	X	X	X	X
240	28-13297-1	. . Roller	1	X	X	X	X	X	X	X
250	28-13248-1	. . Sleeve	1	X	X	X	X	X	X	X
260▲	28-13246-1	. . Shaft	1	X	X	X	X	X	X	X
270	1728-B	. . Fitting, Grease, Drive (3/16")	1	X	X	X	X	X	X	X
280	28-13296-1	. . End Cap	2	X	X	X	X	X	X	X
290	28-13282-3	. . Shim – Bearing (0.010")	A/R	X	X	X	X	X	X	X
290	28-13282-4	. . Shim – Bearing (0.005”)	A/R	X	X	X	X	X	X	X
290	28-13282-5	. . Shim – Bearing (0.002")	A/R	X	X	X	X	X	X	X
300	ECD036-11	. . Bearing (.4724" Radius With Shield)	2	X	X	X	X	X	X	X
300	201NP	. . Bearing (Superseded by ECD036-11)	2	X	X	X	X	X	X	X
310	28-13278-1	. . Spacer	2	X	X	X	X	X	X	X
320	3/8 Harper	. . Washer	4	X	X	X	X	X	X	X
330	MS21083N6	. . Nut	2	X	X	X	X	X	X	X
330	AN364-624A	. . Nut (Superseded By MS21083N6)	2	X	X	X	X	X	X	X
340	28-13318-7	. Actuator Arm Assembly	2	X	X	X	X	X	X	X
340	28-13318-1	. Actuator (Obsolete)	2	X	X	X	X			
350	28-16311-1	. . Bushing	1	X	X	X	X	X	X	X
360	AN4-11	. Bolt	2	X	X	X	X	X	X	X
370	1/4 Harper	. Washer	2	X	X	X	X	X	X	X
380	28-132008-11	. Spacer	2	X	X	X	X	X	X	X
390	NAS1149F0463P	. Washer (0.063”)	5	X	X	X	X	X	X	X
390	AN960-416	. Washer (Superseded by NAS1149F0463P)	5	X	X	X	X	X	X	X

Visit www.enstromhelicopter.com for instructions to order an original manual and to register for email notification updates.

FIGURE 5-3. IDLER PULLEY AND SUPPORT ASSEMBLY

ITEM NUMBER	PART NUMBER	DESCRIPTION	QTY PER ASSY	MODELS AFFECTED						
				F-28A	280	F-28C	280C	F-28F	280F	280FX
400	MS17825-4	. Nut (0.281")	3	X	X	X	X	X	X	X
400	F12NE-4753-048	. Nut (Superseded By MS17825-4)	3	X	X	X	X	X	X	X
410	MS24665-151	. Pin	3	X	X	X	X	X	X	X
410	AN381-2-8	. Pin (Superseded by MS24665-151)	3	X	X	X	X	X	X	X
420	28-13299-3	. Yoke End	1	X	X	X	X	X	X	X
420	28-13299-1	. Yoke End (Superseded by 28-13299-3)	1	X	X	X	X	X	X	X
430	MS20074-03-04	. Bolt	2	X	X	X	X	X	X	X
430	AN73A3	. Bolt (Used With 28-13318-1)	2	X	X	X	X			
440	NAS1149F0332P	. Washer	10	X	X	X	X	X	X	X
440	AN960-10L	. Washer (Superseded by NAS1149F0332P)	10	X	X	X	X	X	X	X
450	AN3H6A	. Bolt	4	X	X	X	X	X	X	X
450	AN3H-5A	. Bolt (Used With 28-13318-1)	4	X	X	X	X			
460	MS21083N3	. Nut	4	X	X	X	X	X	X	X
460	AN364-1032A	. Nut (Superseded by MS21083N3)	4	X	X	X	X	X	X	X
470	NAS1149C1290R	. Washer	1	X	X	X	X	X	X	X
470	AN960C1216	. Washer (Superseded by NAS1149C1290R)	1	X	X	X	X	X	X	X
480	AN316-12R	. Nut	1	X	X	X	X	X	X	X
–	28-132005-3	. Shaft Assembly (With Type “A” Lock)	1	X	X	X	X	X	X	X
–	28-132005-1	. Shaft Assembly (Superseded by 28-132005-3)	1	X	X	X	X			
490	28-132005-11	. . Shaft	1	X	X	X	X	X	X	X
500	NAS509-8	. . Nut	1	X	X	X	X	X	X	X
500	AN316-8R	. . Nut (Used with 28-132005-1)	1	X	X	X	X			
510	NAS559-3	. . Lock – Rod End	1	X	X	X	X	X	X	X
510	28-14248-1	. . Washer (Used With 28-132005-1)	1	X	X	X	X			

UNCONTROLLED COPY WHEN DOWNLOADED OR PRINTED

Visit www.enstromhelicopter.com for instructions to order an original manual and to register for email notification updates.

FIGURE 5-3. IDLER PULLEY AND SUPPORT ASSEMBLY

ITEM NUMBER	PART NUMBER	DESCRIPTION	QTY PER ASSY	MODELS AFFECTED						
				F-28A	280	F-28C	280C	F-28F	280F	280FX
520	ECD091-1	. . Rod End Bearing	1	X	X	X	X	X	X	X
520	01-824-08E-011	. . Bearing (Superseded By ECD091-1)	1	X	X	X	X	X	X	X
520	MS21242S8K	. . Bearing (Superseded by M81935/1-08K)	1	X	X	X	X	X	X	X
520	09455-01-824-08E-011	. . Bearing (Alternate)	1	X	X	X	X	X	X	X
520	MTK8	. . Bearing (Alternate)	1	X	X	X	X	X	X	X
520	ASMK8T	. . Bearing (Alternate)	1	X	X	X	X	X	X	X
520	M81935/1-08K	. . Bearing (Alternate)	1	X	X	X	X	X	X	X
530	28-132006-11	. Spacer	1	X	X	X	X	X	X	X
540	28-132009-11	. Spacer	2	X	X	X	X	X	X	X
550	AN4-14	. Bolt	1	X	X	X	X	X	X	X

▲ Available as a remanufactured part. Add a “-R” to the end of the part number when ordering.

UNCONTROLLED COPY WHEN DOWNLOADED OR PRINTED
Visit www.enstromhelicopter.com for instructions to order an original manual and to register for email notification updates.

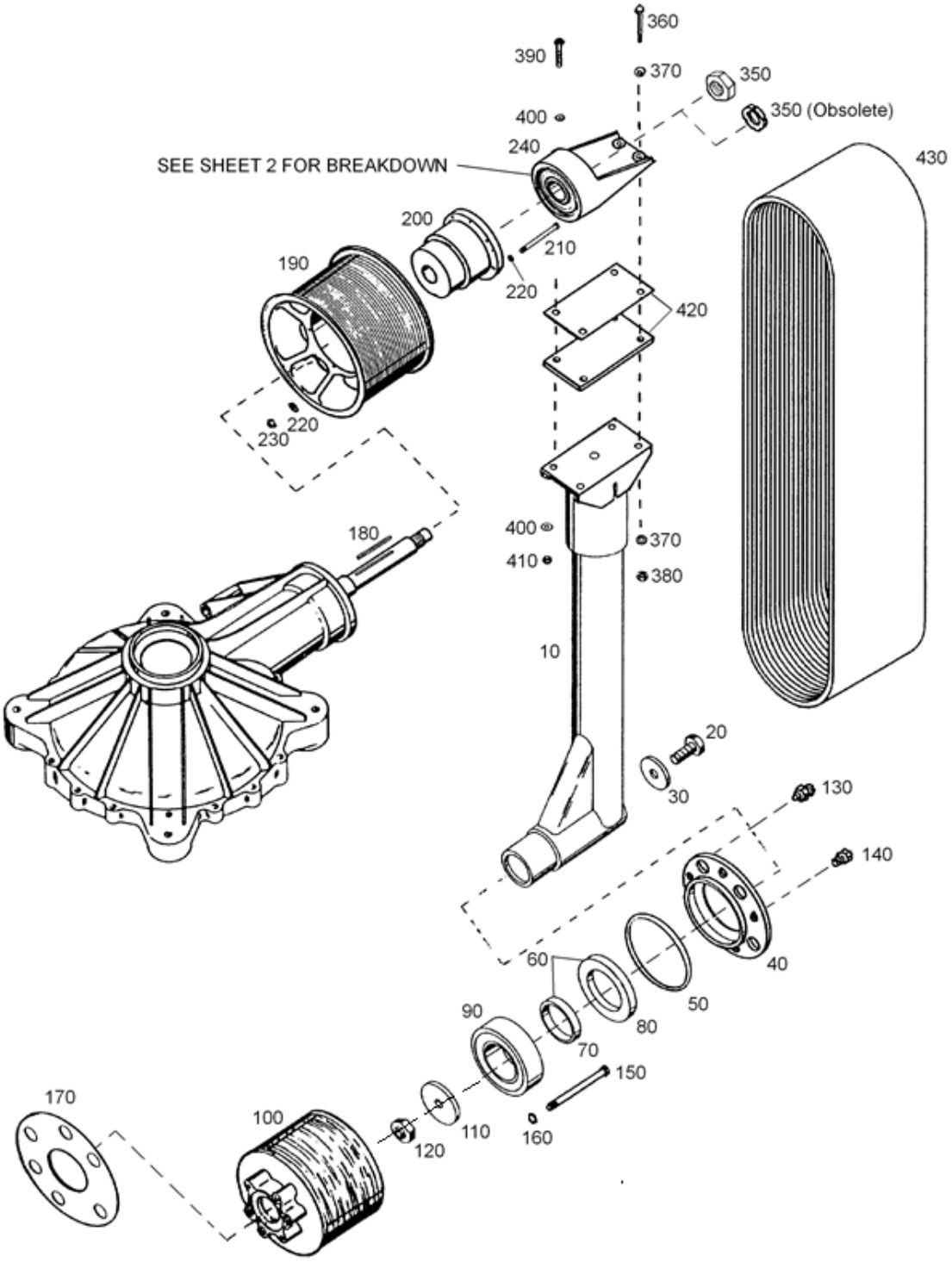

Sheet 1 of 2

FIGURE 5-4. JACK STRUT AND PULLEY ASSEMBLY

UNCONTROLLED COPY WHEN DOWNLOADED OR PRINTED

Visit www.enstromhelicopter.com for instructions to order an original manual and to register for email notification updates.

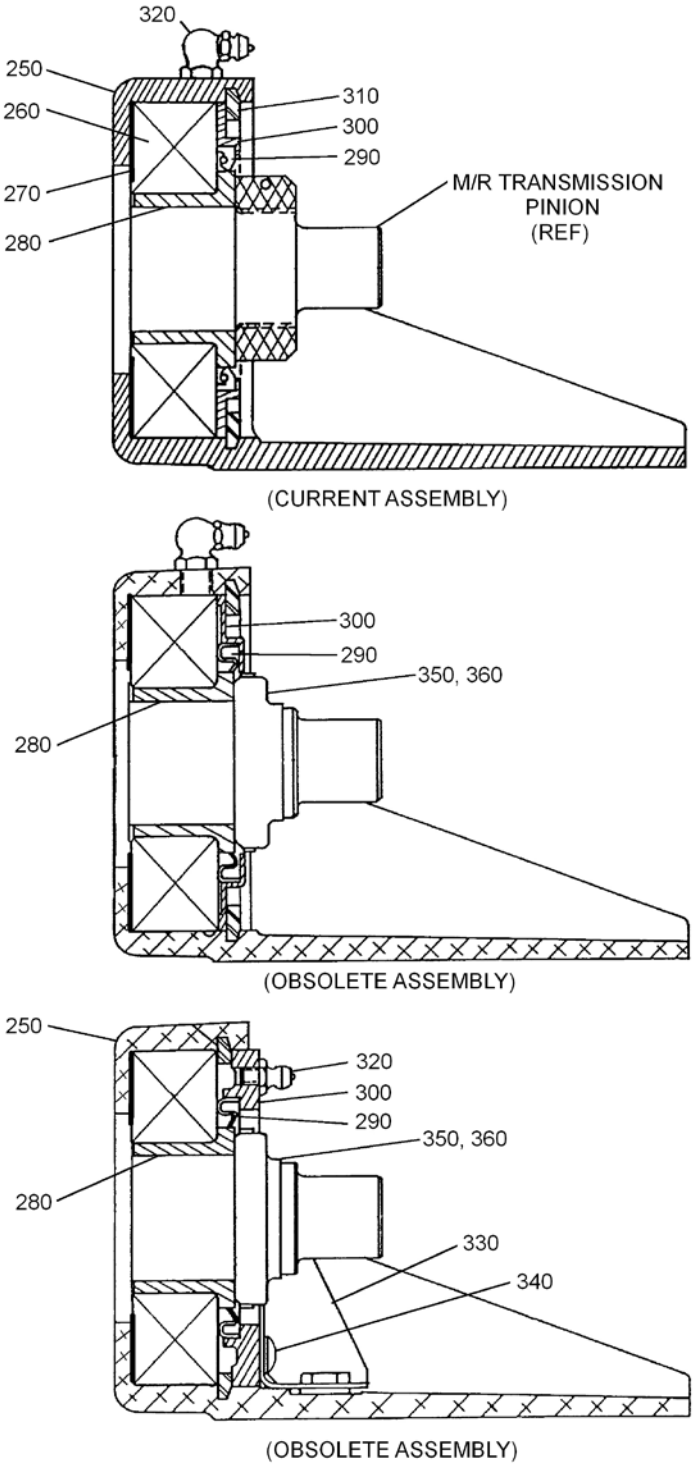

BEARING HOUSING ASSEMBLIES

Sheet 2 of 2

FIGURE 5-4. JACK STRUT AND PULLEY ASSEMBLY

UNCONTROLLED COPY WHEN DOWNLOADED OR PRINTED
Visit www.enstromhelicopter.com for instructions to order an original manual and to register for email notification updates.

FIGURE 5-4. JACK STRUT AND PULLEY ASSEMBLY

ITEM NUMBER	PART NUMBER	DESCRIPTION	QTY PER ASSY	MODELS AFFECTED						
				F-28A	280	F-28C	280C	F-28F	280F	280FX
10	28-13227-5	. Strut Assembly	1	X	X	X	X	X	X	X
20	AN8-10A	. Bolt	1	X	X	X	X	X	X	X
30	28-13212-1	. Washer	1	X	X	X	X	X	X	X
40	28-13305-1	. Retainer W.R. Bearing	1	X	X	X	X	X	X	X
50	AS3578-152	. O-Ring (0.103")	1	X	X	X	X	X	X	X
50	MS9021-152	. O-Ring (Superseded By AS3578-152)	1	X	X	X	X	X	X	X
60	28-13319-1	. Seal	1	X	X	X	X	X	X	X
70	28-13211-1	. . Spacer	1	X	X	X	X	X	X	X
80	7361	. . Seal, Oil, 2.000" (3.062")	1	X	X	X	X	X	X	X
90	ECD020-13	. Bearing	1	X	X	X	X	X	X	X
90	ECD020-11	. Bearing (Superseded by ECD020-13)	1	X	X	X	X	X	X	X
100Δ	28-13300-13	. Pulley	1					X	X	X
100●	28-13273-13	. Driver Pulley	1	X	X			X	X	X
100	28-13273-1	. Pulley (Superseded by 28-13273-13)	1	X	X					
100Δ	28-132010-13	. Pulley	1			X	X			
100	28-132001-13	. Pulley	1			X	X			
100	28-132001-11	. Pulley (Superseded by 28-132001-13)	1			X	X			
110	28-13210-13	. Washer	1	X	X	X	X	X	X	X
120	AN364-820A	. Nut	1	X	X	X	X	X	X	X
130	1650	. Fitting: Grease, STR (1/8"NPT)	1	X	X	X	X	X	X	X
140	338382	. Fitting, Grease, 1/8" PTF	1	X	X	X	X	X	X	X
140	306590	. Fitting, Grease, 1/8" PTF (Superseded by 338382)	1	X	X	X	X	X	X	X
150	28-13306-1	. Bolt	6	X	X	X	X	X	X	X
150	AN178H-65A	. Bolt (Superseded by 28-13306-1)	6	X	X	X	X	X	X	X
150	AN178H-66A	. Bolt (Superseded by 28-13306-1)	A/R	X	X	X	X	X	X	X
150	AN178H-67A	. Bolt (Superseded by 28-13306-1)	A/R	X	X	X	X	X	X	X
150	AN178H-70A	. Bolt (Superseded by 28-13306-1)	A/R	X	X	X	X	X	X	X

UNCONTROLLED COPY WHEN DOWNLOADED OR PRINTED

Visit www.enstromhelicopter.com for instructions to order an original manual and to register for email notification updates.

FIGURE 5-4. JACK STRUT AND PULLEY ASSEMBLY

ITEM NUMBER	PART NUMBER	DESCRIPTION	QTY PER ASSY	MODELS AFFECTED						
				F-28A	280	F-28C	280C	F-28F	280F	280FX
160	NAS1149F0863P	. Washer (0.063")	6	X	X	X	X	X	X	X
160	AN960-816	. Washer (Superseded by NAS1149F0863P)	6	X	X	X	X	X	X	X
170	28-13231-3	. Shim (0.020")	A/R	X	X	X	X	X	X	X
170	28-13231-4	. Shim (0.032")	A/R	X	X	X	X	X	X	X
170	28-13231-5	. Shim (0.040")	A/R	X	X	X	X	X	X	X
170	28-13231-6	. Shim (0.050")	A/R	X	X	X	X	X	X	X
170	28-13231-7	. Shim (0.125")	A/R	X	X	X	X	X	X	X
180●	28-13142-1	. Key	1	X	X	X	X	X	X	X
–	28-13170-905	. Clutch And Pulley Assembly	1	X	X	X	X	X	X	X
190●	28-13271-1	. . Pulley	1	X	X	X	X	X	X	X
200●	28-13401-4	. . Clutch	1	X	X	X	X	X	X	X
–	CL30914-2	. . . Seal: Fill, Clutch Oil	3	X	X	X	X	X	X	X
210	AN5-35A	. . Bolt	6	X	X	X	X	X	X	X
220	NAS1149F0563P	. . Washer (0.063")	12	X	X	X	X	X	X	X
220	AN960-516	. . Washer (Superseded by NAS1149F0563P)	12	X	X	X	X	X	X	X
230	MS21083N5	. Nut	6	X	X	X	X	X	X	X
230	AN364-524A	. . Nut (Superseded By MS21083N5)	6	X	X	X	X	X	X	X
240●	28-13170-903	. Bearing Housing Assembly	1	X	X	X	X	X	X	X
250●	28-13215-3	. . Bearing Housing	1	X	X	X	X	X	X	X
250	28-13215-1	. . Bearing Housing (Obsolete)	1	X	X	X	X			
260	ECD014-11	. . Bearing	1	X	X	X	X	X	X	X
260	ECD014-13	. . Bearing (1.5748") (Used with 28-13215-1 Bearing Housing)	1	X	X	X	X			
270●	28-13180-11	. . Shield	1	X	X	X	X	X	X	X
280●	28-13323-11	. . Bearing Adapter	1	X	X	X	X	X	X	X
280	28-13129-13	. . Adapter-Bearing (Obsolete)	1	X	X	X	X			
290	20526	. . Seal: Oil, 2.063" (2.661")	1	X	X	X	X	X	X	X

UNCONTROLLED COPY WHEN DOWNLOADED OR PRINTED

Visit www.enstromhelicopter.com for instructions to order an original manual and to register for email notification updates.

FIGURE 5-4. JACK STRUT AND PULLEY ASSEMBLY

ITEM NUMBER	PART NUMBER	DESCRIPTION	QTY PER ASSY	MODELS AFFECTED						
				F-28A	280	F-28C	280C	F-28F	280F	280FX
290	340823	. . Seal (Obsolete)	1	X	X	X	X			
300●	28-13322-11	. . Retainer	1	X	X	X	X	X	X	X
300	28-13181-11	. . Seal Retainer (Obsolete)	1	X	X	X	X			
300	28-13303-11	. . Seal Retainer (Obsolete)	1	X	X	X	X			
310	N5002-354-S-PP	. . Ring	1	X	X	X	X	X	X	X
320	1911-B	. . Fitting, Grease (1/4-28)	1	X	X	X	X	X	X	X
320	1641-B	. . Fitting (1/4-28)	1	X	X	X	X			
330	28-13182-11	. . Angle	1	X	X	X	X			
330	28-13182-1	. . Angle (Obsolete)	1	X	X	X	X			
340	AN526-632R4	. . Screw	3	X	X	X	X			
350●	28-13184-11	. Nut	1	X	X	X	X	X	X	X
350	SLN-3045	. Nut (Obsolete)	1	X	X	X	X			
–	SLW-3045	. Locking Ring (Obsolete)	1	X	X	X	X			
360	AN6-10A	. Bolt	2	X	X	X	X	X	X	X
370	NAS1149F0632P	. Washer	4	X	X	X	X	X	X	X
370	AN960-616L	. Washer (Superseded by NAS1149F0632P)	4	X	X	X	X	X	X	X
380	MS21044N6	. Nut	2	X	X	X	X	X	X	X
380	AN365-624A	. Nut (Superseded by MS21044N6)	2	X	X	X	X	X	X	X
390	AN4-7A	. Bolt	2	X	X	X	X	X	X	X
400	NAS1149F0463P	. Washer (0.063)	4	X	X	X	X	X	X	X
400	AN960-416	. Washer (Superseded By NAS1149F0463P)	4	X	X	X	X	X	X	X
410	MS21044N4	. Nut	2	X	X	X	X	X	X	X
410	AN365-428A	. Nut (Superseded by MS21044N4)	2	X	X	X	X	X	X	X
420	28-13281-3	. Shim (0.090")	A/R	X	X	X	X	X	X	X
420	28-13281-4	. Shim (0.060")	A/R	X	X	X	X	X	X	X
420	28-13281-5	. Shim (0.032")	A/R	X	X	X	X	X	X	X
430*	28-13321-17	. Belt (Alternate to 28-13321-15)	1	X	X			X	X	X

Visit www.enstromhelicopter.com for instructions to order an original manual and to register for email notification updates.

FIGURE 5-4. JACK STRUT AND PULLEY ASSEMBLY

ITEM NUMBER	PART NUMBER	DESCRIPTION	QTY PER ASSY	MODELS AFFECTED						
				F-28A	280	F-28C	280C	F-28F	280F	280FX
430*	28-13321-15	. Belt	1	X	X			X	X	X
430	28-13321-13	. Belt (Superseded by 28-13321-15)	1	X	X			X	X	X
430	28-13321-11	. Belt (Superseded by 28-13321-13)	1	X	X			X	X	X
430	28-13302-13	. Belt	1			X	X			
430	28-13302-11	. Belt (Superseded by 28-13321-13)	1			X	X			
430	28-13302-1	. Belt (Superseded by 28-13321-13)	1			X	X			

* Either belt may be used on the F28F and the 280FX. Effectivity F28F S/N 831 and subsequent. Effectivity 280FX S/N 2136 and subsequent. Retrofittable to F28F S/N 509 and 280FX S/N 2001.

● Available as a remanufactured part. Add a "-R" to the end of the part number when ordering.

Δ For helicopters equipped with Wet/Dry Dispersal System.

UNCONTROLLED COPY WHEN DOWNLOADED OR PRINTED

Visit www.enstromhelicopter.com for instructions to order an original manual and to register for email notification updates.

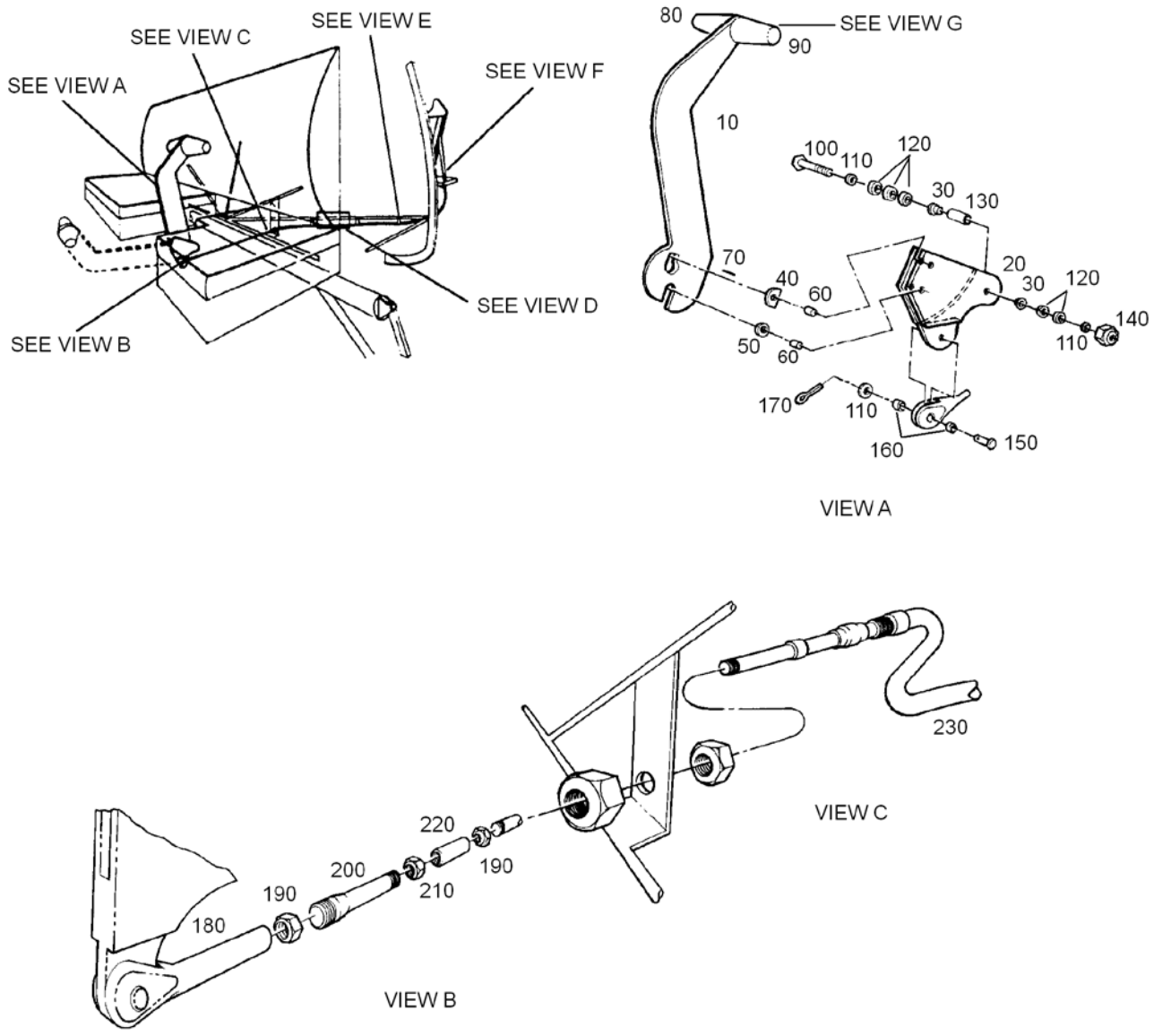

Sheet 1 of 2

FIGURE 5-5. MAIN DRIVE ENGAGEMENT CONTROL SYSTEM

UNCONTROLLED COPY WHEN DOWNLOADED OR PRINTED

Visit www.enstromhelicopter.com for instructions to order an original manual and to register for email notification updates.

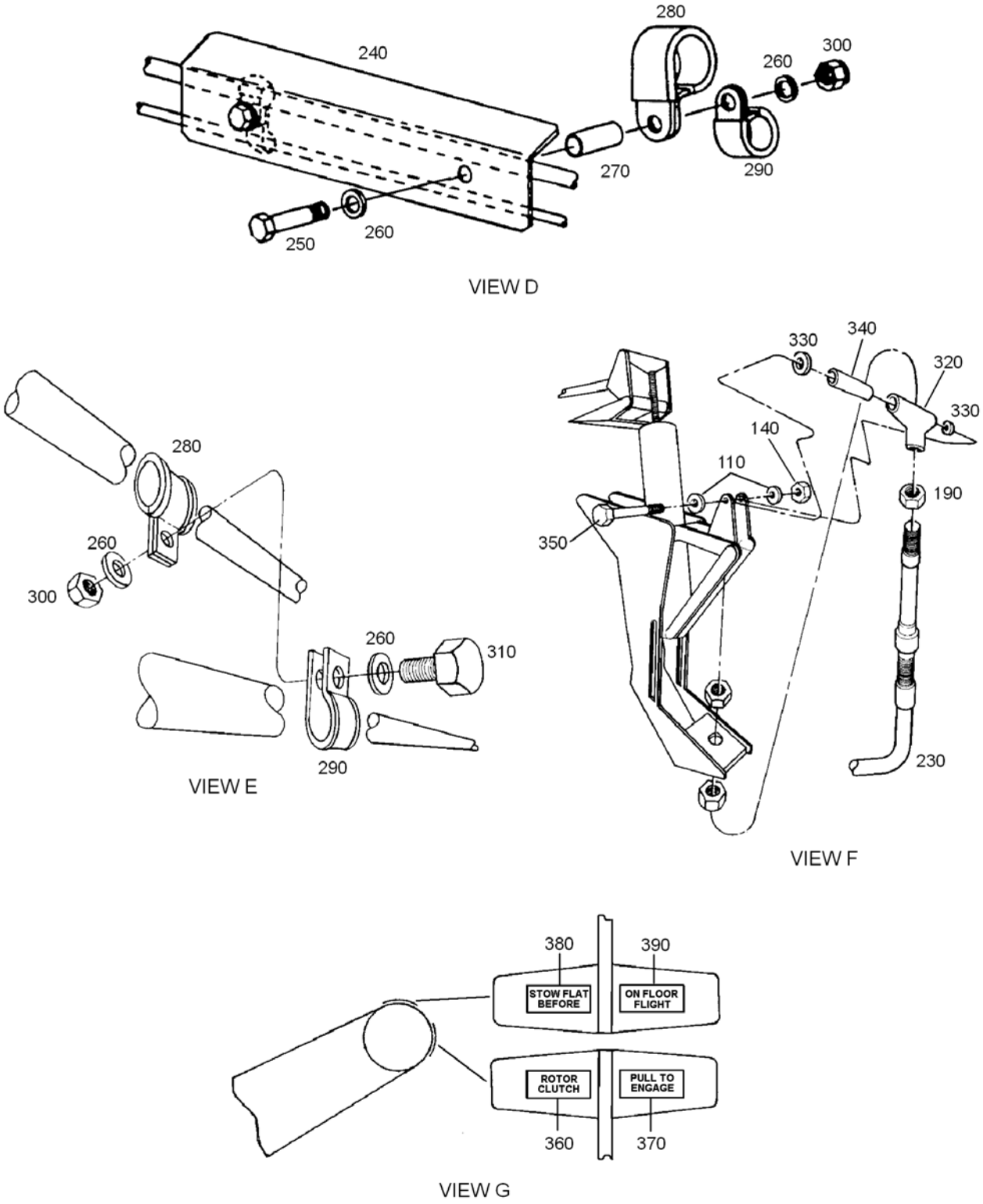

Sheet 2 of 2

FIGURE 5-5. MAIN DRIVE ENGAGEMENT CONTROL SYSTEM

UNCONTROLLED COPY WHEN DOWNLOADED OR PRINTED

Visit www.enstromhelicopter.com for instructions to order an original manual and to register for email notification updates.

FIGURE 5-5. MAIN DRIVE ENGAGEMENT CONTROL SYSTEM

ITEM NUMBER	PART NUMBER	DESCRIPTION	QTY PER ASSY	MODELS AFFECTED						
				F-28A	280	F-28C	280C	F-28F	280F	280FX
–	28-16523-1	. Lever Assembly	1	X	X	X	X	X	X	X
10◄	28-16516-13	. . Lever Arm	1	X	X	X	X	X	X	X
10	28-16516-1	. . Lever Arm (Superseded by 28-16516-13)	1	X	X	X	X	X	X	X
20	28-16515-1	. . Bellcrank Assembly	1	X	X	X	X	X	X	X
30	28-16515-3	. . . Bearing	2	X	X	X	X	X	X	X
40	28-16519-1	. . Guide	1	X	X	X	X	X	X	X
50	28-16520-1	. . Spacer	1	X	X	X	X	X	X	X
60	NAS561C8-10	. . Pin: Spring, 0.250" X 0.625" SS	2	X	X	X	X	X	X	X
60	79-048-250-0625	. . Roll Pin (Superseded by NAS561C8-10)	2	X	X	X	X	X	X	X
70	MS16562-213	. . Pin	1	X	X	X	X	X	X	X
70	59-022-094-0500	. . Roll Pin (Superseded by MS16562-213)	1	X	X	X	X	X	X	X
80	28-16521-11	. Handle	1	X	X	X	X	X	X	X
90	28-16522-1	. Handle Assembly	1	X	X	X	X	X	X	X
100	AN4-12A	. Bolt	1	X	X	X	X	X	X	X
110	NAS1149F0432P	. Washer	5	X	X	X	X	X	X	X
110	AN960-416L	. Washer (Superseded by NAS1149F0432P)	5	X	X	X	X	X	X	X
120	1/4 Harper	. Washer	5	X	X	X	X	X	X	X
130	28-16504-1	. Spacer	1	X	X	X	X	X	X	X
140	MS21083N4	. Nut	2	X	X	X	X	X	X	X
140	AN364-428A	. Nut (Superseded by MS21083N4)	2	X	X	X	X	X	X	X
150	AN394-17	. Pin	1	X	X	X	X	X	X	X
160	28-16518-1	. Spacer	2	X	X	X	X	X	X	X
170	MS24665-151	. Pin	1	X	X	X	X	X	X	X
170	AN381-2-8	. Pin (Superseded by MS24665-151)	1	X	X	X	X	X	X	X
180	AN665-46R	. Terminal	1	X	X	X	X	X	X	X
190	AN316-5R	. Nut	3	X	X	X	X	X	X	X
200	28-16505-1	. Tie Rod	1	X	X	X	X	X	X	X

UNCONTROLLED COPY WHEN DOWNLOADED OR PRINTED

Visit www.enstromhelicopter.com for instructions to order an original manual and to register for email notification updates.

FIGURE 5-5. MAIN DRIVE ENGAGEMENT CONTROL SYSTEM

ITEM NUMBER	PART NUMBER	DESCRIPTION	QTY PER ASSY	MODELS AFFECTED						
				F-28A	280	F-28C	280C	F-28F	280F	280FX
210	AN316-5L	. Nut	1	X	X	X	X	X	X	X
220	28-16506-1	. Coupling	1	X	X	X	X	X	X	X
230	4SN-188-C-73	. Cable: Clutch, 73" (High-Temp)	1	X	X	X	X	X	X	X
240	28-16542-11	. Heat Shield	1	X	X	X	X	X	X	X
250	AN3-12A	. Bolt	2	X	X	X	X	X	X	X
260	NAS1149F0332P	. Washer	8	X	X	X	X	X	X	X
260	AN960-10L	. Washer (Superseded by NAS1149F0332P)	8	X	X	X	X	X	X	X
270	NAS43HT3-48	. Spacer	2	X	X	X	X	X	X	X
280	MS21919WF16	. Clamp	4	X	X	X	X	X	X	X
290	AN742F8	. Clamp (SS)	4	X	X	X	X	X	X	X
290	RA4400-6-C	. Clamp (Superseded by AN742F8)	4	X	X	X	X	X	X	X
300	MS21083N3	. Nut	4	X	X	X	X	X	X	X
300	AN364-1032A	. Nut (Superseded by MS21083N3)	4	X	X	X	X	X	X	X
310	AN3-5A	. Bolt	2	X	X	X	X	X	X	X
320	28-13276-1	. Rod End	1	X	X	X	X	X	X	X
330	NAS1149F0463P	. Washer (.063”)	2	X	X	X	X	X	X	X
330	AN960-416	. Washer (Superseded By NAS1149F0463P)	2	X	X	X	X	X	X	X
340	28-13285-4	. Spacer	1	X	X	X	X	X	X	X
350	AN4-13A	. Bolt	1	X	X	X	X	X	X	X
360*	28-16525-1	. Placard (Rotor Clutch)	1	X	X	X	X	X	X	X
370*	28-16526-1	. Placard (Pull to Engage)	1	X	X	X	X	X	X	X
380**	28-16537-11	. Placard (Stow Flat Before)	1	X	X	X	X	X	X	X
390**	28-16537-13	. Placard (On Floor Flight)	1	X	X	X	X	X	X	X

* Order these two placards together.





** Order these two placards together.





▌ ◄ Effective F28F S/N 833 and subsequent, 280FX S/N 2172 and subsequent. Retrofittable all S/N F28/280/A/C/F.

UNCONTROLLED COPY WHEN DOWNLOADED OR PRINTED

Visit www.enstromhelicopter.com for instructions to order an original manual and to register for email notification updates.

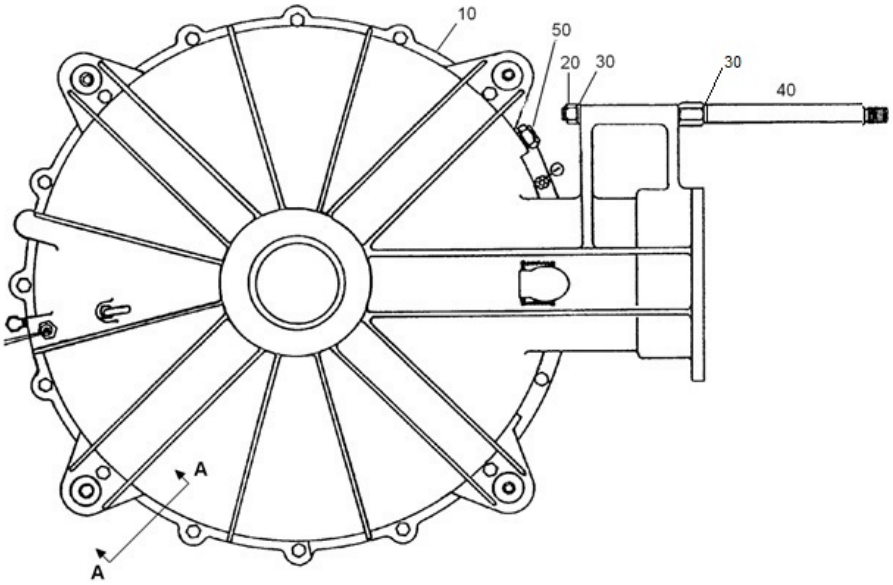

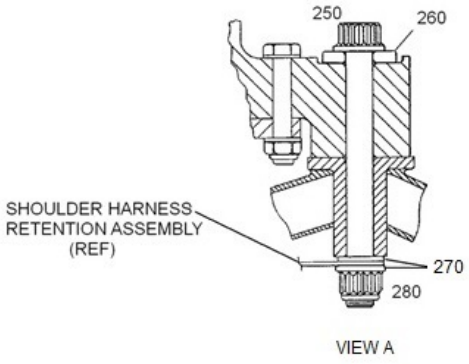

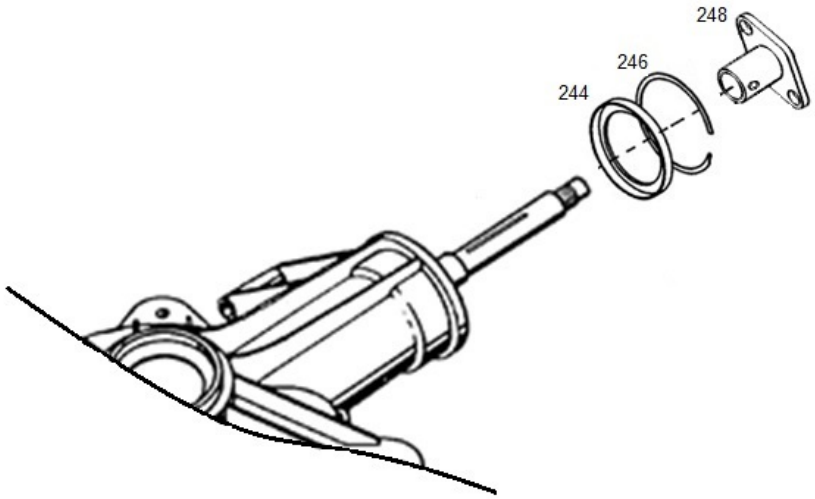

Sheet 1 of 2

FIGURE 5-6. MAIN ROTOR GEARBOX INSTALLATION

UNCONTROLLED COPY WHEN DOWNLOADED OR PRINTED

Visit www.enstromhelicopter.com for instructions to order an original manual and to register for email notification updates.

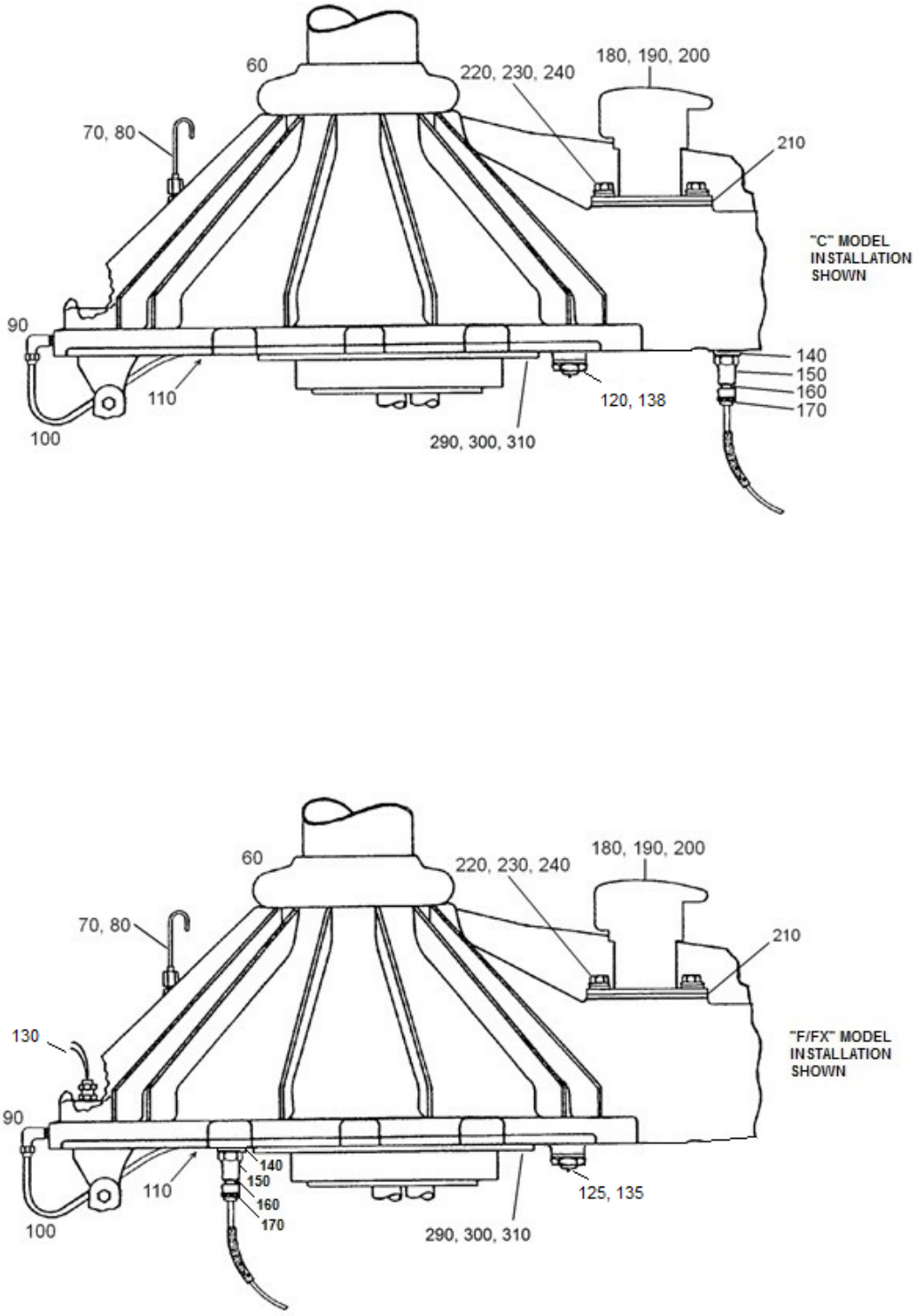

Sheet 2 of 2

FIGURE 5-6. MAIN ROTOR GEARBOX INSTALLATION

Visit www.enstromhelicopter.com for instructions to order an original manual and to register for email notification updates.

INTENTIONALLY LEFT BLANK

UNCONTROLLED COPY WHEN DOWNLOADED OR PRINTED
Visit www.enstromhelicopter.com for instructions to order an original manual and to register for email notification updates.

FIGURE 5-6. MAIN ROTOR GEARBOX INSTALLATION

ITEM NUMBER	PART NUMBER	DESCRIPTION	QTY PER ASSY	MODELS AFFECTED						
				F-28A	280	F-28C	280C	F-28F	280F	280FX
10	28-13170-3	. Main Rotor Gearbox (Light M/R Shaft)	1	X	X					
10**	28-13170-7	. Main Rotor Gearbox (Heavy M/R Shaft)	1			X	X			
10	28-13170-105	. Main Rotor Gearbox (Heavy M/R Shaft with Low Rotor RPM Probe)	1			X	X	X	X	X
10	28-13170-909	. Main Rotor Gearbox	1					X		X
10	28-13170-900	. Main Rotor Gearbox (Superseded by 28-13170-909)	1					X		X
10**	28-13170-103	. Main Rotor Gearbox Assembly (Superseded by 28-13170-900)	1					X		X
10**††	28-13170-9-R	. Main Rotor Gearbox Assembly (Magnetic Chip Detector and Low Rotor RPM Pick-Up)	1					X		X
10**††	28-13170-7-R	. Main Rotor Gearbox Assembly (Heavy M/R Shaft)	1			X	X	X	X	
10**††	28-13170-3-R	. Main Rotor Gearbox Assembly (Standard M/R Shaft)	1			X	X	X	X	
10††	28-13101-5-R	. Gearbox Assembly (Standard M/R Shaft)	1	X	X	X	X			
10††	28-13101-1-R	. Gearbox Assembly	1	X	X					
20	AN364-1018A	. . Nut	1	X	X	X	X	X	X	X
30	28-13238-1	. . Spacer	2	X	X	X	X	X	X	X
40■	28-13232-1	. . Shaft	1	X	X	X	X	X	X	X
50●●	2D8934	. . Plug, Sight, M.R.G.B. Oil Level	1	X	X	X	X	X	X	X
50●▲	M144E	. . Plug	1	X	X	X	X	X	X	X
50	S-50MP	. . Plug (Superseded by M144E)	1	X	X	X	X	X	X	X
60	28-13137-11	. . Slinger	1	X	X	X	X	X	X	X
60	28-13137-1	. . Slinger (Superseded by 28-13137-11)	1	X	X	X	X	X	X	X
70■	28-13148-1	. . Fitting	1	X	X	X	X	X	X	X
80■	28-13149-1	. . Vent Line Assembly	1	X	X	X	X	X	X	X
90	MS20822-6D	. . Elbow	1	X	X	X	X	X	X	X
100■	28-13177-1	. . Lubrication Tube	1	X	X	X	X	X	X	X

UNCONTROLLED COPY WHEN DOWNLOADED OR PRINTED

Visit www.enstromhelicopter.com for instructions to order an original manual and to register for email notification updates.

FIGURE 5-6. MAIN ROTOR GEARBOX INSTALLATION

ITEM NUMBER	PART NUMBER	DESCRIPTION	QTY PER ASSY	MODELS AFFECTED						
				F-28A	280	F-28C	280C	F-28F	280F	280FX
110	AN816-6D	. . Union (AL)	1	X	X	X	X	X	X	X
120	MS35769-9	. . Gasket (Used with CD7L)	1	X	X	X	X	X	X	X
120	AN900-8	. . Gasket (Superseded by MS35769-9)	1	X	X	X	X	X	X	
120	AN900-10	. . Gasket (Superseded by MS35769 - Used with 28-13170-9)	1					X		X
125	MS35769-11	. . Gasket (Used with 1B7536)	1					X		X
130■	726621	. . Magnetic Pickup (Used with 28-13170-101/103 and subsequent)	1					X		X
–	MS28778-4	. . . O-Ring (Used with 726621)	1					X		X
–	MS28778-3	. . . O-Ring (Superseded by MS28778-4)	1					X		X
–	AN316-6R	. . . Nut (Used with 726621)	1					X		X
–	28-16524-3	. . . Shim (0.020”)	A/R					X		X
–	28-16524-4	. . . Shim (0.015”)	A/R					X		X
–	28-16524-5	. . . Shim (0.005”)	A/R					X		X
–	28-16524-6	. . . Shim (0.003”)	A/R					X		X
–	28-16524-7	. . . Shim (0.002”)	A/R					X		X
–	28-16524-8	. . . Shim (0.001”)	A/R					X		X
135*■	1B7536	. . Chip Detector Assembly	1					X		X
–	21FA-540	. . . Nut (Used with 1B7536)	1					X		X
–	AN6227-6	. . . Packing (Used with 1B7536)	1					X		X
138■	CD7L	. . Detector Chip	1	X	X	X	X	X	X	
140	MS35769-6	. . Gasket	1	X	X	X	X	X	X	X
140	AN900-6	. . Gasket (Superseded by MS35769-6)	1	X	X	X	X	X	X	X
150■	28-13120-1	. . Adapter	1	X	X	X	X	X	X	X
160■	AN4076-1	. . Fitting	1	X	X	X	X	X	X	X
170	AA86146	. . Temperature Probe	1	X	X	X	X	X	X	X
170■	AN5546-1	. . Temperature Probe (Alternate)	1	X	X	X	X	X	X	X
170	102-00007	. . Temperature Probe (Alternate)	1	X	X	X	X	X	X	X

UNCONTROLLED COPY WHEN DOWNLOADED OR PRINTED

Visit www.enstromhelicopter.com for instructions to order an original manual and to register for email notification updates.

FIGURE 5-6. MAIN ROTOR GEARBOX INSTALLATION

ITEM NUMBER	PART NUMBER	DESCRIPTION	QTY PER ASSY	MODELS AFFECTED						
				F-28A	280	F-28C	280C	F-28F	280F	280FX
180■	28-13134-5	. . Filler Cap Assembly	1	X	X	X	X	X	X	X
190	F965	. . Strainer, Oil, M.R.G.B.	1	X	X	X	X	X	X	X
200	2-214	. . O-Ring, N304-75, 0.984" (0.139")	1	X	X	X	X	X	X	X
200	28775-214	. . O-Ring (Alternate)	1	X	X	X	X	X	X	X
210†	28-13107-15	. . Gasket	1	X	X	X	X	X	X	X
210	28-13107-13	. . Gasket (Superseded By 28-13107-15)	1	X	X	X	X	X	X	X
220	AN4-4A	. . Bolt	2	X	X	X	X	X	X	X
230	MS35338-44	. . Washer (0.062")	2	X	X	X	X	X	X	X
230	AN935-416	. . Washer (Superseded by MS35338-44)	2	X	X	X	X	X	X	X
240	NAS1149F0463P	. . Washer (.063)	2	X	X	X	X	X	X	X
240	AN960-416	. . Washer (Superseded by NAS1149F0463P)	2	X	X	X	X	X	X	X
–	13241-LDS	. . Seal (Mast, Upper)	1	X	X	X	X	X	X	X
–	28-13117-4	. . Shim (0.002”)	A/R	X	X	X	X	X	X	X
–	28-13117-5	. . Shim (0.003”)	A/R	X	X	X	X	X	X	X
–	28-13117-6	. . Shim (0.010”)	A/R	X	X	X	X	X	X	X
–	28-13117-7	. . Shim (0.020”)	A/R	X	X	X	X	X	X	X
–	28-13117-8	. . Shim (0.005”)	A/R	X	X	X	X	X	X	X
–	28-13117-9	. . Shim (0.0075”)	A/R	X	X	X	X	X	X	X
–	8473 H5L16	. . Seal (Mast, Lower)	2	X	X	X	X	X	X	X
–	8473RUPH5-L16	. . Seal (Mast, Lower) (Superseded by 8473 H5L16)	2	X	X	X	X	X	X	X
–	1540	. . Seal (Mast, Lower) (Superseded by 8473RUPH5-L16)	2	X	X	X	X	X	X	X
–	28-13113-4	. . Shim (0.002”)	A/R	X	X	X	X	X	X	X
–	28-13113-5	. . Shim (0.003”)	A/R	X	X	X	X	X	X	X
–	28-13113-6	. . Shim (0.010”)	A/R	X	X	X	X	X	X	X
–	28-13113-7	. . Shim (0.020”)	A/R	X	X	X	X	X	X	X
–	28-13113-8	. . Shim (0.005”)	A/R	X	X	X	X	X	X	X

UNCONTROLLED COPY WHEN DOWNLOADED OR PRINTED

Visit www.enstromhelicopter.com for instructions to order an original manual and to register for email notification updates.

FIGURE 5-6. MAIN ROTOR GEARBOX INSTALLATION

ITEM NUMBER	PART NUMBER	DESCRIPTION	QTY PER ASSY	MODELS AFFECTED						
				F-28A	280	F-28C	280C	F-28F	280F	280FX
–	28-13113-9	. . Shim (0.0075”)	A/R	X	X	X	X	X	X	X
244	1102	. . Seal, Oil (Pinion)	1	X	X	X	X	X	X	X
246	VH-375	. . Retaining Ring	1	X	X	X	X	X	X	X
248◊	28-13614-1	. . Coupling Hub	1	X	X	X	X	X	X	X
–	AN386-2-7A	. . Taper Pin	1	X	X	X	X	X	X	X
–	AN960-C10	. . Washer	1	X	X	X	X	X	X	X
–	AN365-1032A	. . Nut	1	X	X	X	X	X	X	X
250	MS21250-06042	. . Bolt	4	X	X	X	X	X	X	X
250	MS21250-06044	. . Bolt (Alternate)	4	X	X	X	X	X	X	X
260	28-13005-1	. . Washer	4	X	X	X	X	X	X	X
270	NAS1149F0663P	. . Washer	A/R	X	X	X	X	X	X	X
270	AN960-616	. . Washer (Superseded by NAS1149F0663P)	A/R	X	X	X	X	X	X	X
280	FN22M-624	. . Nut	4	X	X	X	X	X	X	X
–	MS20995C32	. Wire	A/R	X	X	X	X	X	X	X
290	AN4-17A	. Bolt	8	X	X	X	X	X	X	X
300	NAS1523-4E	. Stat-O-Seal	8	X	X	X	X	X	X	X
310	AN365-428	. Stop Nut, Elastic	8	X	X	X	X	X	X	X

* The outside half of the 1B7536 magnetic chip detector assembly is 1B7536-2.

** Gearbox assemblies 28-13170-1, -3, -7 are acceptable alternates for Models F-28A and 280. Gearbox assemblies 28-13170-9, -101,-103 are acceptable alternates for Models F-28A, F-28C, 280, 280C and 280F.

† Effectivity for all piston ships S/N 815 and S/N 2093 and subsequent.

● Effectivity for all piston ships S/N 816, S/N 2097 and subsequent.

†† “-R” Denotes Overhauled Main Rotor Gearbox.

■ Available as a remanufactured part. Add an “-R” to the end of the part number when ordering.

●● Effectivity F28F S/N 825 and subsequent. Effectivity 280FX S/N 2135 and subsequent. Retrofittable to F28F S/N 509 and 280FX S/N 2001.

▲ Effectivity F28F S/N 818 and subsequent. Effectivity 280FX S/N 2125 and subsequent. Retrofittable to F28F S/N 509 and 280FX S/N 2001.

◊ Refer to Figure 12-1 for installation illustration.

UNCONTROLLED COPY WHEN DOWNLOADED OR PRINTED

Visit www.enstromhelicopter.com for instructions to order an original manual and to register for email notification updates.

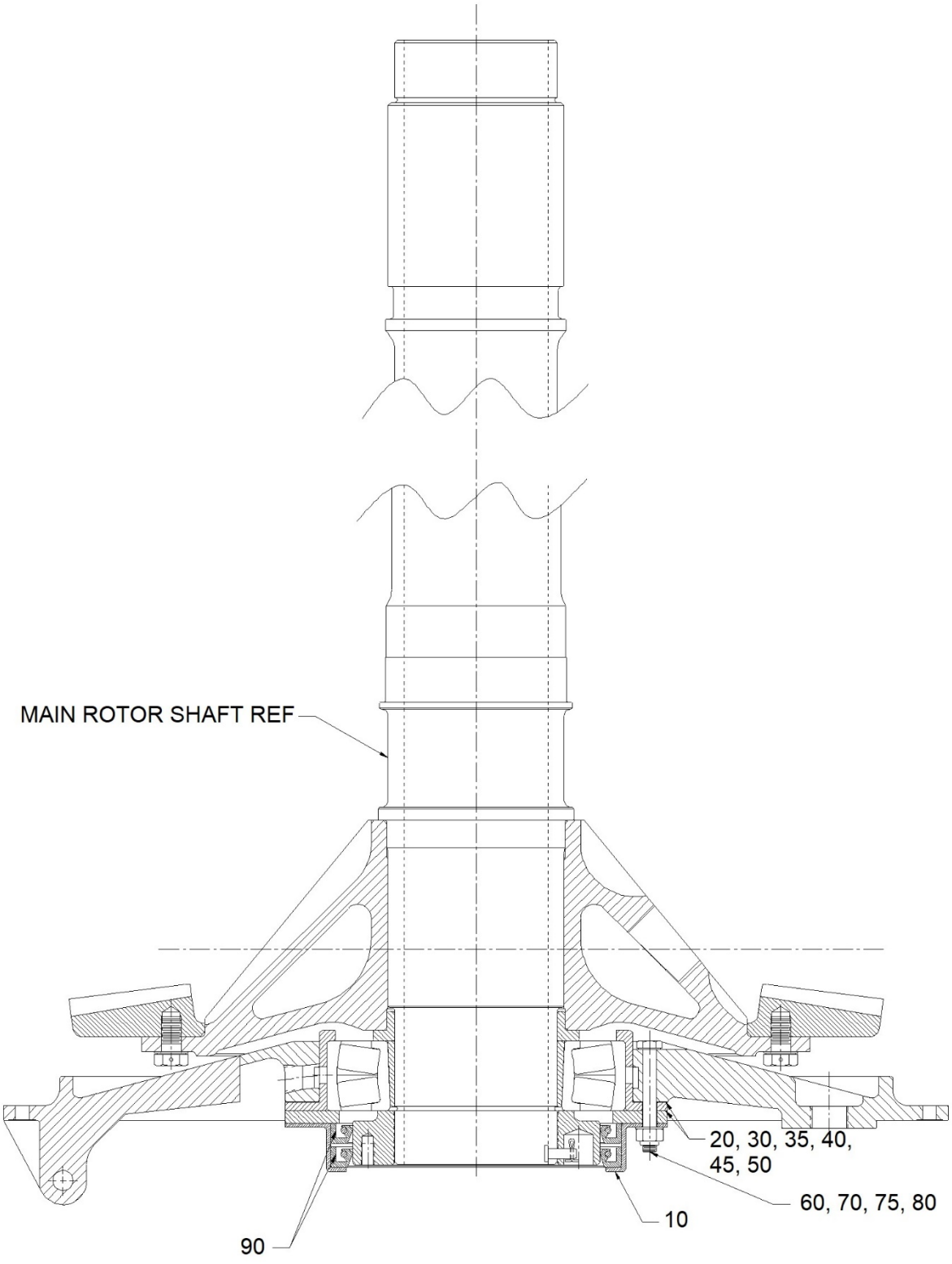

FIGURE 5-7. MAIN ROTOR TRANSMISSION SEAL RETAINER ASSEMBLY

UNCONTROLLED COPY WHEN DOWNLOADED OR PRINTED

Visit www.enstromhelicopter.com for instructions to order an original manual and to register for email notification updates.

FIGURE 5-7. MAIN ROTOR TRANSMISSION SEAL RETAINER ASSEMBLY

ITEM NUMBER	PART NUMBER	DESCRIPTION	QTY PER ASSY	MODELS AFFECTED						
				F-28A	280	F-28C	280C	F-28F	280F	280FX
10	28-13122-1	. Seal Retainer	1	X	X	X	X	X	X	X
–†	28-13122-991	. Seal Retainer with Seals	1	X	X	X	X	X	X	X
20	28-13117-4	. Shim, MRGB 0.002” (Red)	A/R	X	X	X	X	X	X	X
30	28-13117-5	. Shim, MRGB 0.003” (Green)	A/R	X	X	X	X	X	X	X
35	28-13117-8	. Shim, MRGB 0.005” (Blue)	A/R	X	X	X	X	X	X	X
40	28-13117-9	. Shim, MRGB 0.0075” (Matte)	A/R	X	X	X	X	X	X	X
45	28-13117-6	. Shim, MRGB 0.010” (Brown)	A/R	X	X	X	X	X	X	X
50	28-13117-7	. Shim, MRGB 0.020” (Yellow)	A/R	X	X	X	X	X	X	X
60	AN4-17A	. Bolt	1	X	X	X	X	X	X	X
70	NAS1523-4-E	. Stat-O-Seal	8	X	X	X	X	X	X	X
75♦	NAS1149F0432P	. Washer	8	X	X	X	X	X	X	X
80	AN365-428	. Nut	8	X	X	X	X	X	X	X
90	8473H5L16	. Seal (Mast, Lower)	2	X	X	X	X	X	X	X
90	1540	. Seal (Mast, Lower, Alternate)	2	X	X	X	X	X	X	X

♦ Use between nut and stat-o-seal washer.

† Item includes quantity 2 of Item 90 bonded into the retainer.

UNCONTROLLED COPY WHEN DOWNLOADED OR PRINTED

Visit www.enstromhelicopter.com for instructions to order an original manual and to register for email notification updates.

INTENTIONALLY LEFT BLANK

UNCONTROLLED COPY WHEN DOWNLOADED OR PRINTED

Visit www.enstromhelicopter.com for instructions to order an original manual and to register for email notification updates.

SECTION 6

ELECTRICAL SYSTEM

TABLE OF CONTENTS

	Cover Page	6-1
	Table of Contents	6-1
6-1	Electrical Components (F-28A, 280)	6-2
6-2	Electrical Panels	6-5
6-3	12 Volt Battery Over-Current Breaker Installation	6-9
6-4	Landing Light and Anti-Collision Light (F-28A)	6-11
6-5	Night Lighting Kit (280 Models)	6-18
6-6	Strobe And Position Light Installation (C, F Models)	6-22
6-7	Forward Landing Light Installation (F-28C, F-28F)	6-28
6-8	Forward Landing Light Installation (280 Series)	6-31
6-9	Battery Installation (F-28A, 280)	6-33
6-10	12 Volt Battery Installation (C, F, FX Models)	6-35
6-11	Annunciator Systems Installation	6-37
6-12	Fuse Panel (F-28F, 280FX)	6-41
6-13	24 Volt Battery Installation (All Models)	6-43
6-14	Trim Relay Installation 24 Volt (F-28F, 280FX)	6-48

Visit www.enstromhelicopter.com for instructions to order an original manual and to register for email notification updates.

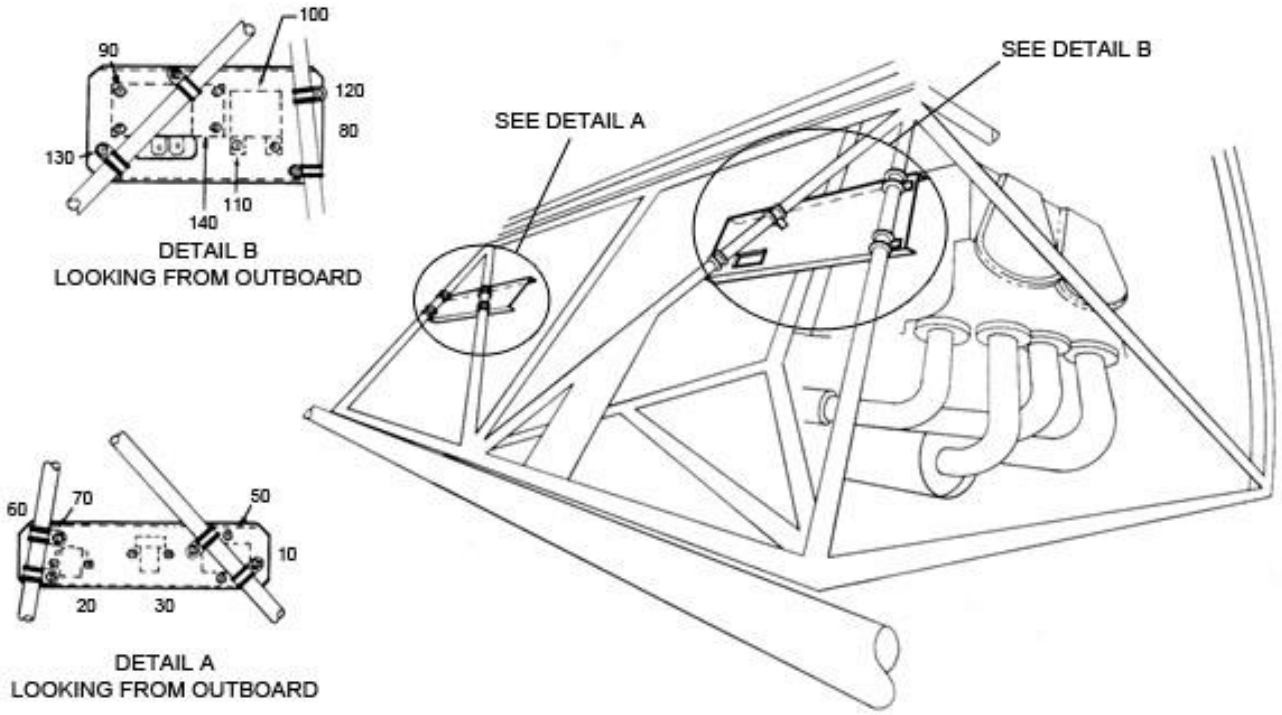

FIGURE 6-1. ELECTRICAL COMPONENTS (F-28A, 280)

UNCONTROLLED COPY WHEN DOWNLOADED OR PRINTED
Visit www.enstromhelicopter.com for instructions to order an original manual and to register for email notification updates.

FIGURE 6-1. ELECTRICAL COMPONENTS (F-28A, 280)

ITEM NUMBER	PART NUMBER	DESCRIPTION	QTY PER ASSY	MODELS AFFECTED						
				F-28A	280	F-28C	280C	F-28F	280F	280FX
10*	28-19004	. Bracket (Inactive)	1	X	X					
20	SAW4204-15-123	. Starter Solenoid 12V	1	X	X					
30	ECD075-11	. Master (Relay 12V)	1	X	X					
30	6041H34	. Master Relay (Superseded by ECD075-11)	1	X	X					
50	MS51861-35	. Screw	6	X	X					
50	AN515-8-8	. Screw (Superseded by MS51861-35)	6	X	X					
–	NAS1149FN816P	. Washer	12	X	X					
–	AN960-8L	. Washer (Superseded by NAS1149FN816P)	12	X	X					
–	MS35338-42	. Washer	6	X	X					
–	AN935-8	. Washer (Superseded by MS35338-42)	6	X	X					
–	MS35649-282	. Nut	6	X	X					
–	AN340-8	. Nut (Superseded by MS35649-282)	6	X	X					
60	MS21919WF12	. Clamp	4	X	X					
70	MS35206-246	. . Screw	4	X	X					
70	AN515-8-10	. . Screw (Superseded by MS35206-246)	4	X	X					
–	NAS1149FN832P	. . Washer (0.032)	8	X	X					
–	AN960-8	. . Washer (Superseded by NAS1149FN832P)	8	X	X					
–	MS35338-42	. . Washer	4	X	X					
–	AN935-8	. . Washer (Superseded by MS35338-42)	4	X	X					
–	MS35649-282	. Nut	4	X	X					
–	AN340-8	. Nut (Superseded by MS35649-282)	4	X	X					
80*	28-19003	. Bracket (Inactive)	1	X	X					
90	ECD069-11	. Alternator Control	1	X	X					

UNCONTROLLED COPY WHEN DOWNLOADED OR PRINTED

Visit www.enstromhelicopter.com for instructions to order an original manual and to register for email notification updates.

FIGURE 6-1. ELECTRICAL COMPONENTS (F-28A, 280)

ITEM NUMBER	PART NUMBER	DESCRIPTION	QTY PER ASSY	MODELS AFFECTED						
				F-28A	280	F-28C	280C	F-28F	280F	280FX
90	VSF-7203	. Voltage Regulator (Superseded by ECD069-11)	1	X	X					
100	10-400608-123	. Starter Vibrator, 12 Volt	1	X	X					
100	10-176485-121	. Starter Vibrator (Superseded by 10-400608-123)	1	X	X					
110	MS51861-35	. Screw	6	X	X					
110	AN515-8-8	. Screw (Superseded by MS51861-35)	6	X	X					
–	NAS1149FN816P	. Washer	6	X	X					
–	AN960-8L	. Washer (Superseded by NAS1149FN816P)	6	X	X					
–	MS35338-42	. . Washer	6	X	X					
–	AN935-8	. . Washer (Superseded by MS35338-42)	6	X	X					
–	MS35649-282	. Nut	4	X	X					
–	AN340-8	. Nut (Superseded by MS35649-282)	4	X	X					
120	MS21919WF12	. Clamp								
130	MS35206-246	. . Screw	4	X	X					
130	AN515-8-10	. . Screw (Superseded by MS35206-246)	4	X	X					
–	NAS1149FN816P	. . Washer	8	X	X					
–	AN960-8L	. . Washer (Superseded by NAS1149FN816P)	8	X	X					
–	MS35338-42	. . Washer	4	X	X					
–	AN935-8	. . Washer (Superseded by MS35338-42)	4	X	X					
–	MS35649-282	. Nut	4	X	X					
–	AN340-8	. Nut (Superseded by MS35649-282)	4	X	X					
140**	X-16799	. . Relay, Over-Voltage	1	X	X					

* May not have been used on early "A" models.

** Used on some early "C" models.

UNCONTROLLED COPY WHEN DOWNLOADED OR PRINTED

Visit www.enstromhelicopter.com for instructions to order an original manual and to register for email notification updates.

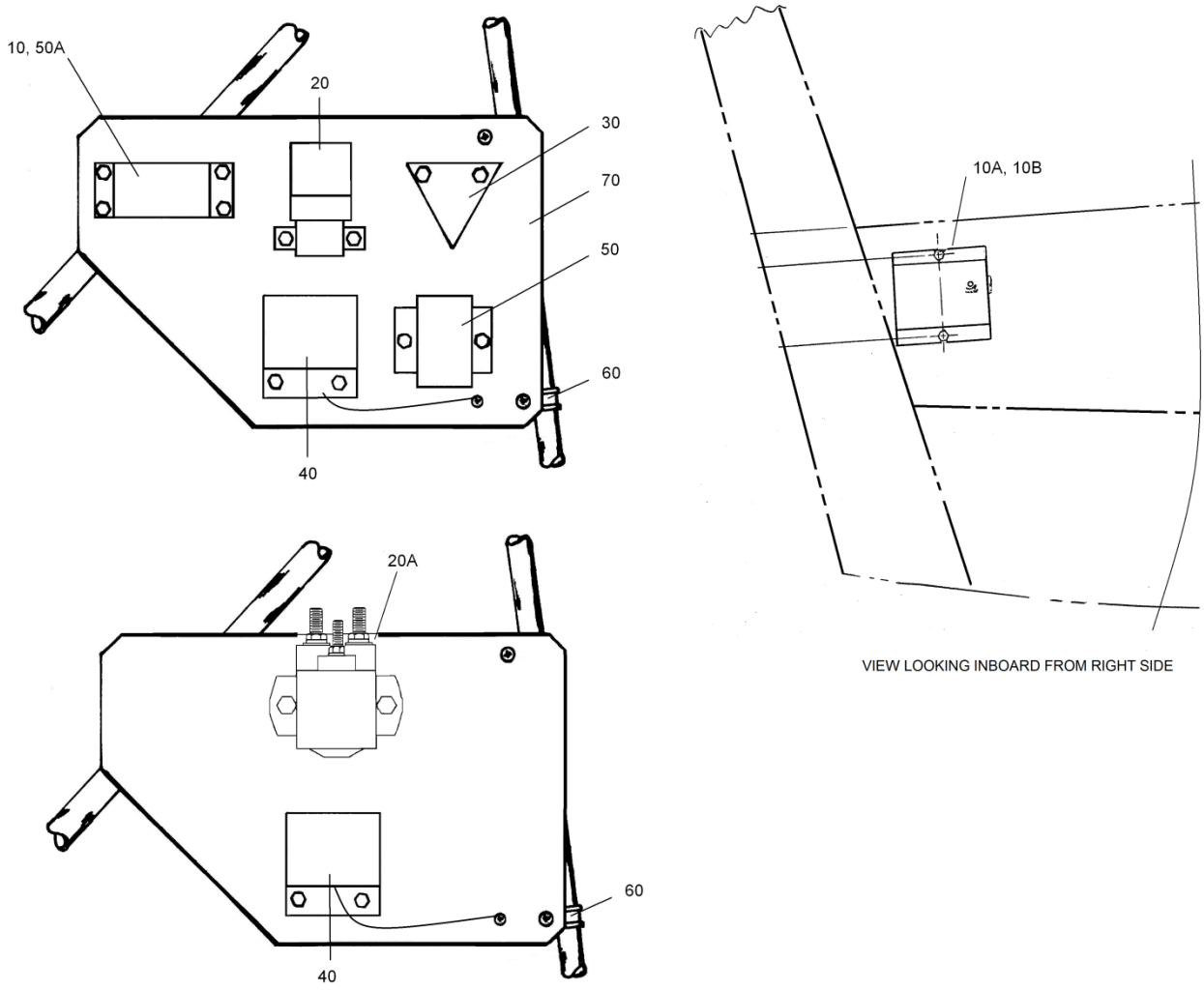

FIGURE 6-2. ELECTRICAL PANELS

UNCONTROLLED COPY WHEN DOWNLOADED OR PRINTED
Visit www.enstromhelicopter.com for instructions to order an original manual and to register for email notification updates.

FIGURE 6-2. ELECTRICAL PANELS

ITEM NUMBER	PART NUMBER	DESCRIPTION	QTY PER ASSY	MODELS AFFECTED						
				F-28A	280	F-28C	280C	F-28F	280F	280FX
10*‡	ECD069-11	. Alternator Control	1			X	X			
10	VSF-7403	. Voltage Regulator (Superseded by ECD069-11)	1			X	X			
–	MS35206-247	. Screw	2			X	X			
–	NAS1149FN816P	. Washer	4			X	X			
–	MS21044N08	. Nut	4			X	X			
–	MS35206-246	. Screw	2			X	X			
10A*†‡	ECD069-11	. Alternator Control (Superseded by ECD069-11)	1			X	X	X	X	
–	MS35207-262	. Screw	2			X	X	X	X	
–	NAS1149F0332P	. Washer	4			X	X	X	X	
–	MS35338-43	. Washer	2			X	X	X	X	
–	AN315-4R	. Nut	2			X	X	X	X	
10BΔ	R1224S-28	. Voltage Regulator	1			X	X	X	X	X
–	MS35207-263	. Screw	2			X	X	X	X	X
–	NAS1149F0316P	. Washer	4			X	X	X	X	X
–	MS21083N3	. Nut	2			X	X	X	X	X
–	ABM1M-A-C	. Mount	A/R			X	X	X	X	X
10B*‡	ECD069-13	. Alternator Control (Alternate)	1			X	X	X	X	X
–	MS35207-263	. Screw	2			X	X	X	X	X
–	NAS1149F0332P	. Washer	4			X	X	X	X	X
–	MS21083N3	. Lock Washer	2			X	X	X	X	X
–	AN315-4R	. Nut	2			X	X	X	X	X
20	ECD075-11	. Master Relay (12V)	1			X	X	X	X	
20	6041-ED22	. Master Relay (Superseded by ECD075-11)	1			X	X	X	X	
–	AN4-3A	. Bolt	2			X	X	X	X	
–	NAS1149F0432P	. Washer	4			X	X	X	X	
–	MS35338-44	. Nut	2			X	X	X	X	
20A	ECD075-13	. Master Relay (24V)	1			X	X	X	X	X
20A	ECD075-11	. Master Relay (12V)	1			X	X	X	X	X

Visit www.enstromhelicopter.com for instructions to order an original manual and to register for email notification updates.

FIGURE 6-2. ELECTRICAL PANELS

ITEM NUMBER	PART NUMBER	DESCRIPTION	QTY PER ASSY	MODELS AFFECTED						
				F-28A	280	F-28C	280C	F-28F	280F	280FX
–	AN4-3A	. Bolt	2			X	X	X	X	X
–	NAS1149F0432P	. Washer	4			X	X	X	X	X
–	MS35338-44	. Lock Washer (0.062")	2			X	X	X	X	X
20A	ECD075-13	. Master Relay (24V)	1			X	X	X	X	X
20A	ECD075-11	. Master Relay (12V)	1			X	X	X	X	X
–	AN4-3A	. Bolt	2			X	X	X	X	X
–	NAS1149F0432P	. Washer	4			X	X	X	X	X
–	MS35338-44	. Lock Washer (0.062")	2			X	X	X	X	X
–	AN315-4R	. Nut	2			X	X	X	X	X
30**	SAZ-4201E	. Relay Starter 12V	1			X	X	X	X	X
30**	SAZ-4401-1	. Relay Starter 24V	1			X	X	X	X	X
30**	SAZ-4401	. Relay Starter 24V (Superseded by SAZ-4401-1)	1			X	X	X	X	X
–	AN4-3A	. Bolt	2			X	X	X	X	X
–	NAS1149F0432P	. Washer	4			X	X	X	X	X
–	MS21044N4	. Nut	2			X	X	X	X	X
–	AN365-428A	. Nut (Superseded by MS21044N4)	2			X	X	X	X	X
40	10-400608-243	. Vibrator, Starter, 24V	1			X	X	X	X	X
40	10-400608-123	. Starter Vibrator, 12V	1			X	X	X	X	X
40	10-382780-12	. Vibrator (Superseded by 10-400608-123 or -243)	1			X	X	X	X	X
–	AN3-3A	. Bolt	2			X	X			
–	NAS1149F0332P	. Washer	4			X	X	X	X	X
–	AN960-10L	. Washer (Superseded by NAS1149F0332P)	4			X	X	X	X	X
–	MS21044N3	. Nut	2			X	X			
–	MS35207-262	. Screw	2			X	X	X	X	X
–	MS35338-43	. Lock Washer (#10)	2			X	X	X	X	X
–	MS35649-202	. Nut	2			X	X	X	X	X
–	MS35206-244	. Screw (GND)	2			X	X	X	X	X

UNCONTROLLED COPY WHEN DOWNLOADED OR PRINTED

Visit www.enstromhelicopter.com for instructions to order an original manual and to register for email notification updates.

FIGURE 6-2. ELECTRICAL PANELS

ITEM NUMBER	PART NUMBER	DESCRIPTION	QTY PER ASSY	MODELS AFFECTED						
				F-28A	280	F-28C	280C	F-28F	280F	280FX
–	NAS1149FN816P	. Washer	1			X	X	X	X	X
–	MS35338-42	. Lock Washer	1			X	X	X	X	X
–	AN340-8	. Nut	1			X	X	X	X	X
50A*‡	ECD069-11	. Alternator Control	1					X	X	
50	X-16799	. Relay, Over-Voltage (Superseded by ECD069-11)	1			X	X			
–	AN3-3A	. Bolt	2			X	X			
–	NAS1149F0332P	. Washer	4			X	X			
–	MS21044N3	. Nut	2			X	X			
50A	B-00264-3	. Overvoltage Control (Superseded by ECD069-11)	1					X	X	
–	MS35206-244	. Screw	2					X	X	
–	NAS1149FN816P	. Washer	4					X	X	
–	MS35338-42	. Washer (#8 Light)	2					X	X	
–	MS35649-282	. Nut	2					X	X	
60	MS21919WCJ12	. Clamp	4			X	X	X	X	X
–	MS35206-246	. Screw	4			X	X	X	X	X
–	NAS1149FN816P	. Washer	8			X	X	X	X	X
–	MS35649-282	. Nut	4			X	X	X	X	X
–	MS35206-246	. Screw	4			X	X	X	X	X
–	NAS1149FN816P	. Washer	8			X	X	X	X	X
–	MS35338-42	. Lock Washer	4			X	X	X	X	X
–	MS35649-282	. Nut	4			X	X	X	X	
70	28-19016-11	. Plate	1			X	X	X	X	X

* The ECD069-11 combines the voltage regulator and the overvoltage relay.

** Located in the battery compartment.

† Item 10A may have been used on some early "C" models.

‡ Available as a remanufactured part. Add a “-R” to the end of the part number when ordering.

Δ Effectivity F-28F S/N 833 – subsequent and 280FX S/N 2167 – subsequent. Eligible for F-28F S/N 509 – subsequent and 280FX S/N 2001 – subsequent; F-28C/280C S/N all.

UNCONTROLLED COPY WHEN DOWNLOADED OR PRINTED

Visit www.enstromhelicopter.com for instructions to order an original manual and to register for email notification updates.

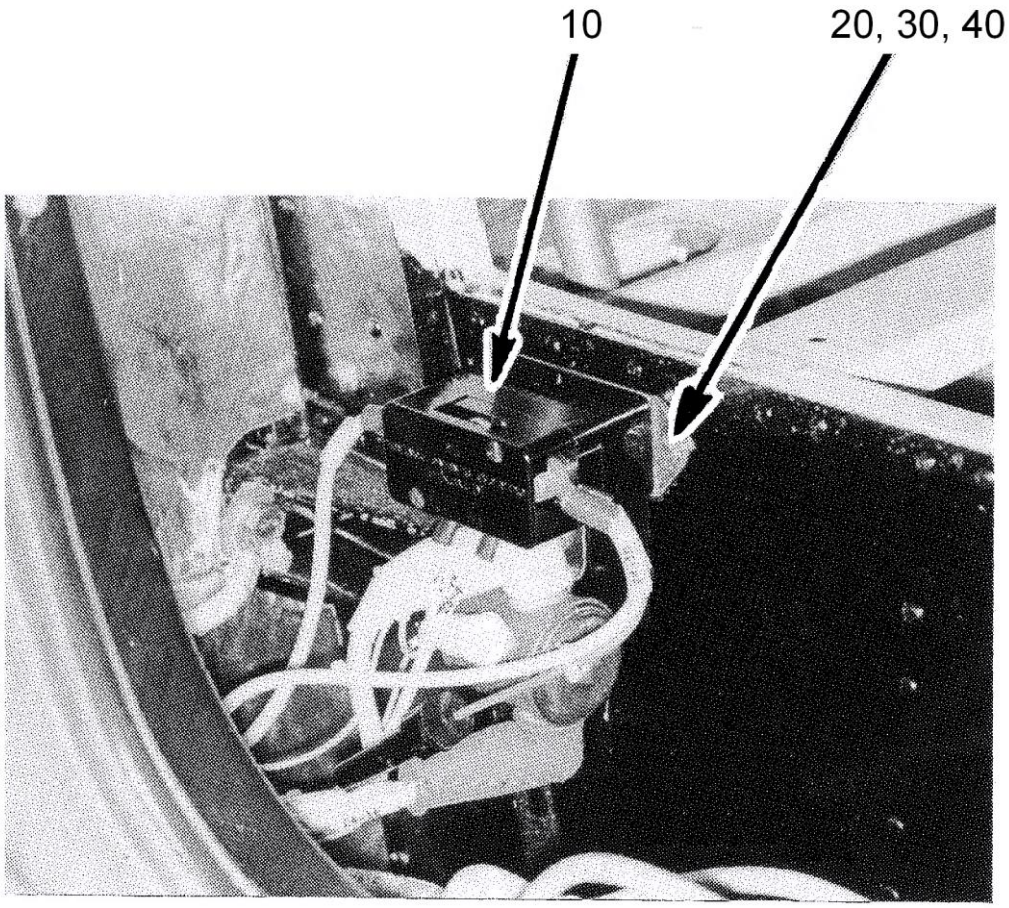

FIGURE 6-3. 12 VOLT BATTERY OVER-CURRENT BREAKER INSTALLATION

UNCONTROLLED COPY WHEN DOWNLOADED OR PRINTED

Visit www.enstromhelicopter.com for instructions to order an original manual and to register for email notification updates.

FIGURE 6-3. 12 VOLT BATTERY OVER-CURRENT BREAKER INSTALLATION

ITEM NUMBER	PART NUMBER	DESCRIPTION	QTY PER ASSY	MODELS AFFECTED						
				F-28A	280	F-28C	280C	F-28F	280F	280FX
10*	7235-1-100	. Breaker, Circuit, 100 A Thermal	1			X	X	X	X	X
20*	AN3-3A	. Bolt	2			X	X	X	X	X
30*	NAS1149F0332P	. Washer	4			X	X	X	X	X
30*	AN960-10L	. Washer (Superseded by NAS1149F0332P)	4			X	X	X	X	X
40*	MS21083N3	. Nut	2			X	X	X	X	X
40*	AN364-1032A	. Nut (Superseded by MS21083N3)	2			X	X	X	X	X
–**	MS26574-5	. Breaker, Circuit, 5 Amp Push/Pull	1			X	X	X	X	X
–**	1500-052-2	. Breaker, Circuit, 2 Amp Push/Pull (Superseded By MS26574-5)	1			X	X	X	X	X
–**	3MC1-3-2	. Breaker, Circuit, 2 Amp Magnetic (Superseded By 1500-052-2)	1			X	X	X	X	X
–**	28-18081-11	. Placard (Bus Fault Breaker)	1			X	X	X	X	X

* Located in the battery compartment

** Located on the instrument panel above the E.G.T.

UNCONTROLLED COPY WHEN DOWNLOADED OR PRINTED

Visit www.enstromhelicopter.com for instructions to order an original manual and to register for email notification updates.

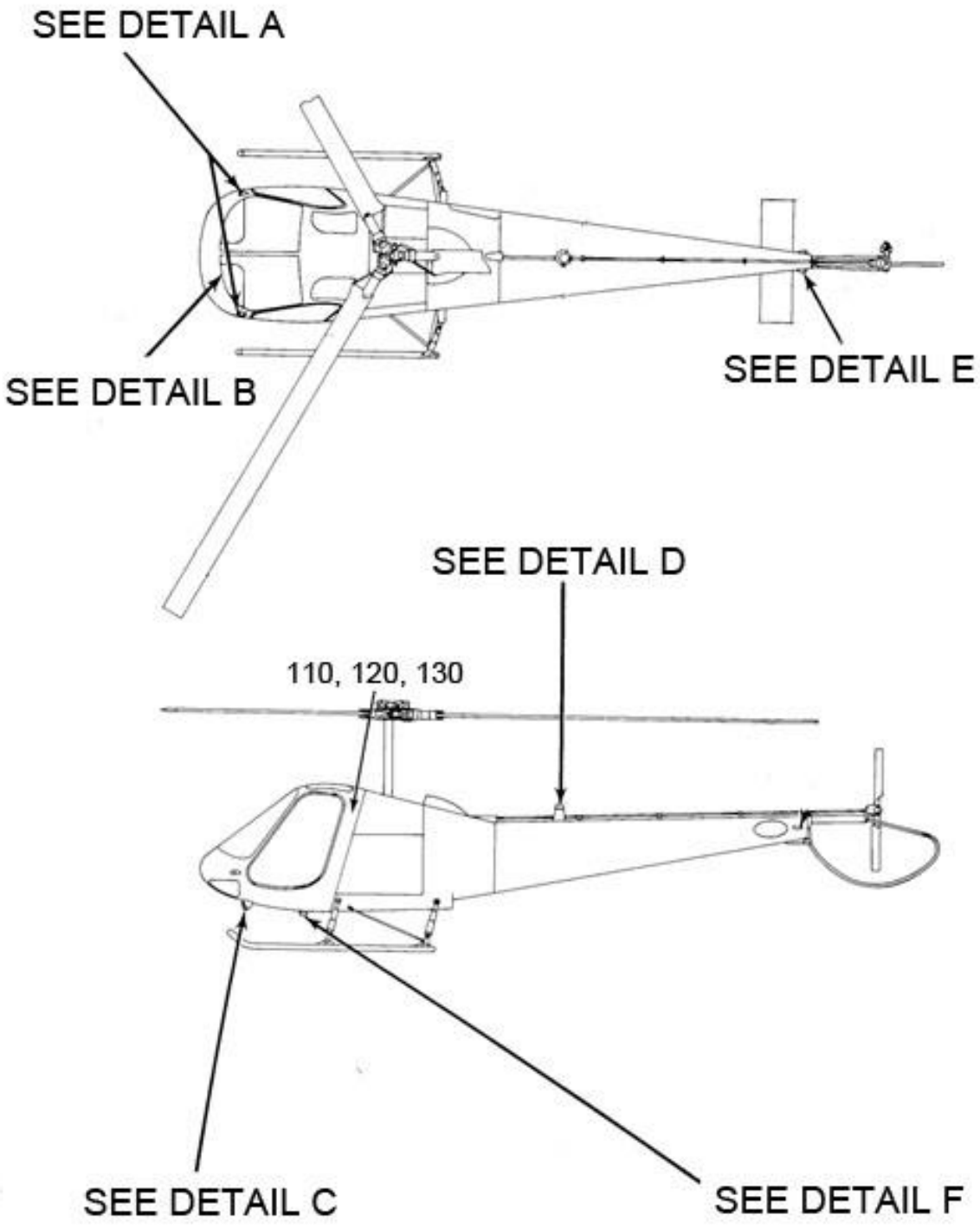

Sheet 1 of 2

FIGURE 6-4. LANDING LIGHT AND ANTI-COLLISION LIGHT (F-28A)

UNCONTROLLED COPY WHEN DOWNLOADED OR PRINTED

Visit www.enstromhelicopter.com for instructions to order an original manual and to register for email notification updates.

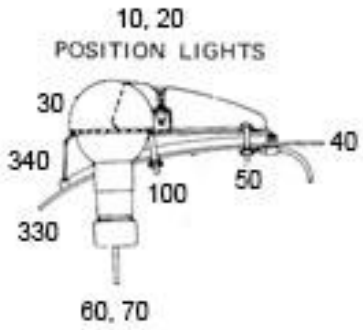

DETAIL A

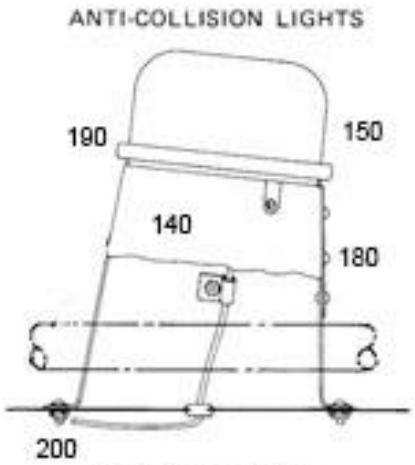

DETAIL D

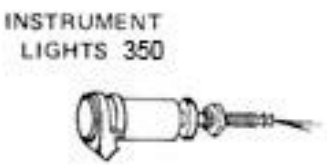

DETAIL B

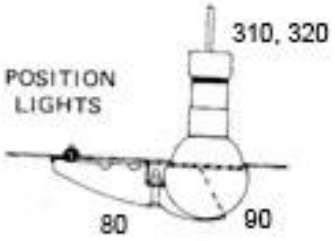

DETAIL E

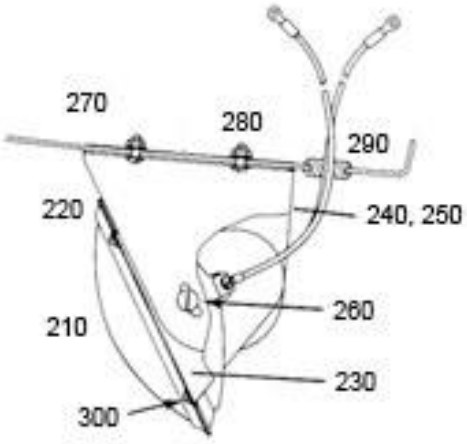

DETAIL C

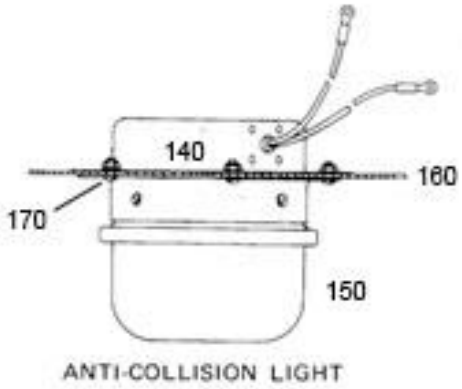

DETAIL F

Sheet 2 of 2

FIGURE 6-4. LANDING LIGHT AND ANTI-COLLISION LIGHT (F-28A)

UNCONTROLLED COPY WHEN DOWNLOADED OR PRINTED

Visit www.enstromhelicopter.com for instructions to order an original manual and to register for email notification updates.

FIGURE 6-4. LANDING LIGHT AND ANTI-COLLISION LIGHT (F-28A)

ITEM NUMBER	PART NUMBER	DESCRIPTION	QTY PER ASSY	MODELS AFFECTED						
				F-28A	280	F-28C	280C	F-28F	280F	280FX
–*	28-21000-1	Night Lighting Kit	REF	X						
10●	01-0770001-51	. Position Light Assembly, Red, 14V	1	X						
10	A1285-R-12	. Left (Red) Forward (Superseded by 01-0770001-51)	1	X						
–●	34-0070373-01	. . Bulb (Use with A1285-R-12 Position Light).	1	X						
–●	68-4230020-50	. . Lens, Red Position Light	1	X						
–●	19-150002-009	. . Lens Retainer	1	X						
–●	34-0414020-65	. . Reflector Lamp, 14V	1	X						
–●	38-0230021-00	. . Gasket, Position Light Lens	1	X						
–●	02-0350003-01	. . Position Light Base Assembly	1	X						
20●	01-0770001-41	. Position Light Assembly, Green, 14V	1	X						
20	A1285-G-12	. Right (Green) Forward (Superseded by 01-0770001-41)	1	X						
–●	34-0070373-01	. . Bulb (Use with A1285-G-12 Position Light)	1	X						
–●	68-4230020-40	. . Lens, Green Position Light	1	X						
–●	19-150002-009	. . Lens Retainer	1	X						
–●	34-0414020-65	. . Reflector Lamp, 14V	1	X						
–●	38-0230021-00	. . Gasket, Position Light Lens	1	X						
–●	02-0350003-01	. . Position Light Base Assembly	1	X						
40	28-21003-1	. Backing Plate	2	X						
50	AN507-632R8	. . Screw	6	X						
–	NAS1149FN616P	. . Washer	6	X						
–	AN960-6L	. . Washer (Superseded by NAS1149FN616P)	6	X						
–	MS21083N06	. . Nut	6	X						
–	AN364-632A	. . Nut (Superseded by MS21083N06)	6	X						
60	28-19001-948	Wire, Left	1	X						

UNCONTROLLED COPY WHEN DOWNLOADED OR PRINTED

Visit www.enstromhelicopter.com for instructions to order an original manual and to register for email notification updates.

FIGURE 6-4. LANDING LIGHT AND ANTI-COLLISION LIGHT (F-28A)

ITEM NUMBER	PART NUMBER	DESCRIPTION	QTY PER ASSY	MODELS AFFECTED						
				F-28A	280	F-28C	280C	F-28F	280F	280FX
70	28-19001-943	Wire, Right	1	X						
80●	NPN	. Position Light Assembly, Clear, 14V (See Note1)	2	X						
80●	A1285-C-12	. Light Assy. Rear (Clear)	2	X						
–●	34-0070373-01	. . Bulb (Use with A1285-C-12 Position Light)	1	X						
–●	68-4230020-30	. . Lens, Clear	1	X						
–●	19-150002-009	. . Lens Retainer	1	X						
–●	34-0414020-65	. . Reflector Lamp, 14V	1	X						
–●	38-0230021-00	. . Gasket, Position Light Lens	1	X						
–●	02-0350003-01	. . Position Light Base Assembly	1	X						
90●	34-0070373-01	. Reflector Lamp 12V	2	X						
90	1512-140	. Bulb (Superseded by 34-0070373-01)	2	X						
100	AN507-632R12	. Screw	6	X						
–	MS21083N06	. Nut	6	X						
–	AN364-632A	. Nut (Superseded by MS21083N06)	6	X						
–	NAS1149FN616P	. Washer	6	X						
–	AN960-6L	. Washer (Superseded by NAS1149FN616P)	6	X						
110	D6810A-12	Map Light (Grimes)	3	X						
120	1816	. Lamp	3	X						
130	AN526-632R7	. Screw	6	X						
–	MS21083N06	. Nut	6	X						
–	AN364-632A	. Nut (Superseded by MS21083N06)	6	X						
–	NAS1149FN616P	. Washer	6	X						
–	AN960-6L	. Washer (Superseded by NAS1149FN616P)	6	X						
140●	01-0770029	Anti-Collision Light	2	X						
140	D-7080A-12	. Anti-Collision Light (Superseded by 01-0770029)	2	X						

UNCONTROLLED COPY WHEN DOWNLOADED OR PRINTED
Visit www.enstromhelicopter.com for instructions to order an original manual and to register for email notification updates.

FIGURE 6-4. LANDING LIGHT AND ANTI-COLLISION LIGHT (F-28A)

ITEM NUMBER	PART NUMBER	DESCRIPTION	QTY PER ASSY	MODELS AFFECTED						
				F-28A	280	F-28C	280C	F-28F	280F	280FX
150●	34-0070371-02	. . Reflector Lamp, 14V, 40W	4	X						
150	7079B-12	. . Bulb (Superseded by 34-0070371-02)	4	X						
160	28-21012-1	. Backing Plate, Lower (Obsolete)	1	X						
170	AN526-632R8	. . Screw	5	X						
–	NAS1149FN616P	. . Washer	5	X						
–	AN960-6L	. . Washer (Superseded by NAS1149FN616P)	5	X						
–	MS21083N06	. . Nut	5	X						
–	AN364-632A	. . Nut (Superseded by MS21083N06)	5	X						
180	28-21011-1	. Light Mount, Upper	1	X						
190	1/8-6NA	. . Clamp	1	X						
200	AN526-832R6	. . Screw	7	X						
–	NAS1149FN816P	. . Washer	7	X						
–	AN960-8L	. . Washer (Superseded by NAS1149FN816P)	7	X						
–	MS35489-1	. . Grommet	1	X						
210	4509	. Landing Light Bulb (100W)	1	X						
210	GE4313 (250W)	. Landing Light Bulb (Superseded by 4509)	1	X						
220	28-21009-1	. Lens Clamp	1	X						
230	28-21008-1	. Lens Holder	1	X						
240	28-21007-1	. Bracket (Obsolete)	1	X						
250	28-21006-1	. Mounting Bracket (RH)	1	X						
260	AN515-6-6	. Screw	4	X						
270	28-21014-1	. Backing Plate	1	X						
280	AN526-632R8	. Screw	4	X						
–	NAS1149FN616P	. Washer	4	X						
–	AN960-6L	. Washer (Superseded by NAS1149FN616P)	4	X						

UNCONTROLLED COPY WHEN DOWNLOADED OR PRINTED
Visit www.enstromhelicopter.com for instructions to order an original manual and to register for email notification updates.

FIGURE 6-4. LANDING LIGHT AND ANTI-COLLISION LIGHT (F-28A)

ITEM NUMBER	PART NUMBER	DESCRIPTION	QTY PER ASSY	MODELS AFFECTED						
				F-28A	280	F-28C	280C	F-28F	280F	280FX
–	MS21083N06	. Nut	4	X						
–	AN364-632A	. Nut (Superseded by MS21083N06)	4	X						
290	MS35489-5	. Grommet	1	X						
290	AN931-3-10	. Grommet (Superseded by MS35489-5)	1	X						
300	MS35206-228	. Screw	4	X						
300	AN515-6-6	. Screw (Superseded by MS35206-228)	4	X						
–	NAS1149FN616P	. Washer	8	X						
–	AN960-6L	. Washer (Superseded by NAS1149FN616P)	8	X						
–	MS21083N06	. Nut	4	X						
–	AN364-632A	. Nut (Superseded by MS21083N06)	4	X						
310	32-5R	Wire	1	X						
320	32-7L	Wire	1	X						
330	28-21003-1	. Backing Plate	2	X						
340	28-21002-3	. Mount Pad (LH)	1	X						
340	28-21002-4	. Mount Pad (RH)	1	X						
340	28-21002	. Mount Pad (Superseded by 28-21002-3 and -4)	2	X						
350●	01-0770119-09	. Post Light	9	X						
350	A-8970B-1-330	. Instrument Light (Superseded by 01-0770119-09)	9	X						
–●	02-0350281-0	. Post Light HD Assembly (Instrument White)	1	X						
–●	02-03705534-00	. Base Assembly 1”	1	X						
–●	20-0824130A00	. Spacer	1	X						
–	330	. Lamp, Miniature, 14V	1	X						

UNCONTROLLED COPY WHEN DOWNLOADED OR PRINTED
Visit www.enstromhelicopter.com for instructions to order an original manual and to register for email notification updates.

* Used on early "C" models.

Note 1 To order a new light for the tail. Order a red (01-0770001-51) or green (01-0770001-41) position light and a clear lens (68-4230020-30).

- Order these parts from Whelen Engineering at www.whelen.com.

UNCONTROLLED COPY WHEN DOWNLOADED OR PRINTED
Visit www.enstromhelicopter.com for instructions to order an original manual and to register for email notification updates.

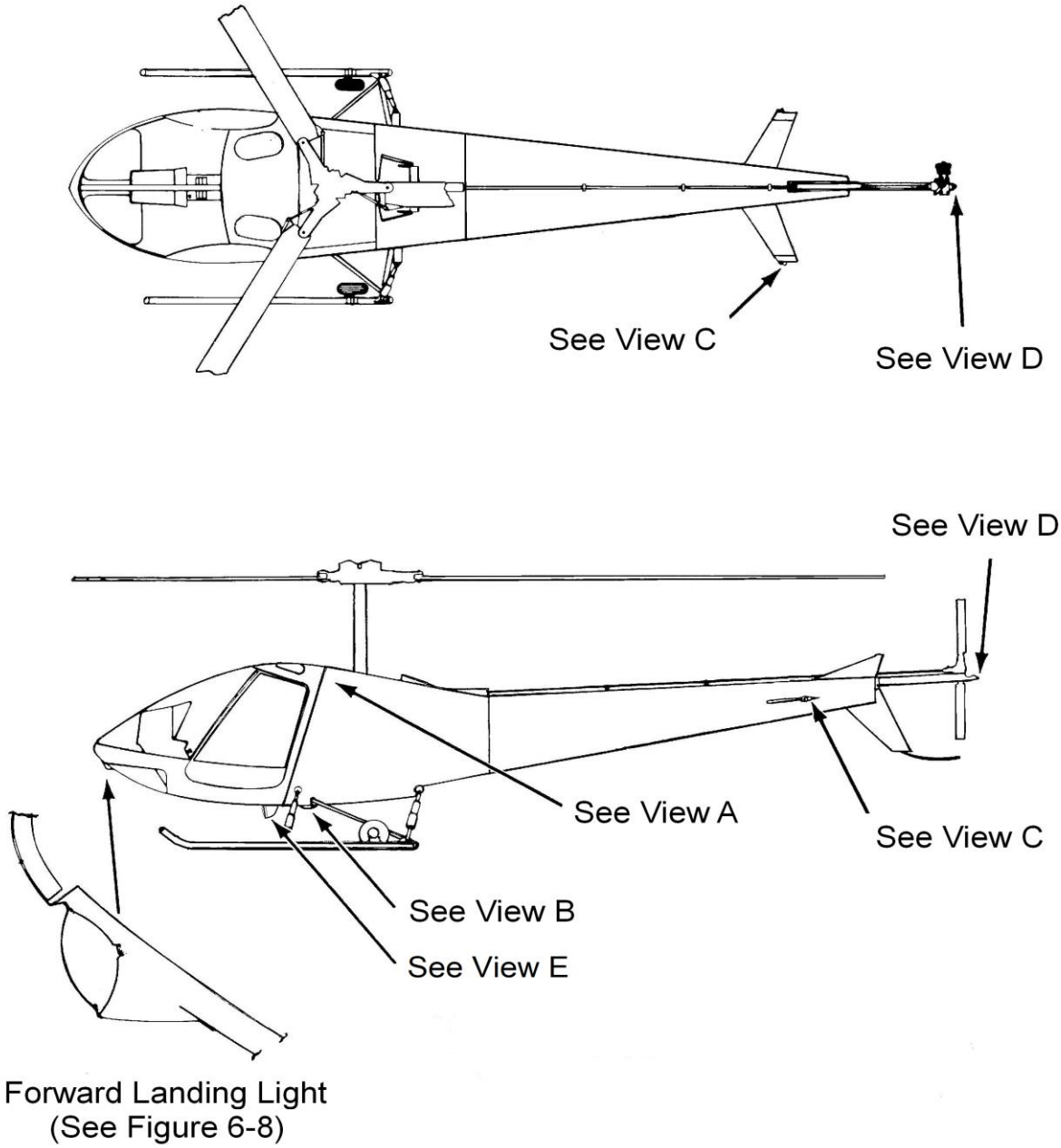

Sheet 1 of 2

FIGURE 6-5. NIGHT LIGHTING KIT (280 MODELS)

UNCONTROLLED COPY WHEN DOWNLOADED OR PRINTED
Visit www.enstromhelicopter.com for instructions to order an original manual and to register for email notification updates.

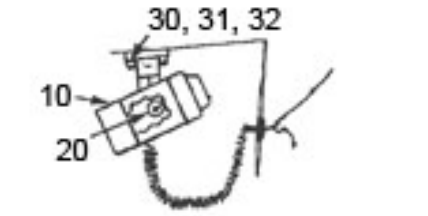

COCKPIT UTILITY LIGHT

VIEW A

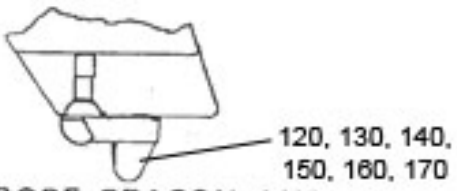

STROBE BEACON AND NAVIGATION LIGHT

VIEW C

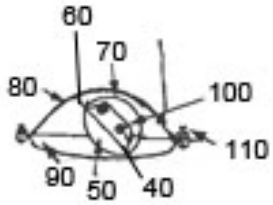

HOVERING FLOODLIGHT

VIEW B



NAVIGATION LIGHT

VIEW D

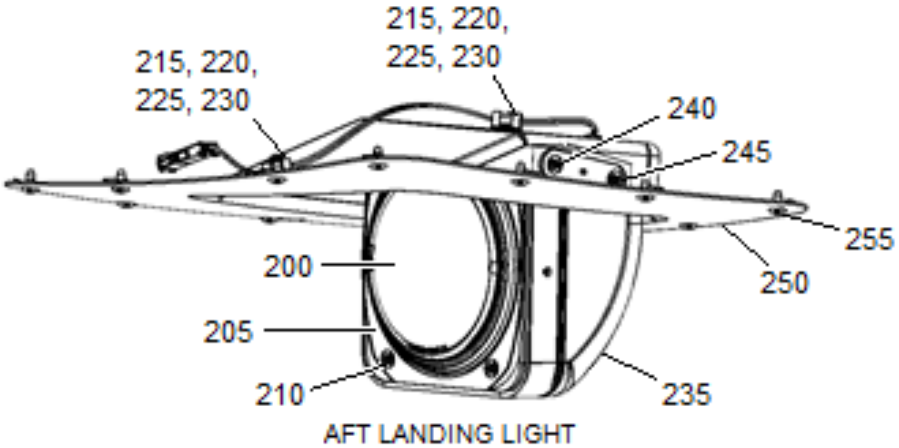

AFT LANDING LIGHT

VIEW E

Sheet 2 of 2

FIGURE 6-5. NIGHT LIGHTING KIT (280 MODELS)

UNCONTROLLED COPY WHEN DOWNLOADED OR PRINTED

Visit www.enstromhelicopter.com for instructions to order an original manual and to register for email notification updates.

FIGURE 6-5. NIGHT LIGHTING KIT (280 MODELS)

ITEM NUMBER	PART NUMBER	DESCRIPTION	QTY PER ASSY	MODELS AFFECTED						
				F-28A	280	F-28C	280C	F-28F	280F	280FX
10	15-0007-5	Map Light (Grimes)	1		X		X		X	
10	2000653-001	Utility Light (24 V)	1					X		X
20	1816	. Lamp: 12 V	1		X		X		X	
20	CM1816	. Bulb (Superseded by 1816)	1		X		X		X	
20	313	. Lamp: 24 V	1					X		X
30	AN525-8R20	. Screw	2		X		X		X	X
31	NAS1149FN816P	. Washer	2		X		X		X	X
31	AN960-8L	. Washer (Superseded by NAS1149FN816P)	2		X		X		X	X
32	MS21083N08	. Nut	2		X		X		X	X
32	AN364-832	. Nut (Superseded by MS21083N08)	2		X		X		X	X
40	AN526-832R8	. Screw	4		X		X		X	X
50	4591	. Lamp (24V)	1					X		X
50	4406	. Lamp (12V)	1		X		X		X	
60	28-21009-1	. Lens Clamp	2		X		X		X	X
70	28-17313-1	. Lens Holder	1		X		X		X	X
80	28-17314-1	. Bracket Assembly	1		X		X		X	X
90	28-17316-1	. Shield	1		X		X		X	X
100	MS27039-0807	. Screw	4		X		X		X	X
–	NAS1149FN816P	. Washer	4		X		X		X	X
-–	AN960-8L	. Washer (Superseded by NAS1149FN816P)	4		X		X		X	X
110	MS27039-0808	. Screw	12		X		X		X	X
–	NAS1149FN816P	. Washer	4		X		X		X	X
–	AN960-8L	. Washer (Superseded by NAS1149FN816P)	4		X		X		X	X
–	28-21048-1	. Position & Strobe Light Assy (Red)	1		X		X			
120	01-0770054-02	. . Light, Position, Red (14V)	1		X		X			
–	28-21048-3	. Position & Strobe Light Assy (Green)	1		X		X			

UNCONTROLLED COPY WHEN DOWNLOADED OR PRINTED
Visit www.enstromhelicopter.com for instructions to order an original manual and to register for email notification updates.

FIGURE 6-5. NIGHT LIGHTING KIT (280 MODELS)

ITEM NUMBER	PART NUMBER	DESCRIPTION	QTY PER ASSY	MODELS AFFECTED						
				F-28A	280	F-28C	280C	F-28F	280F	280FX
130	01-0770054-00	. . Light, Position, Green (14V)	1		X		X			
–	28-21048-5	. Position & Strobe Light Assy (Red)	1					X	X	X
140	01-0790006-02	. . Light, Position, Red (14V)	1					X	X	X
–	28-21048-6	. Position & Strobe Light Assy (Green)	1					X	X	X
150	01-0790006-00	. . Light, Position Green (14V)	1					X	X	X
–*	28-21048-9	. Position & Strobe Light Assy (Red)	1					X	X	X
–	28-21048-7	. Position & Strobe Light Assy (Red) (Inactive)	1					X	X	X
–	AN526-632R16	. Screw	3					X	X	X
160*	01-0790340-04	. . Light, Position, Red (24V)	1					X	X	X
160	01-0790006-03	. . Light, Position, Red (24V) (Inactive)	1					X	X	X
–*	28-21048-101	. Position & Strobe Light Assy (Green)	1					X	X	X
–	28-21048-8	. Position & Strobe Light Assy (Green) (Inactive)	1					X	X	X
–	AN526-632R16	. Screw	3					X	X	X
170*	01-0790340-03	. . Light, Position, Green (24V)	1					X	X	X
170	01-0790006-01	. . Light, Position, Green (24V) (Inactive)	1					X	X	X
180	01-0770034-02	. Tail Position Light (A555)	1		X		X		X	
190	AN515-6-R11	. Screw	2		X		X		X	
–**	280-210004-5	Aft Landing Light Installation	1							X
200	28-19132-3	. Aft LED Landing Light Assembly	1							X
205	28-21009-1	. Lens Clamp	1							X
210	AN526-832R8	. Screw	4							X
215	MS21919WDG2	. Clamp	2							X
220	AN525-832R6	. Screw	2							X
225	NAS1149FN816P	. Washer	2							X

UNCONTROLLED COPY WHEN DOWNLOADED OR PRINTED

Visit www.enstromhelicopter.com for instructions to order an original manual and to register for email notification updates.

FIGURE 6-5. NIGHT LIGHTING KIT (280 MODELS)

ITEM NUMBER	PART NUMBER	DESCRIPTION	QTY PER ASSY	MODELS AFFECTED						
				F-28A	280	F-28C	280C	F-28F	280F	280FX
230	MS21083N08	. Nut	2							X
235	28-21010-3	. Aft Landing Light Housing Assembly	1							X
240	AN526-832R10	. Screw	2							X
245	AN526-832R9	. Screw	2							X
250†	28-113054-1	. Closeout Assembly	REF							X
255†	8X3/8	. Screw	REF							X

* Effectivity F-28F S/N 833 – subsequent and 280FX S/N 2148 – subsequent.
Eligibility F-28F S/N 509 – subsequent and 280FX S/N 2001 – subsequent.

** Effectivity 280FX S/N 2168 and subsequent.

† Next assembly P/N 28-113055 (Ref. Figure 7-4D.).

UNCONTROLLED COPY WHEN DOWNLOADED OR PRINTED

Visit www.enstromhelicopter.com for instructions to order an original manual and to register for email notification updates.

INTENTIONALLY LEFT BLANK

UNCONTROLLED COPY WHEN DOWNLOADED OR PRINTED
Visit www.enstromhelicopter.com for instructions to order an original manual and to register for email notification updates.

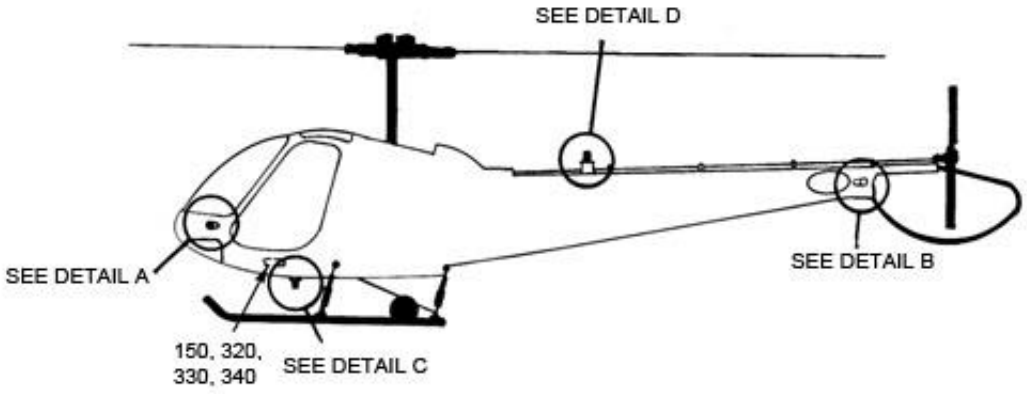

F28F S/N 742 AND PREVIOUS

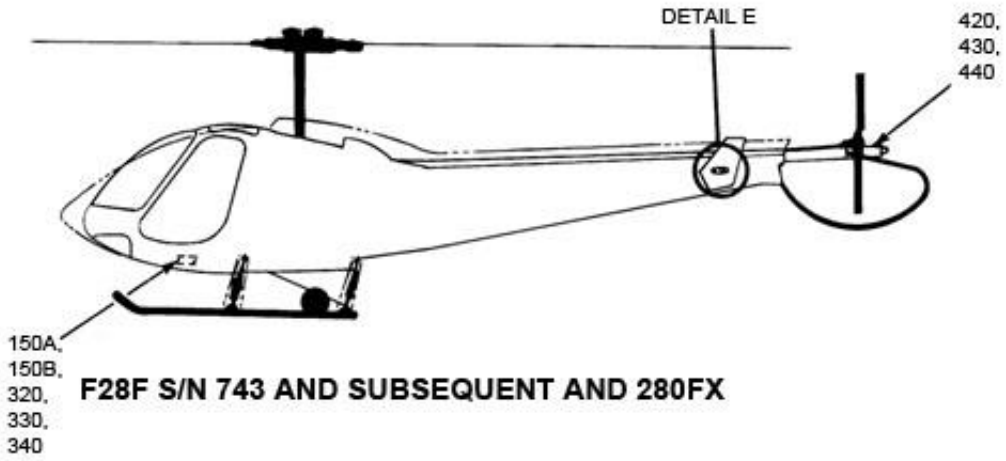

F28F S/N 743 AND SUBSEQUENT AND 280FX

Sheet 1 of 2

FIGURE 6-6. STROBE AND POSITION LIGHT INSTALLATION (C, F MODELS)

UNCONTROLLED COPY WHEN DOWNLOADED OR PRINTED

Visit www.enstromhelicopter.com for instructions to order an original manual and to register for email notification updates.

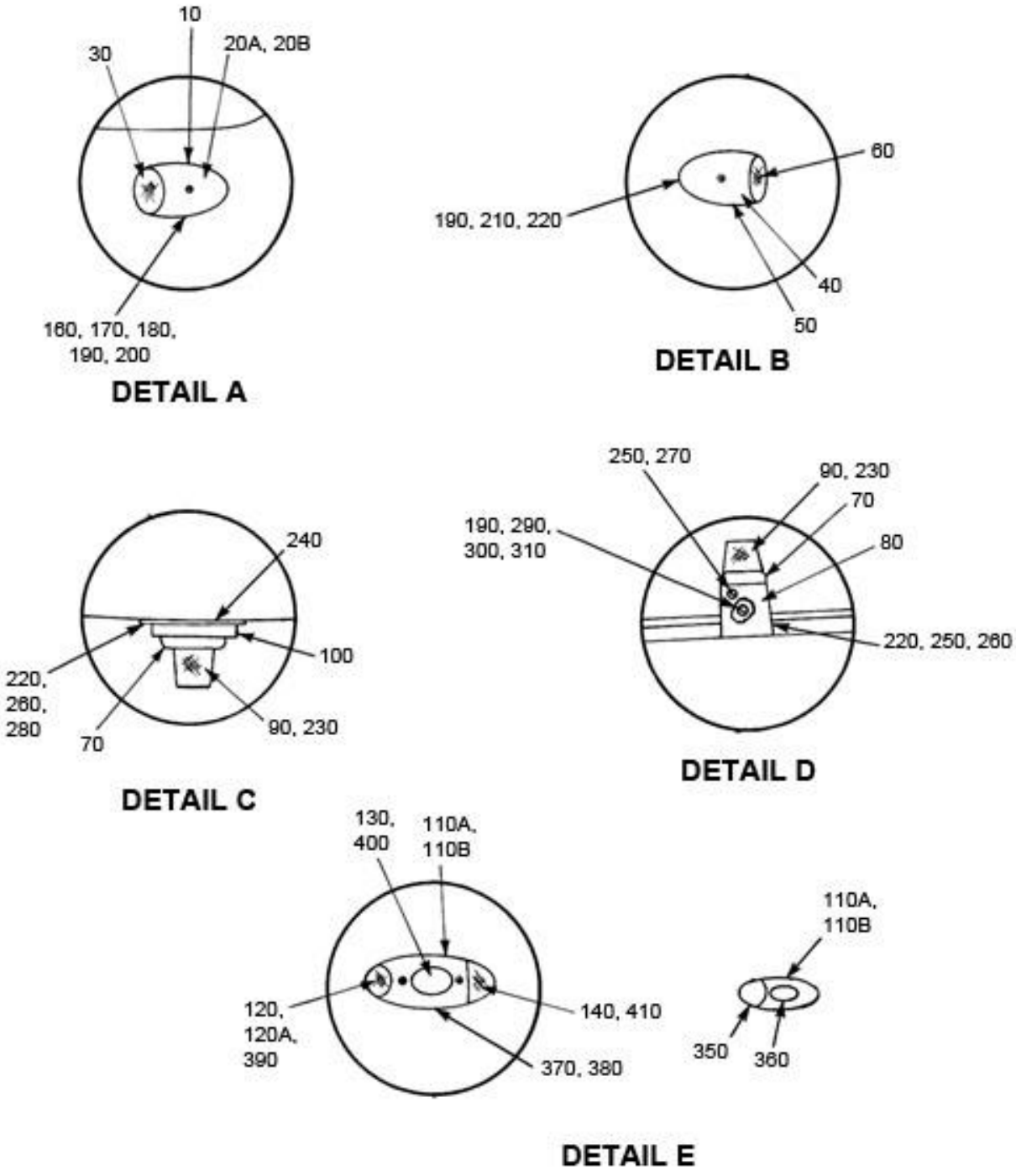

Sheet 2 of 2

FIGURE 6-6. STROBE AND POSITION LIGHT INSTALLATION (C, F MODELS)

UNCONTROLLED COPY WHEN DOWNLOADED OR PRINTED

Visit www.enstromhelicopter.com for instructions to order an original manual and to register for email notification updates.

FIGURE 6-6. STROBE AND POSITION LIGHT INSTALLATION (C, F MODELS)

ITEM NUMBER	PART NUMBER	DESCRIPTION	QTY PER ASSY	MODELS AFFECTED						
				F-28A	280	F-28C	280C	F-28F	280F	280FX
10	28-21002-3	. Mount Pad (LH)	1			X		X		
10	28-21002-4	. Mount Pad (RH)	1			X		X		
20A	A-1285-R-12	. Light Assembly L.H.	1			X		X		
20B	A-1285-G-12	. Light Assembly R.H.	1			X		X		
30	68-4230020-50	. Lens-Red	1			X		X		
30	A-1280-2	. Lens-Red (Superseded by 68-4230020-50)	1			X		X		
30	68-4230020-40	. Lens-Green	1			X		X		
30	A-1280-3	. Lens-Green (Superseded by 68-4230020-40)	1			X		X		
40	28-21004-1	. Light Shroud (Obsolete)	2			X		X		
50	30-0009-36	. Light Assembly Wing	2			X		X		
60	A-1280-1	. Lens-Clear	2			X		X		
70	H-103	. Adapter	2			X		X		
80	28-21011-1	. Aircraft Light Mount	1			X		X		
90	01-0770029-R	. Strobe Light - Red	2							
90	HR, DF-14R	. Strobe Light – Red (Superseded by 01-0770029-R)	2							
100	19-130074-009	. Adapter Plate	1			X		X		
100	A-440	. Adapter Plate (Superseded by 19-130074-009)	1			X		X		
110A	28-21048-1	. Position & Strobe Light Assy (LH)	1		X		X		X	
110B	28-21048-3	. Position & Strobe Light Assy (RH)	1		X		X		X	
110A	28-21048-5	. Position & Strobe Light Assy (LH)	1					X		X
110B	28-21048-6	. Position & Strobe Light Assy (RH)	1					X		X
110A	28-21048-7	. Position & Strobe Light Assy (LH) (24V) (Inactive)	1					X		X
110B	28-21048-8	. Position & Strobe Light Assy (RH) (24V) (Inactive)	1					X		X
110C*	28-21048-9	. Position & Strobe Light Assy (Red)	1					X	X	X

UNCONTROLLED COPY WHEN DOWNLOADED OR PRINTED

Visit www.enstromhelicopter.com for instructions to order an original manual and to register for email notification updates.

FIGURE 6-6. STROBE AND POSITION LIGHT INSTALLATION (C, F MODELS)

ITEM NUMBER	PART NUMBER	DESCRIPTION	QTY PER ASSY	MODELS AFFECTED						
				F-28A	280	F-28C	280C	F-28F	280F	280FX
110D*	28-21048-101	. Position & Strobe Light Assy (Green)	1					X	X	X
120	68-4230020-50	. Lens-Red	1		X		X	X	X	X
120	W-1284-R	. Lens-Red (Superseded by 68-4230020-50)	1		X		X	X	X	X
120A	68-4230020-40	. Lens-Green	1		X		X	X	X	X
120A	W-1284-G	. Lens-Green (Superseded by 68-4230020-40)	1		X		X	X	X	X
130	02-0250276-00	. Flash Tube	2		X		X	X	X	X
130	A610	. Flash Tube (Superseded by 02-0250276-00)	2		X		X	X	X	X
140	34-0412070-63	. Lamp, Light 12 V	1		X		X	X	X	
140	A508-14	. Lamp, Light 12 V Tail (Superseded by 34-0412070-63)	1		X		X	X	X	
140	34-0428070-64	. Lamp, Light 28 V	1		X		X	X	X	
140	A508-28	. Lamp, Light 28 V (Superseded by 34-0428070-64)	1		X		X	X	X	
150	01-0770028-05	. Power Supply – Strobe	1			X		X		
150	A413A,HDA,DF	. Power Supply – Strobe (Superseded by 01-0770028-05)	1			X		X		
150A♦	01-0770006-08	. Power Supply	2					X	X	X
150A	A490T-DF14	. Power Supply – Strobe (Superseded by 01-0770006-08)	2					X	X	X
150B	A490T-DF28	. Power Supply (28V) (Replaced by 01-0770006-08)	2					X		X
160	AN507-632R24	. Screw	4			X		X		
170	AN507-632R14	. Screw	2		X	X	X	X		
180	NAS1149FN632P	. Washer	6			X		X		
180	AN960-6	. Washer (Superseded by NAS1149FN632P)	6			X		X		
190	MS21083N06	. Nut	12			X		X		
190	AN364-632A	. Nut (Superseded by MS21083N06)	12			X		X		
200	980-001	. Channel, Rubber, "U"	AR			X		X		

UNCONTROLLED COPY WHEN DOWNLOADED OR PRINTED

Visit www.enstromhelicopter.com for instructions to order an original manual and to register for email notification updates.

FIGURE 6-6. STROBE AND POSITION LIGHT INSTALLATION (C, F MODELS)

ITEM NUMBER	PART NUMBER	DESCRIPTION	QTY PER ASSY	MODELS AFFECTED						
				F-28A	280	F-28C	280C	F-28F	280F	280FX
210	AN507-632R8	. Screw	6			X		X		
220	AN960-6L	. Washer (Superseded by NAS1149FN616P	17			X		X		
230	A470-R	. Head Assembly – Red (Obsolete)	2			X		X		
240	28-21012-1	. Backing Plate (Obsolete)	1			X		X		
250	AN526-632R6	. Screw	12			X		X		
260	AN365-632A	. Nut	11			X		X		
270	MS35333-37	. Washer	6			X		X		
270	AN936-A6	. Washer (Superseded by MS35333-37)	6			X		X		
280	AN526-632R7	. Screw	5			X		X		
290	5/8-6NA	. Clamp	1			X		X		
300	5310-00-063-9015	. Washer, Saddle	1			X		X		
300	D6-167	. Washer (Superseded by 5310-00-063-9015)	1			X		X		
310	AN526-632R8	. Screw	1			X		X		
320	AN526-832R8	. Screw	12			X		X		X
330	NAS1149FN816P	. Washer	12			X		X		X
330	AN960-8L	. Washer (Superseded by NAS1149FN816P)	12			X		X		X
340	MS21083N08	. Nut	12			X		X		X
340	AN364-832A	. Nut (Superseded by MS21083N08)	12			X		X		X
350	34-0070373-01	. Lamp, Reflector 12 V	4			X		X		
350	34-0070373-03	. Lamp, Reflector 24 V	4			X		X		
350	1512	. Lamp, Reflector (Superseded by 34-0070373-0X)	4			X		X		
360	A469	. Flash Tube	2			X		X		
370	AN526-632R8	. Screw	4					X		X
380	AN507-632R8	. Screw	2					X		X
390	W-1290-14	. Lamp, 12 V	2		X		X	X	X	X
390	W-1290-28	. Lamp, 24 V	2		X		X	X	X	X

UNCONTROLLED COPY WHEN DOWNLOADED OR PRINTED

Visit www.enstromhelicopter.com for instructions to order an original manual and to register for email notification updates.

FIGURE 6-6. STROBE AND POSITION LIGHT INSTALLATION (C, F MODELS)

ITEM NUMBER	PART NUMBER	DESCRIPTION	QTY PER ASSY	MODELS AFFECTED						
				F-28A	280	F-28C	280C	F-28F	280F	280FX
390	34-0428020-65	. Lamp, 24 V (Alternate to W-1290-28)	2		X		X	X	X	X
400	68-2290005-30	. Lens-Clear, Strobe	2		X		X	X	X	X
400	A612	. Lens-Clear, Strobe (Superseded by 68-2290005-30)	2		X		X	X	X	X
410	68-4250066-30	. Lens – Clear (Tail)	2					X		X
410	A615	. Lens-Clear (Tail) (Superseded by 68-4250066-30)	2					X		X
420	A555-H	. Light Assembly (Tail)	1		X		X	X	X	
430	68-4270002-30	. . Lens-Clear (Tail)	1		X		X	X	X	
430	A457A	. . Lens-Clear (Tail) (Superseded by 68-4270002-30)	1		X		X	X	X	
440	34-0412070-63	. . Lamp, Light, 12 V (Tail)	2					X		X
440	A508-14	. . Lamp, Light, 12 V (Tail) (Superseded by 34-0412070-63)	2					X		X

* Effectivity F-28F S/N 833 – subsequent and 280FX S/N 2148 – subsequent.
Eligibility F-28F S/N 509 – subsequent and 280FX S/N 2001 – subsequent.
Installed with Retainer (Qty 1) and Screw (Qty 2) (included as part of light (Item 150 or Item 160 as applicable)).
See Figure 6-5. Item 150 and Item 160.

♦ Equivalent to A490TCF.

UNCONTROLLED COPY WHEN DOWNLOADED OR PRINTED
Visit www.enstromhelicopter.com for instructions to order an original manual and to register for email notification updates.

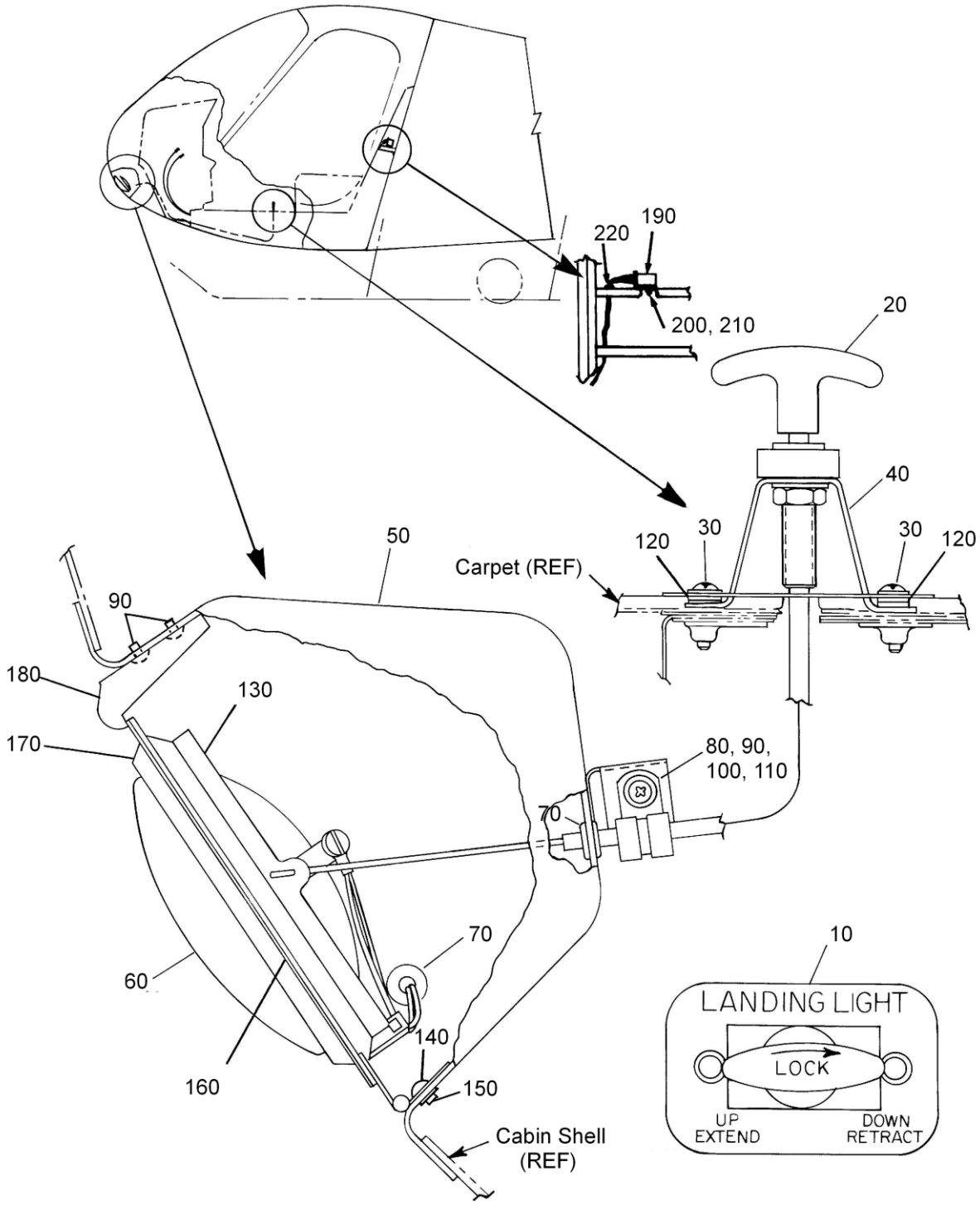

FIGURE 6-7. FORWARD LANDING LIGHT INSTALLATION (F-28C, F-28F)

UNCONTROLLED COPY WHEN DOWNLOADED OR PRINTED
Visit www.enstromhelicopter.com for instructions to order an original manual and to register for email notification updates.

FIGURE 6-7. FORWARD LANDING LIGHT INSTALLATION (F-28C, F-28F)

ITEM NUMBER	PART NUMBER	DESCRIPTION	QTY PER ASSY	MODELS AFFECTED						
				F-28A	280	F-28C	280C	F-28F	280F	280FX
–	28-21053-3	Light Installation – Forward Landing	REF			X		X		
–	28-21052-1	Holder & Housing Assembly (Forward)	REF			X		X		
10	28-21035-5	. Placard (Light Landing)	1			X		X		
20	28-21024-1	. Cable Assembly	1			X		X		
30	AN526-832R10	. Screw	2			X		X		
40	28-21034-1	. Bracket	1			X		X		
*50	28-21051-11	. Housing	1			X		X		
60	4509	. Lamp: 13 Volt, 110000 C/P	1			X		X		
70	MS35489-6	. Grommet	1			X		X		
70	AN931-4-7	. Grommet (Superseded by MS35489-6)	1			X		X		
80	MS21919WDG3	. Clamp (AL)	1			X		X		
90	AN526-832R8	. Screw	3			X		X		
100	NAS1149FN816P	. Washer	2			X		X		
100	AN960-8L	. Washer (Superseded by NAS1149FN816P)	2			X		X		
110	MS21083N08	. Nut	1			X		X		
110	AN364-832A	. Nut (Superseded by MS21083N08)	1			X		X		
120	NAS1149FN832P	. Washer	4			X		X		
120	AN960-8	. Washer (Superseded by NAS1149FN832P)	4			X		X		
130	28-21043-1	. Lens Holder Assembly	1			X		X		
140	MS20470AD3-4	. Rivet	4			X		X		
150	NAS1149FN316P	. Washer	4			X		X		
150	AN960-3L	. Washer (Superseded by NAS1149FN316P)	4			X		X		
160	AN526-632R8	. Screw	4			X		X		
170	28-21009-1	. Lens Clamp	1			X		X		

UNCONTROLLED COPY WHEN DOWNLOADED OR PRINTED
Visit www.enstromhelicopter.com for instructions to order an original manual and to register for email notification updates.

FIGURE 6-7. FORWARD LANDING LIGHT INSTALLATION (F-28C, F-28F)

ITEM NUMBER	PART NUMBER	DESCRIPTION	QTY PER ASSY	MODELS AFFECTED						
				F-28A	280	F-28C	280C	F-28F	280F	280FX
180	28-21050-11	. Stop	1			X		X		
190	97CSX-2 24VDC	. Relay, Power, 24 VDC	1			X		X		
190	W97CSX-2	. Relay (Superseded by 97CSX-2 24VDC)	1			X		X		
200	NAS1149FN832P	. Washer (0.032)	1			X		X		
200	AN960-8	. Washer (Superseded by NAS1149FN832P)	1			X		X		
210	MS21083N08	. Nut	1			X		X		
210	AN364-832A	. Nut (Superseded by MS21083N08)	1			X		X		
220	MS35489-6	. Grommet	1			X		X		
220	AN931-4-7	. Grommet (Superseded by MS35489-6)	1			X		X		

* This part is bonded to the cabin.

UNCONTROLLED COPY WHEN DOWNLOADED OR PRINTED
Visit www.enstromhelicopter.com for instructions to order an original manual and to register for email notification updates.

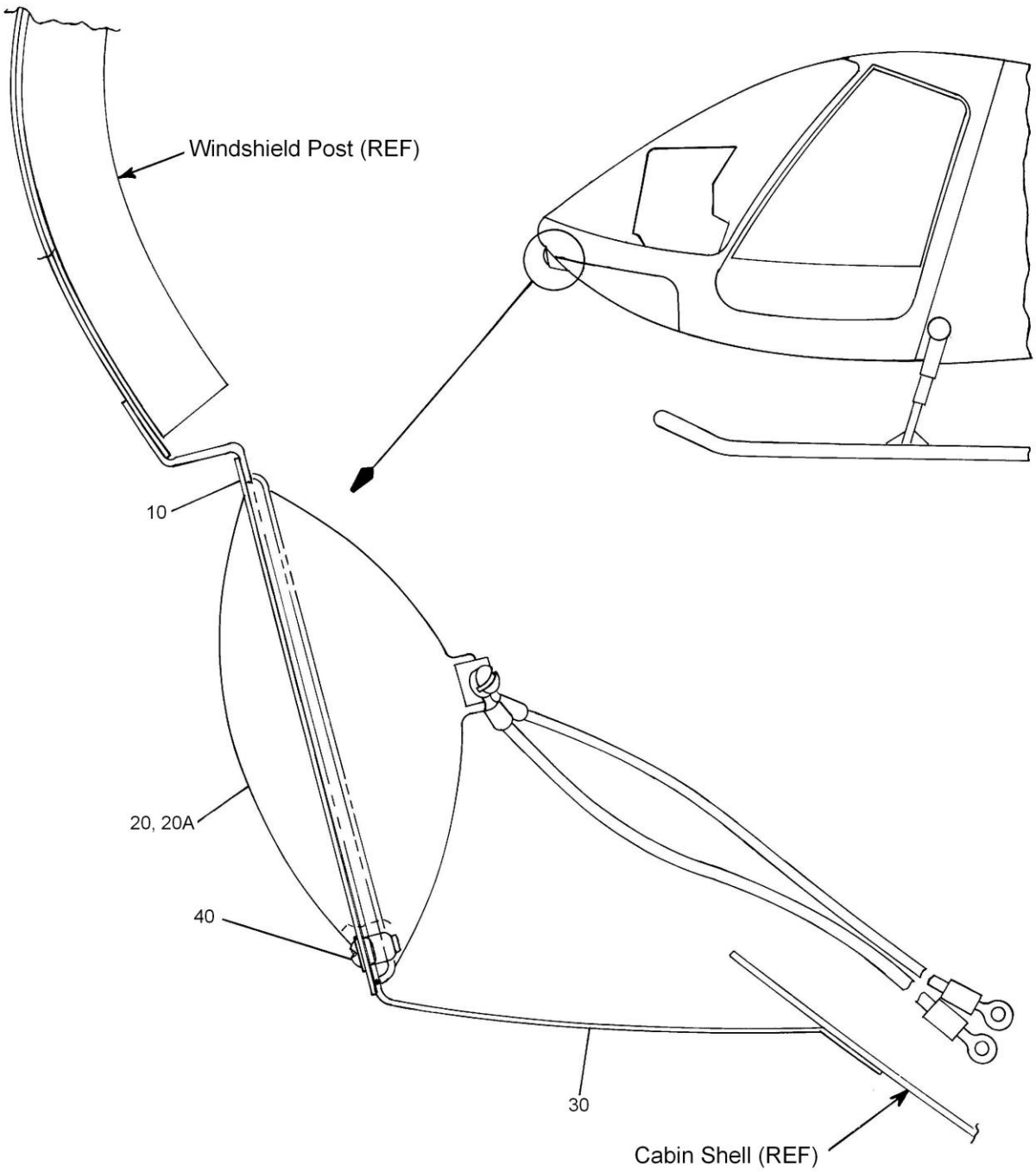

FIGURE 6-8. FORWARD LANDING LIGHT INSTALLATION (280 SERIES)

UNCONTROLLED COPY WHEN DOWNLOADED OR PRINTED
Visit www.enstromhelicopter.com for instructions to order an original manual and to register for email notification updates.

FIGURE 6-8. FORWARD LANDING LIGHT INSTALLATION (280 SERIES)

ITEM NUMBER	PART NUMBER	DESCRIPTION	QTY PER ASSY	MODELS AFFECTED						
				F-28A	280	F-28C	280C	F-28F	280F	280FX
10	28-21009-1	. Lens Clamp	1		X		X		X	X
20	4509	. Lamp 13V	1		X		X		X	X
20A	4596	. Lamp: Landing 28 V	1						X	X
30*	280-210007-3	. Fairing Assembly	1							X
–	280-210007-13	. . Housing	1							X
–	CCR264-SS3-3	. . Rivet	8							X
–	NAS636A08	. . Anchor Nut	4							X
30*	280-210007-1	. Fairing Assembly	1		X		X		X	
–	280-210007-11	. . Housing	1		X		X		X	
–	CCR264-SS3-3	. . Rivet	8		X		X		X	
–	NAS636A08	. . Anchor Nut	4		X		X		X	
40	AN526-832R8	. Screw	4		X		X		X	X

* This part is bonded to the cabin.

UNCONTROLLED COPY WHEN DOWNLOADED OR PRINTED

Visit www.enstromhelicopter.com for instructions to order an original manual and to register for email notification updates.

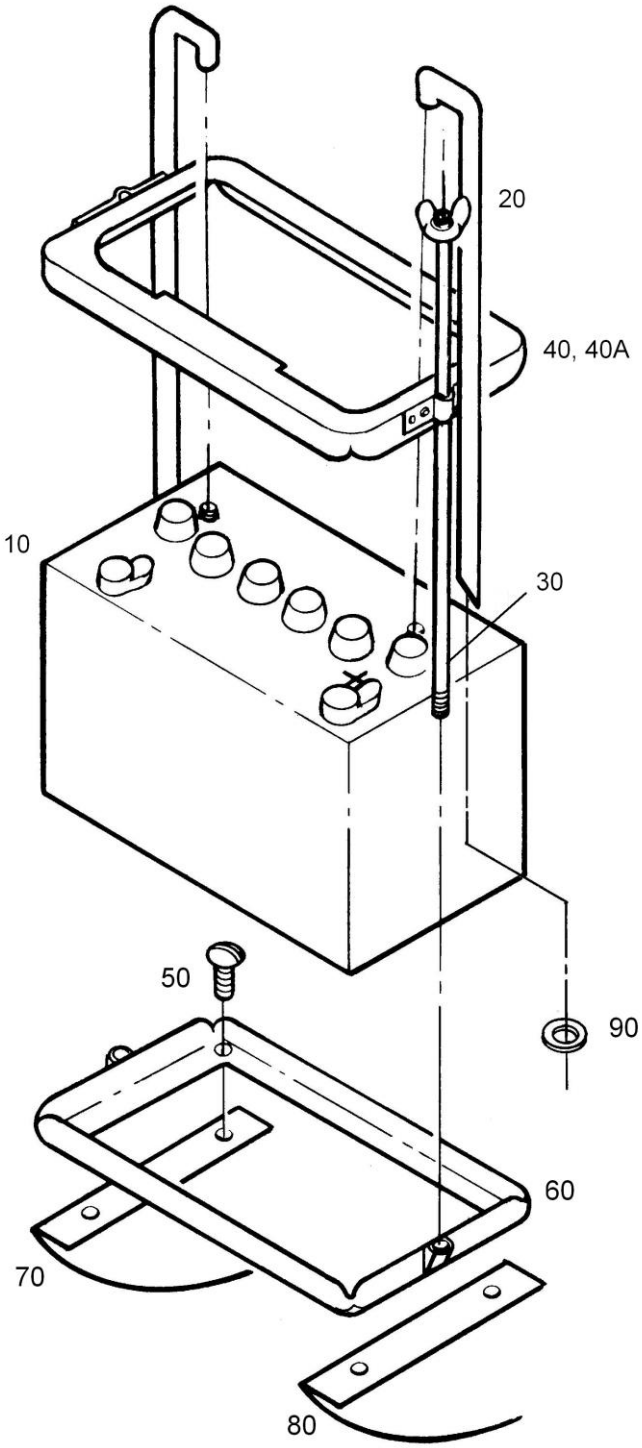

FIGURE 6-9. BATTERY INSTALLATION (F-28A, 280)

UNCONTROLLED COPY WHEN DOWNLOADED OR PRINTED
Visit www.enstromhelicopter.com for instructions to order an original manual and to register for email notification updates.

FIGURE 6-9. BATTERY INSTALLATION (F-28A, 280)

ITEM NUMBER	PART NUMBER	DESCRIPTION	QTY PER ASSY	MODELS AFFECTED						
				F-28A	280	F-28C	280C	F-28F	280F	280FX
10	AC78M	. Exide Battery (or Equivalent)	1	X	X					
20	64021	. Vent Line (or Equivalent)	2	X	X					
30	28-19106-5	. Rod Assembly	2	X	X					
30	28-19106-3	. Rod Assembly (Superseded by 28-19106-5)	2	X	X					
30	28-19106-1	. Rod (Superseded by 28-19106-3)	2	X	X					
40	28-19104-1	. Top Battery Retainer Assembly	1	X	X					
50	AN507-832-16	. Screw	4	X	X					
60	28-19105-1	. Bottom Battery Retainer Assembly	1	X	X					
70	28-11360-1	. Support Bulkhead	1	X	X					
80	280-113019-31	. Support Battery Seat	2	X	X					
90	AN931-8-13	. Grommet	2	X	X					

Note: Item #4 may require changing when a battery other than AC78M is installed.

UNCONTROLLED COPY WHEN DOWNLOADED OR PRINTED
Visit www.enstromhelicopter.com for instructions to order an original manual and to register for email notification updates.

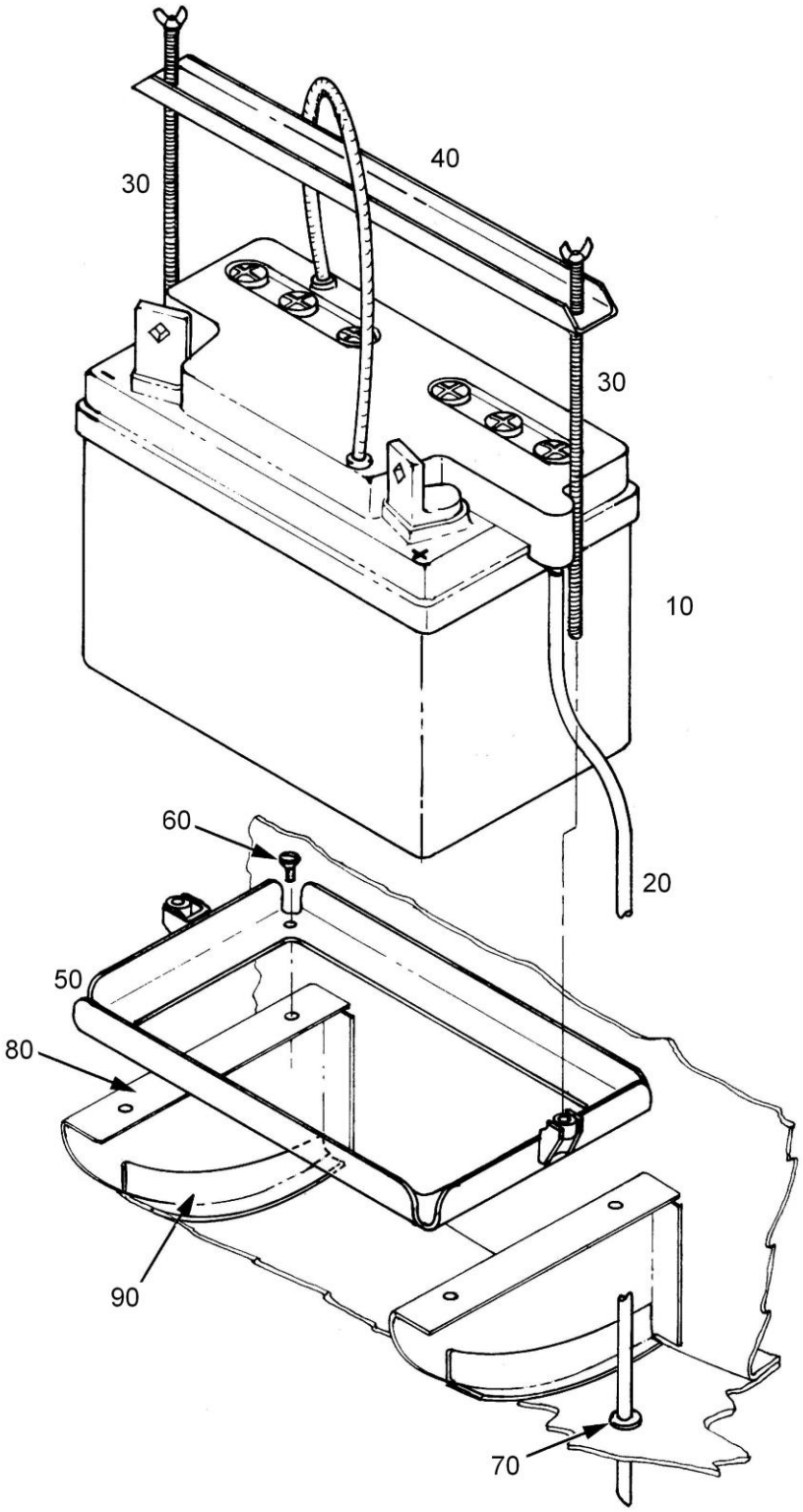

FIGURE 6-10. 12 VOLT BATTERY INSTALLATION (C, F, FX Models)

UNCONTROLLED COPY WHEN DOWNLOADED OR PRINTED
Visit www.enstromhelicopter.com for instructions to order an original manual and to register for email notification updates.

FIGURE 6-10. 12 VOLT BATTERY INSTALLATION (C, F, FX Models)

ITEM NUMBER	PART NUMBER	DESCRIPTION	QTY PER ASSY	MODELS AFFECTED						
				F-28A	280	F-28C	280C	F-28F	280F	280FX
10	RG-35	. Battery 12V	1			X	X	X	X	X
10	R35M	. Battery 12 V	1			X	X	X	X	X
10	CB35M	. Battery 12V	1			X	X	X	X	X
20	300-037	. Vent Tubing	A/R			X	X	X	X	X
30	28-19106-5	. Rod Assembly	2			X	X	X	X	X
30	28-19106-3	. Rod Assembly (Superseded by 28-19106-5)	2			X	X	X	X	X
40	28-19103-1	. Battery Retainer Assembly (Top)	1			X	X	X	X	X
50	28-19105-1	. Bottom Battery Retainer Assembly	1			X	X	X	X	X
60	AN525-832R8	. Screw	4			X	X	X	X	X
60	AN526-832R8	. Screw (Superseded by AN525-832R8)	4			X	X	X	X	X
70	MS35489-6	. Grommet	1			X	X	X	X	X
70	AN931-4-7	. Grommet (Superseded by MS35489-6)	1			X	X	X	X	X
80	280-113016-29	. Battery Support	2			X	X	X	X	X
90	280-113016-31	. Stiffener	2			X	X	X	X	X

UNCONTROLLED COPY WHEN DOWNLOADED OR PRINTED

Visit www.enstromhelicopter.com for instructions to order an original manual and to register for email notification updates.

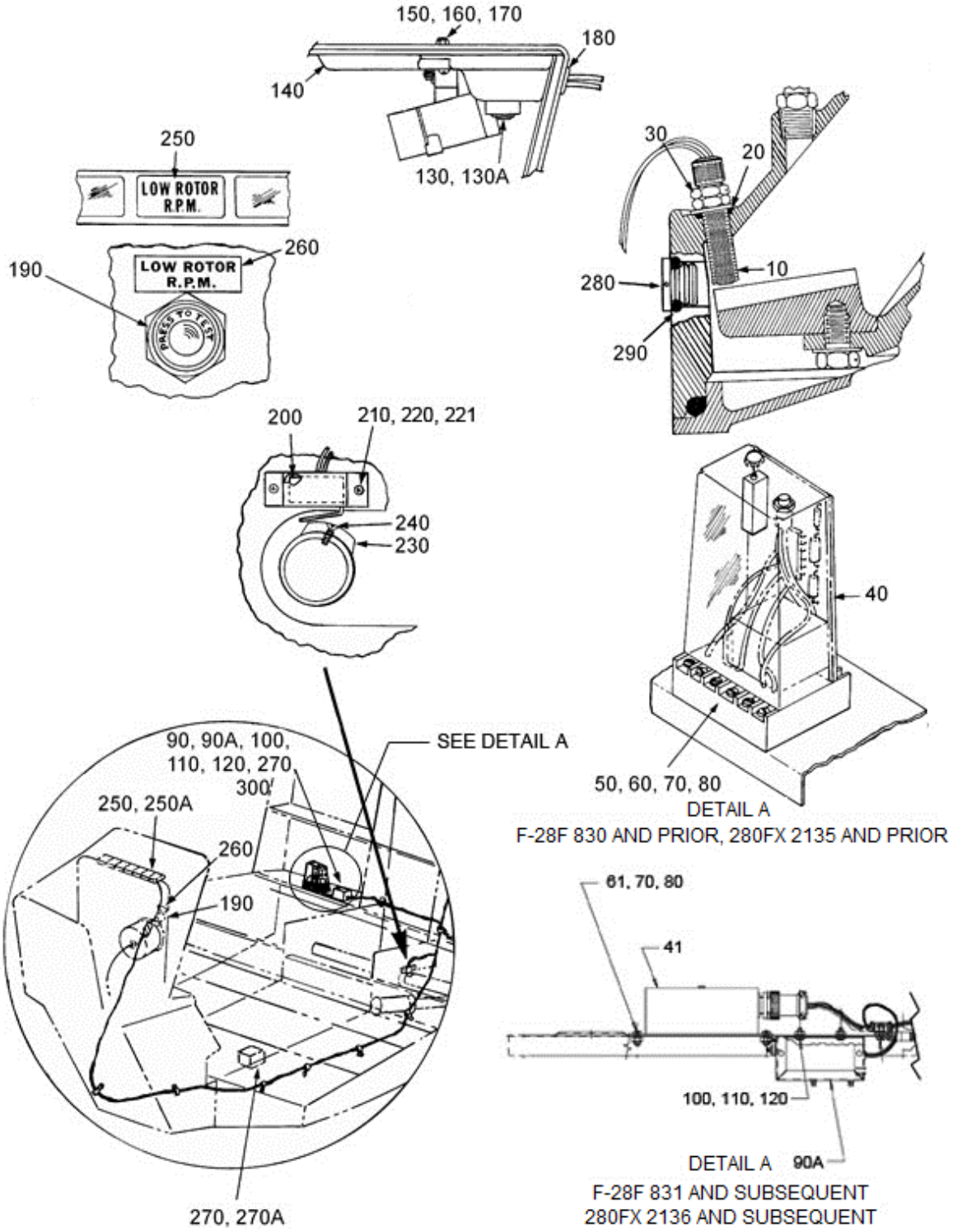

FIGURE 6-11. ANNUNCIATOR SYSTEMS INSTALLATION

UNCONTROLLED COPY WHEN DOWNLOADED OR PRINTED
Visit www.enstromhelicopter.com for instructions to order an original manual and to register for email notification updates.

FIGURE 6-11. ANNUNCIATOR SYSTEMS INSTALLATION

ITEM NUMBER	PART NUMBER	DESCRIPTION	QTY PER ASSY	MODELS AFFECTED						
				F-28A	280	F-28C	280C	F-28F	280F	280FX
10	4192509-901	. Magnetic Pickup	1					X		X
–	1-480319-0	. . Housing: Cap, 2P Pin Contact	1					X		X
–	60618-1	. . Contact: Pin, 30-22 AWG (0.058")	2					X		X
–	726621	. Magnetic Pickup	1					X		X
20	MS28778-4	. O-ring	1					X		X
30	AN316-6R	. Nut, Jam, 3/8-24 UNF-3B RH	1					X		X
40	726607	. Amplifier	1					X		X
41	ECD4079-1	. Hi-Low Rotor Switch	1					X		X
50	58390	. Socket, In-Line, Speed Module	1					X		X
60	AN515-8R14	. Screw	2					X		X
61	MS35206-244	. Screw	4					X		X
70**	NAS1149FN832P	. Washer (0.032)	6					X		X
80**	MS21083N08	. Nut	2					X		X
90	ECD073-1	. Tone Generator Assembly (12 Volt)	1					X		X
90A	ECD073-3	. Tone Generator Assembly (24 Volt)	1					X		X
100	MS35206-228	. Screw	2					X		X
110	NAS1149FN632P	. Washer	4					X		X
120	MS21044N06	. Nut	2					X		X
130	SC628ANPR	. Horn: Pulse, Loud Fast Tone	1					X		X
130	SC616NJ	. Horn: Pulse, Loud Slow Tone (Superseded by SC628ANPR)	1					X		X
140*	28-116002-13	. Cover	1					X		X
140*	28-116002-15	. Cover (24V system)	1					X		X
150*	AN525-832R14	. Screw	2					X		X

UNCONTROLLED COPY WHEN DOWNLOADED OR PRINTED
Visit www.enstromhelicopter.com for instructions to order an original manual and to register for email notification updates.

FIGURE 6-11. ANNUNCIATOR SYSTEMS INSTALLATION

ITEM NUMBER	PART NUMBER	DESCRIPTION	QTY PER ASSY	MODELS AFFECTED						
				F-28A	280	F-28C	280C	F-28F	280F	280FX
160	MS21083N08	. Nut	5					X		X
170	AN960-8	. Washer	4					X		X
180	AN931-4-7	. Grommet	1					X		X
190	803-1710-0331-504	. Indicator Light	1					X		
200	28-132022-2	. Micro-Switch Assembly	1					X		X
200Δ	28-132022-3	. Micro-Switch Assembly	1					X		X
210	AN526-832R10	. Screw	2					X		X
210Δ	AN526-832R7	. Screw	2					X		X
220	AN960-8	. Washer	4					X		X
220Δ	NAS1149DN832H	. Washer	4					X		X
221	AN365-832A	. Locknut	2					X		X
221Δ	MS21044N08	. Nut	2					X		X
–Δ	4199072-11	. Actuator Contactor Positioner	1					X		X
–	CR3213-5-04	. . Rivet	2					X		X
–	MS16998-10L	. . Cap Screw	1					X		X
–	NAS620-6L	. . Washer	1					X		X
230Δ	28-16650-11	. Actuator Contactor	1					X		X
230†	28-19048-13	. Block (Alternate)	1					X		X
230	28-19048-11	. Block	1					X		X
240	AN509-832R4	. Screw	2					X		X
250	28-19047-11	. “Low Rotor RPM” Filter	1							X
250	28-19047-1	. “Low Rotor RPM” Filter (Superseded by 28-19047-1)	1							X
260	28-18143-11	. Placard (Low Rotor RPM)	1					X		
270	R10-E6-Y2-V185	. Relay, Socket, 12VDC	2					X		X
270	R10-E6-X2-V700	. Relay 24 Volt	2					X		X
–	28-19041-111	. Relay Box Assembly	1					X		X
–	28-19131-1	. . Mini Box Assembly	1					X		X

UNCONTROLLED COPY WHEN DOWNLOADED OR PRINTED
Visit www.enstromhelicopter.com for instructions to order an original manual and to register for email notification updates.

FIGURE 6-11. ANNUNCIATOR SYSTEMS INSTALLATION

ITEM NUMBER	PART NUMBER	DESCRIPTION	QTY PER ASSY	MODELS AFFECTED						
				F-28A	280	F-28C	280C	F-28F	280F	280FX
–	MS35206-230	. . Screw	2					X		X
–	NAS1149FN616P	. . Washer	4					X		X
–	MS21083N06	. . Nut	2					X		X
–	NS35649-262	. . Nut	2					X		X
–	MS35489-4	. . Grommet	1					X		X
–	NAS1149FN616P	. Washer	2					X		X
–	AN365-632A	. Nut	2					X		X
280	28-14368-1	. Grip	1					X		X
290	MS28775-116	. O-Ring	1					X		X
300	CBLS18C	. Circuit Board Support	1					X		X

* Remount Map Light, if installed, when replacing these parts.

** Quantity of four (4) when used with ECD4079-1.

† Required if three collective up switches are installed.

Δ F-28F S/N 832 – subsequent and 280FX S/N 2147 – subsequent.

UNCONTROLLED COPY WHEN DOWNLOADED OR PRINTED

Visit www.enstromhelicopter.com for instructions to order an original manual and to register for email notification updates.

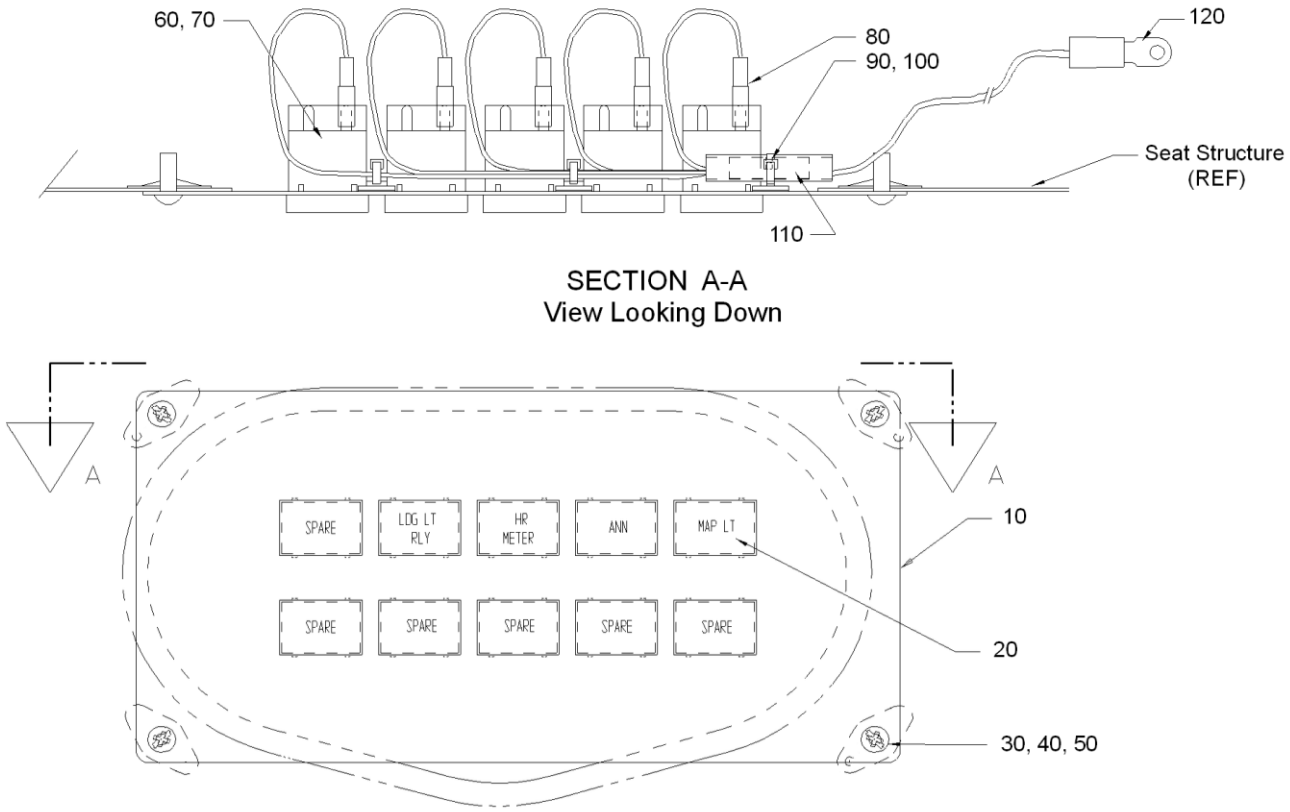

FIGURE 6-12. FUSE PANEL (F-28F, 280FX)

UNCONTROLLED COPY WHEN DOWNLOADED OR PRINTED
Visit www.enstromhelicopter.com for instructions to order an original manual and to register for email notification updates.

FIGURE 6-12. FUSE PANEL (F-28F, 280FX)

ITEM NUMBER	PART NUMBER	DESCRIPTION	QTY PER ASSY	MODELS AFFECTED						
				F-28A	280	F-28C	280C	F-28F	280F	280FX
–	28-19073	Fuse Panel Install	REF					X		X
10	28-18167-19	. Panel (Fuse 4 Holes)	A/R					X		X
10	28-18167-11	. Panel (Fuse 5 Holes)	A/R					X		X
10	28-18167-13	. Panel (Fuse 6 Holes)	A/R					X		X
10	28-18167-15	. Panel (Fuse 7 Holes)	A/R					X		X
10	28-18167-17	. Panel (Fuse 8 Holes)	A/R					X		X
10	28-18167-21	. Panel (Fuse 9 Holes)	A/R					X		X
10	28-18167-23	. Panel (Fuse 10 Holes)	A/R					X		X
10	28-18167-25	. Panel (Fuse 5 Holes Plus Hour Meter)	A/R					X		X
10	28-18167-27	. Panel (Fuse 10 Holes Plus Hour Meter)	A/R					X		X
20	4119835-33	. Avionics Placards	1					X		X
30	6X3/8	. Screw	4					X		X
40	A06191-8Z-1D	. Nut Plate	4					X		X
40	C6191-8Z-1	. Nut, Tinnerman (Superseded by 12LHTA17M-62)	4					X		X
50	NAS1097AD3-3	. Rivet	4					X		X
50	MS20426AD3-3	. Rivet (Superseded by NAS1097AD3-3)	4					X		X
60†	286377	. Holder, Fuse, 2 Ag Flip-Top	A/R					X		X
70*†	229001P	. Fuse (Slo-Blo, 1A 2AG Cartridge)	A/R					X		X
80†	AA-2204	. Terminal, Q/D, 0.110" (22-18) FM	A/R					X		X
90	ABM1M-A-C	. Mount: Tie, 0.500" Sq. Cable	3					X		X
100	SST1M-MP	. Tie, Cable, 4" (0.100") Nylon	3					X		X
110	CS-N-346	. Splice	1					X		X
120	C-836-06	. Terminal, Ring, #5-6, 12-10 AWG	1					X		X
120	AA8131	. Terminal (Superseded by C-836-06)	1					X		X

* Amperage capacity determined by circuit requirements.

† Quantities vary depending on the number of fuses in the selected panel.

UNCONTROLLED COPY WHEN DOWNLOADED OR PRINTED

Visit www.enstromhelicopter.com for instructions to order an original manual and to register for email notification updates.

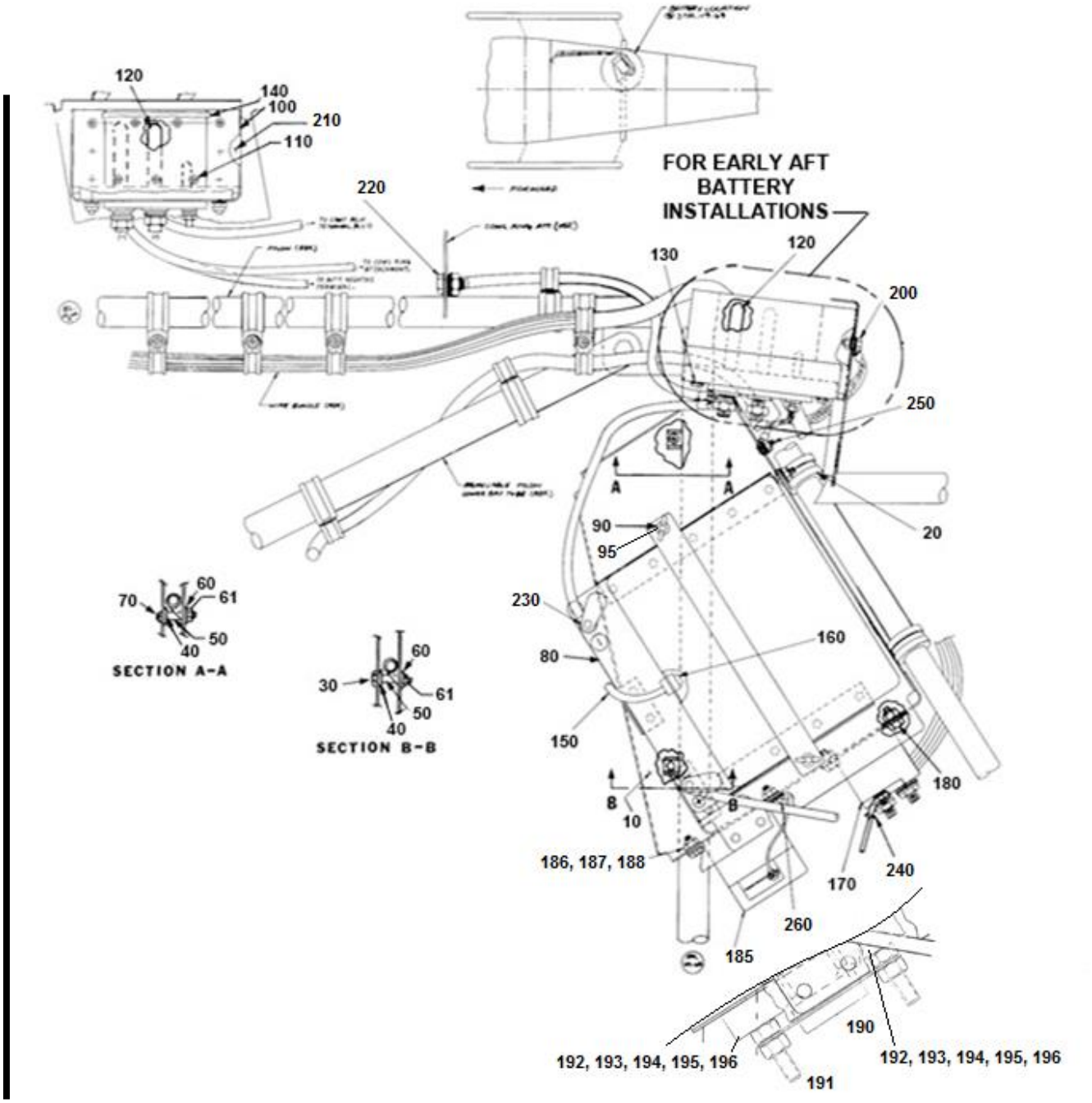

FIGURE 6-13. 24 VOLT BATTERY INSTALLATION (ALL MODELS)

UNCONTROLLED COPY WHEN DOWNLOADED OR PRINTED
Visit www.enstromhelicopter.com for instructions to order an original manual and to register for email notification updates.

FIGURE 6-13. 24 VOLT BATTERY INSTALLATION (ALL MODELS)

ITEM NUMBER	PART NUMBER	DESCRIPTION	QTY PER ASSY	MODELS AFFECTED						
				F-28A	280	F-28C	280C	F-28F	280F	280FX
10	28-22561-3	. Battery Retainer Assembly (Aft)	1	X	X	X	X	X	X	X
20	MS21919WDG12	. Clamp	2	X	X	X	X	X	X	X
20	MS21919-DG12	. Clamp (Superseded by MS21919WDG12)	2	X	X	X	X	X	X	X
–	AN526-1032R8	. Screw	2	X	X	X	X	X	X	X
–	NAS1149F0363P	. Washer (0.063")	2	X	X	X	X	X	X	X
–	AN960-10	. Washer (Superseded by NAS1149F0363P)	2	X	X	X	X	X	X	X
–	MS21083N3	. Nut	2	X	X	X	X	X	X	X
–	AN364-1032A	. Nut (Superseded by MS21083N3)	2	X	X	X	X	X	X	X
30	AN3-14A	. Bolt	1	X	X	X	X	X	X	X
40	NAS1149F0332P	. Washer	2	X	X	X	X	X	X	X
40	AN960-10L	. Washer (Superseded by NAS1149F0332P)	2	X	X	X	X	X	X	X
50	28-22562-17	. Spacer	2	X	X	X	X	X	X	X
60	NAS1149F0332P	. Washer	2	X	X	X	X	X	X	X
60	AN960-10L	. Washer (Superseded by NAS1149F0332P)	2	X	X	X	X	X	X	X
61	AN365-1032A	. Nut	2	X	X	X	X	X	X	X
70	AN525-10R24	. Screw	1	X	X	X	X	X	X	X
80	RG24-11M	. Battery	1	X	X	X	X	X	X	X
80	G-243	. Battery 24V (Alternate)	1	X	X	X	X	X	X	X
90	28-19106-5	. Rod Assembly	2	X	X	X	X	X	X	X
95	AN970-3	. Washer	2	X	X	X	X	X	X	X
100	28-22563-5	. Bracket Assembly	1	X	X	X	X	X	X	X
110	CR3213-4-2	. Rivet	6	X	X	X	X	X	X	X
120	AN2552-3A	. Receptacle	1	X	X	X	X	X	X	X
130	AN507-1032R14	. Screw	2	X	X	X	X	X	X	X
–	NAS1149F0332P	. Washer	2	X	X	X	X	X	X	X
–	AN960-10L	. Washer (Superseded by NAS1149F0332P)	2	X	X	X	X	X	X	X

UNCONTROLLED COPY WHEN DOWNLOADED OR PRINTED

Visit www.enstromhelicopter.com for instructions to order an original manual and to register for email notification updates.

FIGURE 6-13. 24 VOLT BATTERY INSTALLATION (ALL MODELS)

ITEM NUMBER	PART NUMBER	DESCRIPTION	QTY PER ASSY	MODELS AFFECTED						
				F-28A	280	F-28C	280C	F-28F	280F	280FX
–	MS21083N3	. Nut	2	X	X	X	X	X	X	X
–	AN364-1032A	. Nut (Superseded by MS21083N3)	2	X	X	X	X	X	X	X
140	28-19055-11	. Placard (Ext. Power 28 Volt)	1	X	X	X	X	X	X	X
150	1/4” O.D. X 24” Long	. Vinyl Plastic Tube	1	X	X	X	X	X	X	X
160	1/8”	. Nylon Straight Connector	1	X	X	X	X	X	X	X
170	SAZ-4401-1	. Starter Relay 24V	1	X	X	X	X	X	X	X
180	AN4-3A	. Bolt	2					X		X
–	NAS1149F0432P	. Washer	2					X		X
–	AN960-416L	. Washer (Superseded by NAS1149F0432P)	2					X		X
–	AN364-428A	. Nut	2					X		X
185	7235-1-100	. Breaker, Circuit, 100A Thermal (Superseded by ANL80)	1					X		X
186	AN3-4A	. Bolt	1					X		X
187	NAS1149F0332P	. Washer	2					X		X
187	AN960-10L	. Washer (Superseded by NAS1149F0332P)	2					X		X
188	MS21083N3	. Nut	1					X		X
188	AN364-1032A	. Nut (Superseded by MS21083N3)	1					X		X
190	ANL80	. Limiter, Current	1					X		X
191*	4164	. Block: Fuse	1					X		X
192*	MS24694-S58	. Screw	2					X		X
192*	AN509-10R16	. Screw (Superseded by MS24694-S58)	2					X		X
193*	NAS1149F0363P	. Washer (0.063")	2					X		X
193*	AN960-10	. Washer (Superseded by NAS1149F0363P)	2					X		X
194*	NAS1149F0332P	. Washer	2					X		X
194*	AN960-10L	. Washer (Superseded by NAS1149F0332P)	2					X		X
195*	MS21083N3	. Nut	2					X		X

UNCONTROLLED COPY WHEN DOWNLOADED OR PRINTED
Visit www.enstromhelicopter.com for instructions to order an original manual and to register for email notification updates.

FIGURE 6-13. 24 VOLT BATTERY INSTALLATION (ALL MODELS)

ITEM NUMBER	PART NUMBER	DESCRIPTION	QTY PER ASSY	MODELS AFFECTED						
				F-28A	280	F-28C	280C	F-28F	280F	280FX
195*	AN364-1032A	. Nut (Superseded by MS21083N3)	2					X		X
196*	AN960-C516L	. Washer	2					X		X
200	28-01011-3	. Ground Strap Assembly	1					X		X
–	AN3-6A	. Bolt	1					X		X
–	AN960-10	. Washer	2					X		X
–	AN935-10	. Washer (#10)	1					X		X
–	AN345-10	. Nut	1					X		X
210	28-10-60-11	. Spacer	1					X		X
220	AN5-4A	. Bolt	1					X		X
–	AN936A516	. Washer	1					X		X
–	NAS1149F0532P	. Washer	2					X		X
–	AN960-516L	. Washer (Superseded by NAS1149F0532P)	2					X		X
–	AN341-516	. Nut	1					X		X
230	MS25171-3S	. Nipple	5					X		X
240	MS25171-1S	. Nipple	1					X		X
250	AN526-832R8	. Screw	1					X		X
–	MS35338-42	. Washer (#8 Light)	1					X		X
–	AN935-8	. Washer (Superseded By MS35338-42)	1					X		X
–	NAS1149FN832P	. Washer (0.032)	1					X		X
–	AN960-8	. Washer (Superseded by NAS1149FN832P)	1					X		X
–	MS35649-282	. Nut	1					X		X
–	AN340-8	. Nut (Superseded By MS35649-282)	1					X		X
260	AN3-4A	. Bolt (Use with 7235-1-100)	2					X		X
–	NAS1149F0332P	. Washer (Use with 7235-1-100)	2					X		X
–	AN960-10L	. Washer (Superseded by NAS1149F0332P)	2					X		X
–	MS21083N3	. Nut (Use with 7235-1-100)	2					X		X

UNCONTROLLED COPY WHEN DOWNLOADED OR PRINTED

Visit www.enstromhelicopter.com for instructions to order an original manual and to register for email notification updates.

FIGURE 6-13. 24 VOLT BATTERY INSTALLATION (ALL MODELS)

ITEM NUMBER	PART NUMBER	DESCRIPTION	QTY PER ASSY	MODELS AFFECTED						
				F-28A	280	F-28C	280C	F-28F	280F	280FX
–	AN364-1032A	. Nut (Superseded by MS21083N3)	2					X		X

* Effectivity F-28F S/N 815 – subsequent and 280FX S/N 2089 – subsequent.

UNCONTROLLED COPY WHEN DOWNLOADED OR PRINTED
Visit www.enstromhelicopter.com for instructions to order an original manual and to register for email notification updates.

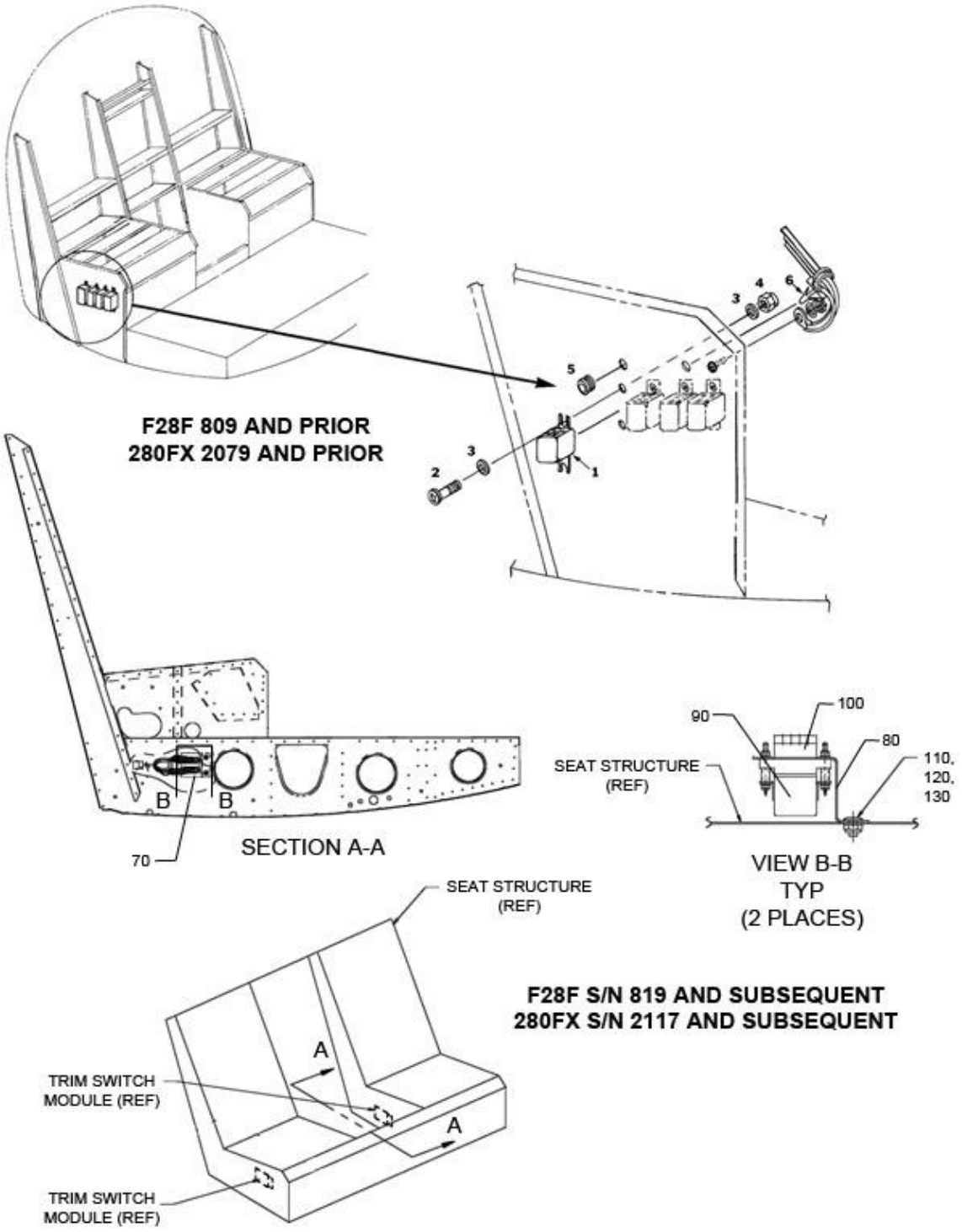

FIGURE 6-14. TRIM RELAY INSTALLATION 24 VOLT (F-28F, 280FX)

UNCONTROLLED COPY WHEN DOWNLOADED OR PRINTED
Visit www.enstromhelicopter.com for instructions to order an original manual and to register for email notification updates.

FIGURE 6-14. TRIM RELAY INSTALLATION 24 VOLT (F-28F, 280FX)

ITEM NUMBER	PART NUMBER	DESCRIPTION	QTY PER ASSY	MODELS AFFECTED						
				F-28A	280	F-28C	280C	F-28F	280F	280FX
–*	28-19040-5	Wire Install. – Motor, Cyclic Trim	REF					X		X
10*	KUP-14D55-24	. Relay: Trim, 24V 10A 3PDT	4					X		X
10*	KUP-14D55-472	. Relay (Superseded by KUP-14D55-24)	4					X		X
20*	AN526-632R5	. Screw	8					X		X
30*	AN960-6L	. Washer	16					X		X
40*	MS21083N06	. Nut	8					X		X
40*	AN364-632A	. Nut (Superseded by MS21083N06)	8					X		X
50*	AN931-6-10	. Grommet (0.625)	1					X		X
60*	PWMS-H25-C	. Mount, Push, Cable Tie	1					X		X
–*	B-00375-4	. Sensor Low Voltage 12 Volt	1					X		X
–*	B-00378-5	. Sensor, Low Voltage, 28 Volt	1					X		X
–	28-16030-3	Trim Switch Module Installation (28V)	REF					X		X
–	28-16030-1	Trim Switch Module Installation (14V)	REF					X		X
70	4199059-3	. Trim Switch Module (28V)	2					X		X
70	28-19025-1	. Trim Switch Module (14V)						X		X
70**†	4199059-1	. Trim Switch Module (12V & 24V) (Superseded by 4199059-3 or 28-19025-1)	2					X		X
80	4196609-11	. . Bracket	1					X		X
90	J-D4N-300M	. . Relay 28VDC Coil (Use with 4199059-3)	2					X		X
90	M83536/10-024M	. . Relay (28V) (Superseded by J-D4N-300M)	2					X		X
90	M83536/10-015M	. . Relay (14V) (Use with 28-19025-1)	2					X		X
100	M12883/41-14	. . Socket	2					X		X
110	AN526-1032R6	. Screw	4					X		X
120	AN960-10L	. Washer	4					X		X
130	AN364-1032A	. Nut	4					X		X

UNCONTROLLED COPY WHEN DOWNLOADED OR PRINTED
Visit www.enstromhelicopter.com for instructions to order an original manual and to register for email notification updates.

* Obsolete. Upgrade to current installation using 28-01062-111 Trim Relay Conversion Kit (28V)

** Installed on F28F S/N 810 through 818 and 280FX S/N 2080 through 2116.

† Obsolete. Upgrade to current 28V installation using 28-01062-111 Trim Relay Conversion Kit (28V). For F28F S/N 815 and 280FX S/N 2092, upgrade to current 14V installation using 28-01062-113 Trim Relay Conversion Kit (14V).

UNCONTROLLED COPY WHEN DOWNLOADED OR PRINTED
Visit www.enstromhelicopter.com for instructions to order an original manual and to register for email notification updates.

SECTION 7

STRUCTURES

TABLE OF CONTENTS

	Cover Page
	Table of Contents
7-1	Windows, Doors and Compartment Enclosures (F-28A, F-28C)
7-1A	Door Hardware Details
7-1B	F-28F Cabin Door (F-28A, “C” and “F”)
7-2	Window Installation
7-2A	F-28F Cabin Door Assembly (F-28F, S/N 744 & Sub)
7-2B	Sections Through Door Latches & Lugs
7-2C	Section Through Door Hinge Assembly
7-2D	Section Details on Vent Windows
7-3	Cowling (F-28A, F-28C)
7-3A	Cowling (280, 280C)
7-4	Windows, Doors & Compartment Enclosure (280 - 280FX)
7-4A	280F Cabin Door (280 - 280FX)
7-4B	280 Cabin Door Lock Installation (280 - 280FX)
7-4C	280FX Cabin Doors Assembly/Installation
7-4D	280FX Cabin Closeout Installation
7-5	Engine Compartment Enclosures (F-28C - 280FX)
7-6	Three Piece Airscoop (280FX)
7-7	Cabin Assembly Installation
7-8	Pylon Assembly to Tailcone
7-9	Tailcone Bulkhead and Skin Enclosures
7-10	Stabilizer and Tailcone Extension (F-28A, F-28C, F-28F)
7-11	Stabilizer and Tailcone Extension (280, 280C, 280F)
7-12	Stabilizer and Tailcone Extension (F-28F, 280FX)
7-12A	Tail Rotor Driveshaft Cover
7-13	Pylon Assembly to Landing Gear
7-14	Landing Gear Assembly
7-14A	Oleo Strut Assembly

UNCONTROLLED COPY WHEN DOWNLOADED OR PRINTED

Visit www.enstromhelicopter.com for instructions to order an original manual and to register for email notification updates.

INTENTIONALLY LEFT BLANK

UNCONTROLLED COPY WHEN DOWNLOADED OR PRINTED

Visit www.enstromhelicopter.com for instructions to order an original manual and to register for email notification updates.

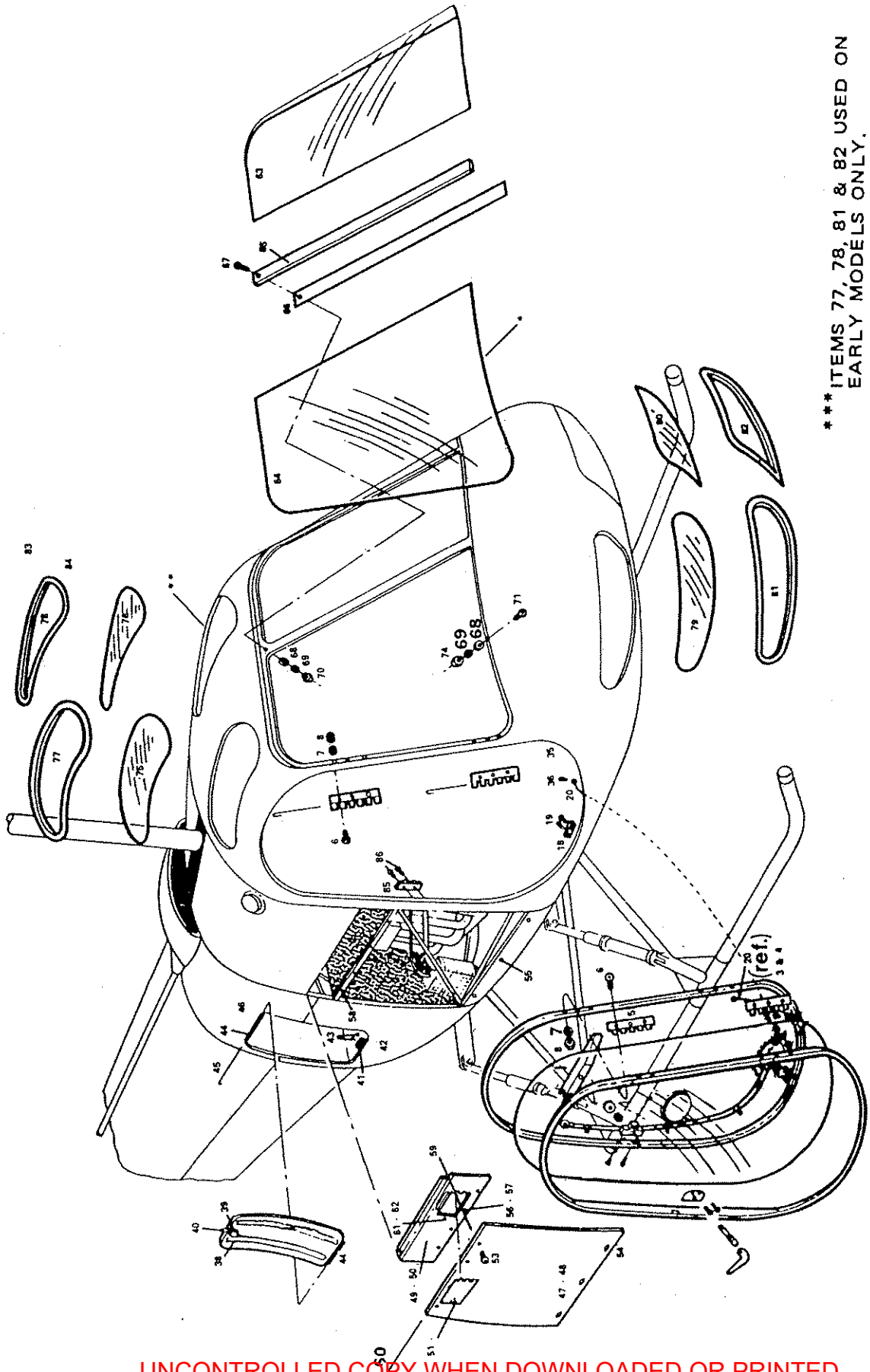

*** ITEMS 77, 78, 81 & 82 USED ON EARLY MODELS ONLY.

WINDOWS, DOORS AND COMPARTMENT ENCLOSURES
FIGURE 7-1

UNCONTROLLED COPY WHEN DOWNLOADED OR PRINTED

Visit www.enstromhelicopter.com for instructions to order an original manual and to register for email notification updates.

UNCONTROLLED COPY WHEN DOWNLOADED OR PRINTED

Visit www.enstromhelicopter.com for instructions to order an original manual and to register for email notification updates.

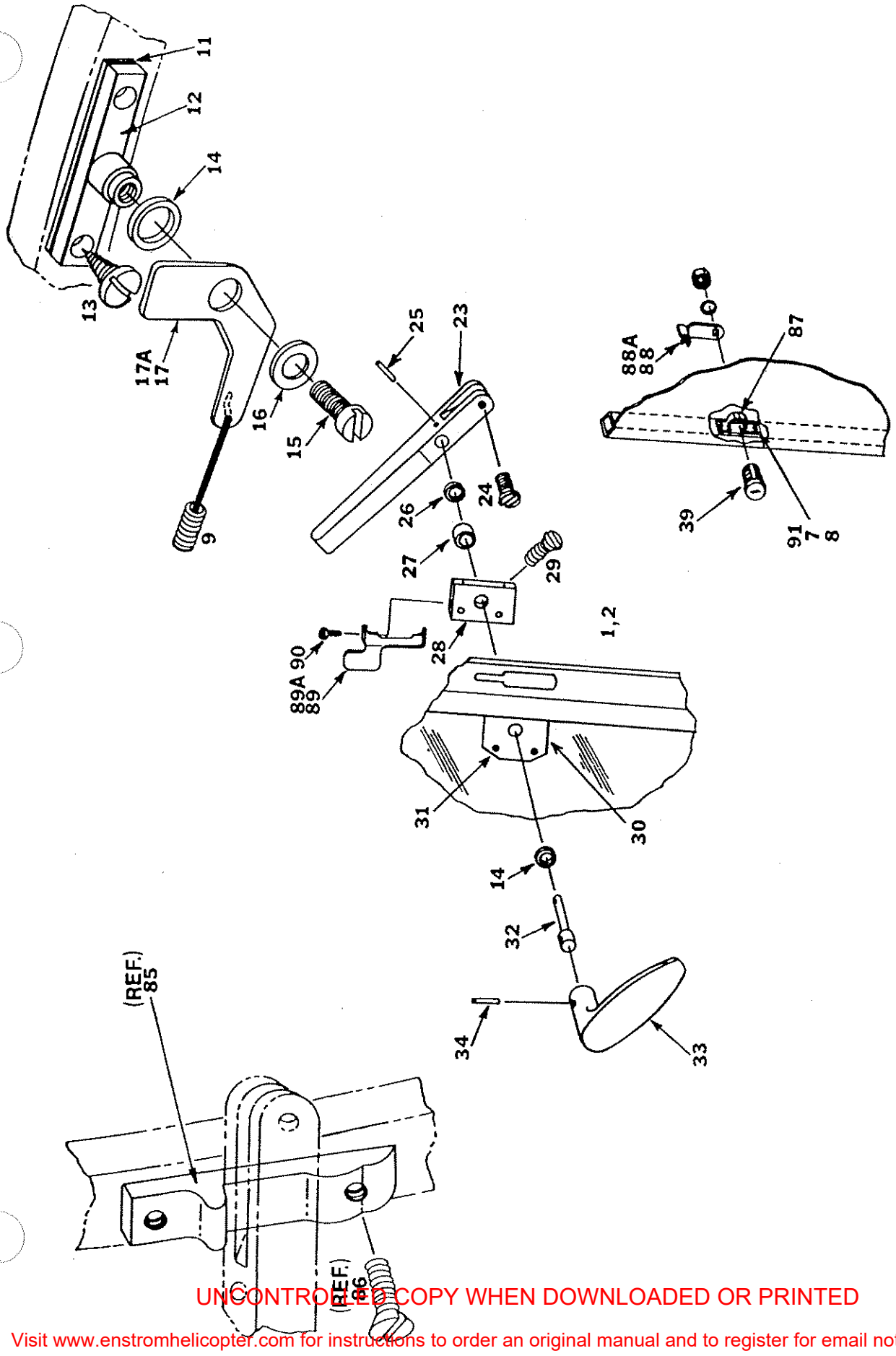

DOOR HARDWARE DETAILS
FIGURE 7-1A

UNCONTROLLED COPY WHEN DOWNLOADED OR PRINTED
Visit www.enstromhelicopter.com for instructions to order an original manual and to register for email notification updates.

UNCONTROLLED COPY WHEN DOWNLOADED OR PRINTED

Visit www.enstromhelicopter.com for instructions to order an original manual and to register for email notification updates.

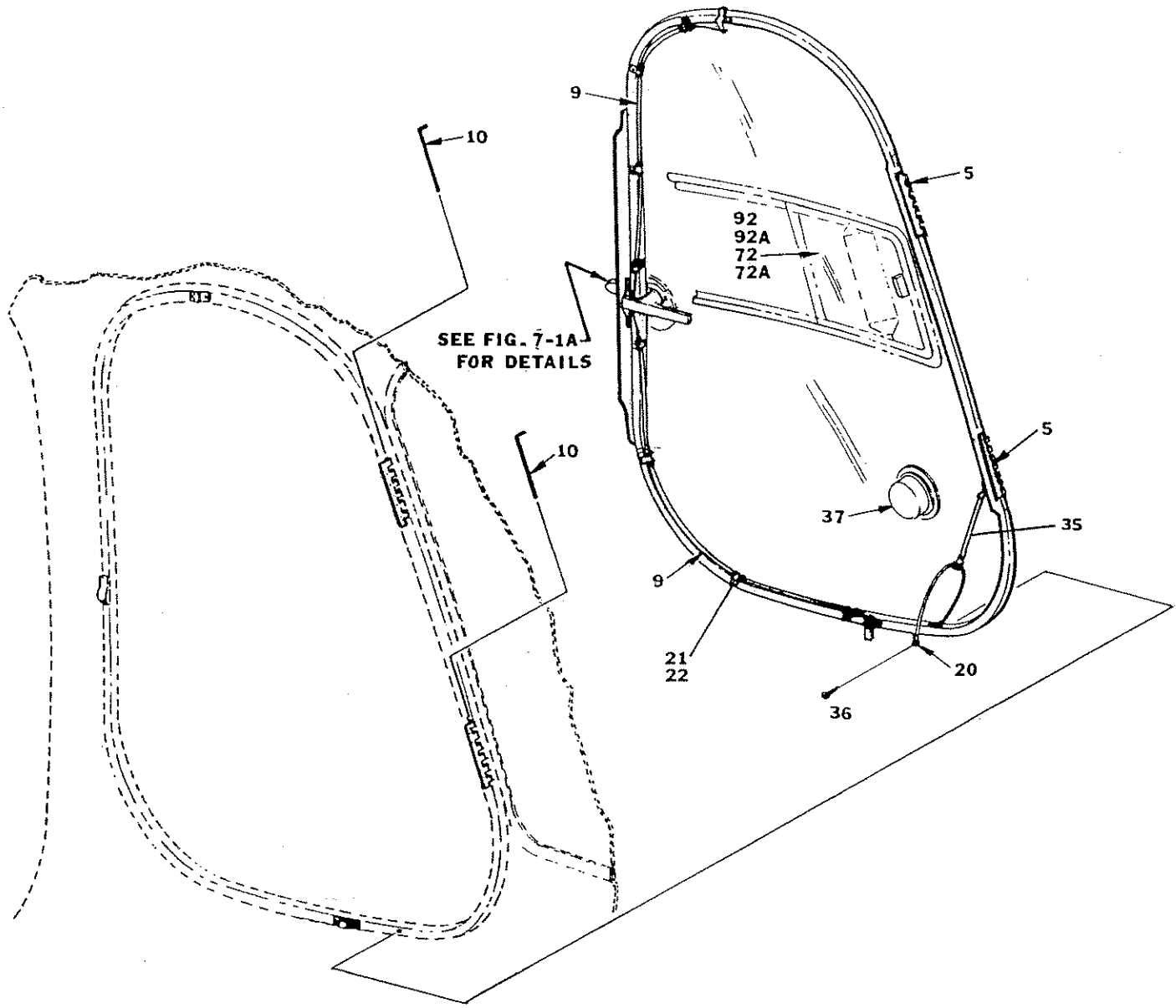

F-28F CABIN DOOR
FIGURE 7-1B

UNCONTROLLED COPY WHEN DOWNLOADED OR PRINTED

Visit www.enstromhelicopter.com for instructions to order an original manual and to register for email notification updates.

UNCONTROLLED COPY WHEN DOWNLOADED OR PRINTED

Visit www.enstromhelicopter.com for instructions to order an original manual and to register for email notification updates.

Figure 7-1, A & B

ITEM NUMBER	PART NUMBER	DESCRIPTION	QTY. PER ASSY.	MODELS AFFECTED								
				F28A	280	F28C	280C	F28F	280F	280FX		
		Door Assembly Cabin										
1	28-11310-1	Door Assy. R/H	1	X		X		X				
2	28-11310-2	Door Assy. L/H	1	X		X		X				
3	28-11310-7	Door Frame R/H	1	X		X		X				
4	28-11310-8	Door Frame L/H	1	X		X		X				
5	28-11310-11	Hinge Assembly	2	X		X		X				
6	AN509-8R18	Screw	12	X		X		X				
7	AN960-8L	Washer	16	X		X		X				
8	AN365-832A	Nut	16	X		X		X				
9	3A-3308	Door Latch Cable	4	X		X		X				
10	28-11310-905	Hinge Pin	4	X		X		X				
11	28-11440-4	Shims	AR	X		X		X				
12	28-11417-1	Bracket	2	X		X		X				
13	AN531-6R6	Truss Hd. Screw	4	X		X		X				
14	AN960-C516	Washer	2	X		X		X				
15	NK500-8-10	Screw	2	X		X		X				
16	AN960-8L	Washer	2	X		X		X				
17	28-11412-3	Latch	2	X		X		X				
17a	28-11412-4	Latch	2	X		X		X				
18	28-11435-1	Plate	2	X		X		X				
19	AN531-6R6	Phillip Hd. CT Sunk										
		Screw	4	X		X		X				
20	52305A15-6	Cable	1	X		X		X				
21	M21919-DG3	Clamps	8	X		X		X				
22	Truss Head	Screws 6 x 1/2"	8	X		X		X				
23	28-11427-1	Inside Handle	1	X		X		X				
24	AN526-8R8	Screw	1	X		X		X				
25	79-028-125-0687	Roll Pin	1	X		X		X				
*26	1/4 x 11/16 x											
	.050	Washer	2	X		X		X				
27	28-11376-1	Spacer	1	X		X		X				
28	28-11373-1	Bracket	1	X		X		X				
29	AN507C-832-12	Screw	2	X		X		X				

UNCONTROLLED COPY WHEN DOWNLOADED OR PRINTED

Visit www.enstromhelicopter.com for instructions to order an original manual and to register for email notification updates.

Figure 7-1, A & B (Cont.)

ITEM NUMBER	PART NUMBER	DESCRIPTION	QTY. PER ASSY.	MODELS AFFECTED								
				F28A	280	F28C	280C	F28F	280F	280FX		
30	28-11372-1	Latch Plate	1	X		X		X				
31	AN507C-632-8	Screw	2	X		X		X				
32	28-11428-1	Latch Rod	1	X		X		X				
33	AR134-D-TY2	Handle	1	X		X		X				
34	79-028-125-0500	Roll Pin	1	X		X		X				
35	28-11407-1	Bungee	1	X		X		X				
36	6 x 1/2	Truss Head Screw	2	X		X		X				
37	CC-3251	Snap Vent	2	X		X		X				
38	28-11408-2	Baggage Door Assembly	1	X		X						
39	15753XC2L	Style AR Lock Assy.	3	X		X						
40	28-11437-1	Striker Arm	1	X		X						
41	28-11438-1	Catch Plate	1	X		X						
*42	28-11408-10	Spacer	AR	X		X						
43	AN525-832R-7	Screw	2	X		X						
	AN960-8L	Washer	2	X		X						
	AN365-832	Nut	2	X		X						
44	MS20257-P4	Hinge	1	X		X						
45	MS20253-2	Pin	1	X		X						
46	AN525-832R6	Screw	5	X		X						
	AN960-8L	Washer	5	X		X						
	AN365-832	Nut	5	X		X						
47	28-11414-4	Engine Cowl RH Lower	1	X		X						
48	28-11414-3	Engine Cowl LH Lower	1	X		X						
49	28-11414-6	Engine Cowl RH Upper	1	X		X						
50	28-11414-5	Engine Cowl RH Upper	1	X		X						
51	28-11440-1	Access Door	2	X		X						
53	AN507-632-5	Screw	6	X		X						
	AN935-6	Lock Washer	6	X		X						
	AN340-6	Nut	6	X		X						
54	5-W-140	Fastener	6	X		X						
	85-46-101-39	Nylon Washer	6	X		X						
	85-34-101-17	Retainer Ring	6	X		X						
55	5-295	Lyon Receptacle	6	X		X						

UNCONTROLLED COPY WHEN DOWNLOADED OR PRINTED

Visit www.enstromhelicopter.com for instructions to order an original manual and to register for email notification updates.

Figure 7-1, A & B (Cont.)

ITEM NUMBER	PART NUMBER	DESCRIPTION	QTY. PER ASSY.	MODELS AFFECTED								
				F28A	280	F28C	280C	F28F	280F	280FX		
56	AJ4-35	DZUS Fasteners	12	X		X						
57	GA4-250	DZUS Sleeve	12	X		X						
58	S4-200	Spring	12	X		X						
59	MS20257-4	Hinge	2	X		X						
60	MS20253-2	Hinge Pin	2	X		X						
61	82-12-120-16	Fastener	2	X		X						
	43-13-1-24	Spring	2	X		X						
	82-32-101-20	Ring Retainer	2	X		X						
	82-46-101-39	Nylon Washer	2	X		X						
62	82-35-302-15	Retainer	2	X		X						
63	28-11309-3	Windshield LH	1	X		X						
64	28-11309-4	Windshield RH	1	X		X						
65	28-11309-6	Retainer Stop	1	X		X						
66	28-11309-7	Seal	1	X		X						
67	AN525-832-18	Screws	AR	X		X						
68	AN960-8L	Washer	AR	X		X						
69	AN9358L	Lock Washers	AR	X		X						
70	AN365-832A	Nut	AR	X		X						
71	AN507-832-R9	Screw	AR	X		X						
72	28-11710-1	LH Sliding Window	1	X		X		X				
	28-11708-1	Wing Window Assembly	1	X		X		X				
	28-11709-1	Sliding Window Assy.	1	X		X		X				
	28-11710-1	Track Assembly	1	X		X		X				
	28-11711-11	Pivot Block	2	X		X		X				
	28-11712-11	Handle	1	X		X		X				
	28-22165-1	Bushing	2	X		X		X				
	AN526C1032-9	Screw	2	X		X		X				
	AN364-1032A	Nut	4	X		X		X				
	AN960C 10L	Washer	6	X		X		X				
	AN42-B-14	Eye Bolt	2	X		X		X				
	AN526-6R8	Truss Hd. Screw	3	X		X		X				
	AN526-6R7	Screw	10	X		X						
	AN960-6L	Washer	6	X		X		X				

UNCONTROLLED COPY WHEN DOWNLOADED OR PRINTED
Visit www.enstromhelicopter.com for instructions to order an original manual and to register for email notification updates.

Figure 7-1, A & B (Cont.)

ITEM NUMBER	PART NUMBER	DESCRIPTION	QTY. PER ASSY.	MODELS AFFECTED								
				F28A	280	F28C	280C	F28F	280F	280FX		
	AN364-632A	Nut	4	X		X		X				
	AN530-6-8	Screw	2	X		X		X				
	28-113071-11	Window Fastener Instal.	1	X		X						
72a	28-11710-2	R.H. Sliding Window	1	X		X		X				
	28-11708-2	Wing Window Assy.	1	X		X		X				
	28-11709-2	Sliding Window Assy.	1	X		X		X				
	28-11710-2	Track Assembly	1	X		X		X				
	28-11711-12	Pivot Block	2	X		X		X				
	28-11712-11	Handle	1	X		X		X				
	28-22165-1	Bushing	2	X		X		X				
	AN526C1032-9	Screw	2	X		X		X				
	AN364-1032A	Nut	4	X		X		X				
	AN960C10L	Washer	6	X		X		X				
	AN42-B-14	Eye Bolt	2	X		X		X				
	AN526-6R8	Screw	3	X		X		X				
	AN526-6R7	Screw	10	X		X		X				
	AN960-6L	Washer	6	X		X		X				
	AN364-632A	Nut	4	X		X		X				
	AN530-6-8	Screw	2	X		X		X				
	28-113071-1	Window Fastener Instal.	1	X		X						
74	AN340-832	Nut	AR	X		X						
75	28-11425-4	RH Overhead Glass	1	X		X		X				
76	28-11425-3	LH Overhead Glass	1	X		X		X				
77	28-11425-8	RH Overhead Extrusion	1*	X		X						
78	28-11425-9	LH Overhead Extrusion	1*	X		X						
79	28-11425-6	RH Lower Glass	1	X		X		X				
80	28-11425-5	LH Lower Glass	1*	X		X		X				
81	28-11425-10	RH Lower Extrusion	1*	X		X						
82	28-11425-9	LH Lower Extrusion	1*	X		X						
83	CR-163-4-6	Rivets	AR	X		X						
84	AN960-4	Washer	AR	X		X						
85	28-11371-1	Latch	2	X		X		X				
86	AN507C-1032-12	Screw	4	X		X		X				

UNCONTROLLED COPY WHEN DOWNLOADED OR PRINTED
Visit www.enstromhelicopter.com for instructions to order an original manual and to register for email notification updates.

Figure 7-1, A & B (Cont.)

ITEM NUMBER	PART NUMBER	DESCRIPTION	QTY. PER ASSY.	MODELS AFFECTED								
				F28A	280	F28C	280C	F28F	280F	280FX		
87	28-11701-1	Lock Retainer	1	X		X		X				
88	28-11702-1	Latch Arm RH	1	X		X		X				
88a	28-11702-2	Latch Arm LH	1	X		X		X				
89	28-11703-1	Bracket-Lock RH	1	X		X		X				
89a	28-11703-2	Bracket-Lock LH	1	X		X		X				
90	NK500-8-5	Screw	4	X		X		X				
91	AN509-8R12	Screw	2	X		X		X				
92	28-11709-1	Sliding Window L.H.	1			X		X				
92a	28-11709-2	Sliding Window R.H.	1			X		X				

*NOTE: EC-801, Bonding or Silastic 732 RTV - Qty. AR
**NOTE: Silastic 732 RTV or Equivalent

UNCONTROLLED COPY WHEN DOWNLOADED OR PRINTED
Visit www.enstrombelicopter.com for instructions to order an original manual and to register for email notification updates.

UNCONTROLLED COPY WHEN DOWNLOADED OR PRINTED

Visit www.enstromhelicopter.com for instructions to order an original manual and to register for email notification updates.

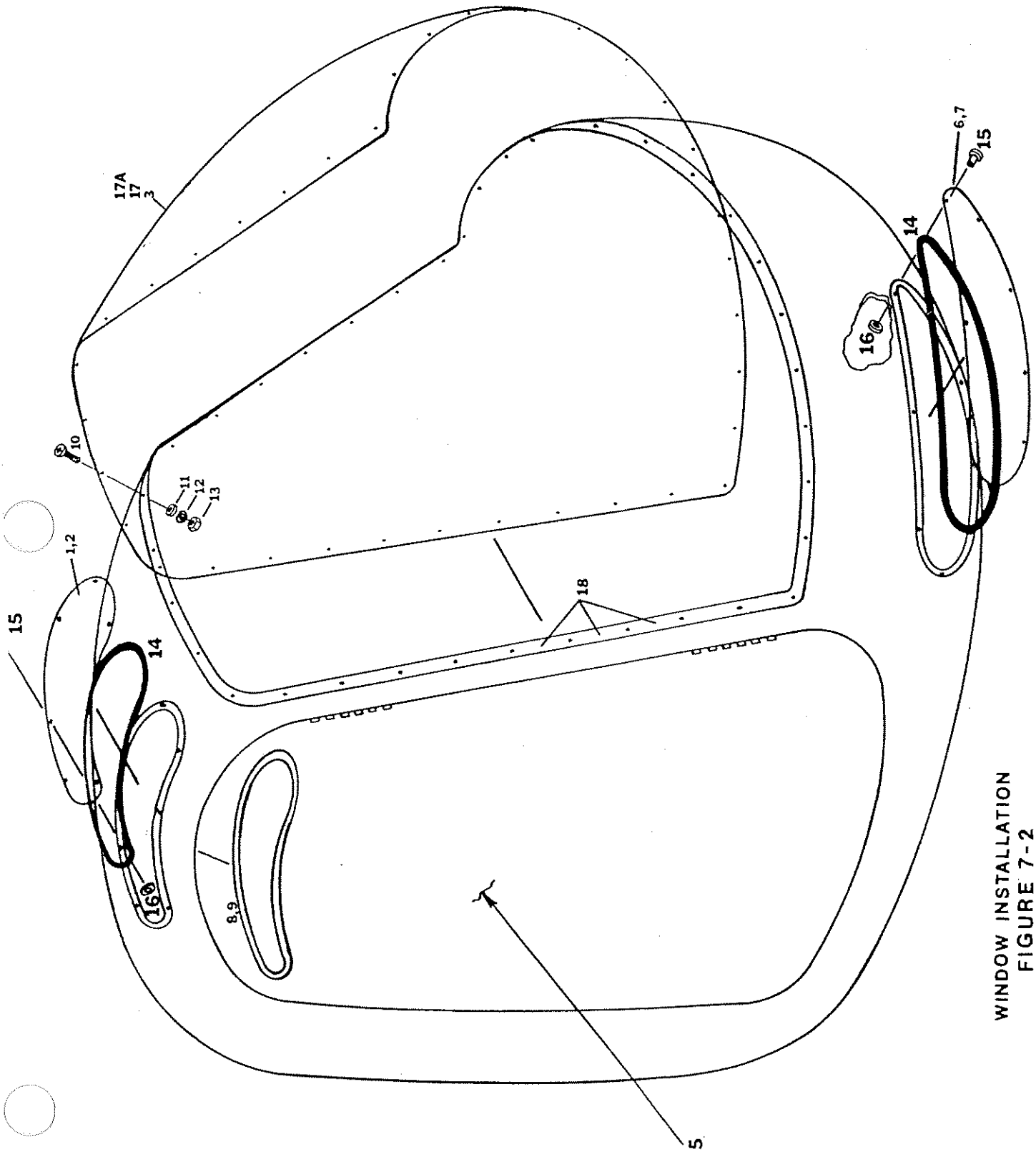

WINDOW INSTALLATION
FIGURE 7-2

UNCONTROLLED COPY WHEN DOWNLOADED OR PRINTED

Visit www.enstromhelicopter.com for instructions to order an original manual and to register for email notification updates.

UNCONTROLLED COPY WHEN DOWNLOADED OR PRINTED

Visit www.enstromhelicopter.com for instructions to order an original manual and to register for email notification updates.

Figure 7-2

ITEM NUMBER	PART NUMBER	DESCRIPTION	QTY. PER ASSY.	MODELS AFFECTED								
				F28A	280	F28C	280C	F28F	280F	280FX		
1	28-11425-4	R.H. Overhead Glass	1	X		X		X				
2	28-11425-3	L.H. Overhead Glass	1	X		X		X				
3	28-113052-2	Windshield (F-28C2)	1			X		X				
4	28-11310-103	R.H. Door Assembly	1	X		X		X				
5	28-11310-104	L.H. Door Assembly	1	X		X		X				
6	28-11425-6	R.H. Lower Glass	1	X		X		X				
7	28-11425-5	L.H. Lower Glass	1	X		X		X				
8	28-11607-11	L.H. Trim Cap	1			X		X				
9	28-11607-12	R.H. Trim Cap	1			X		X				
10	AN507-832R7	Screw	36			X		X				
11	AN960-8L	Washer	36			X		X				
12	AN935-8L	Lock Washer	36			X		X				
13	AN340-832	Nut	36			X		X				
14	#4016	Foam Tape	AR			X		X				
15	CR91484-4-4	Rivet	AR			X		X				
16	AN960-4L	Washer	AR			X		X				
17	28-11309-3	Windshield LH	1	X		X						
17a	28-11309-4	Windshield RH	1	X		X						
18	EC-801-807	Adhesive	AR	X		X		X				

UNCONTROLLED COPY WHEN DOWNLOADED OR PRINTED
Visit www.enstrombelicopter.com for instructions to order an original manual and to register for email notification updates.

UNCONTROLLED COPY WHEN DOWNLOADED OR PRINTED

Visit www.enstromhelicopter.com for instructions to order an original manual and to register for email notification updates.

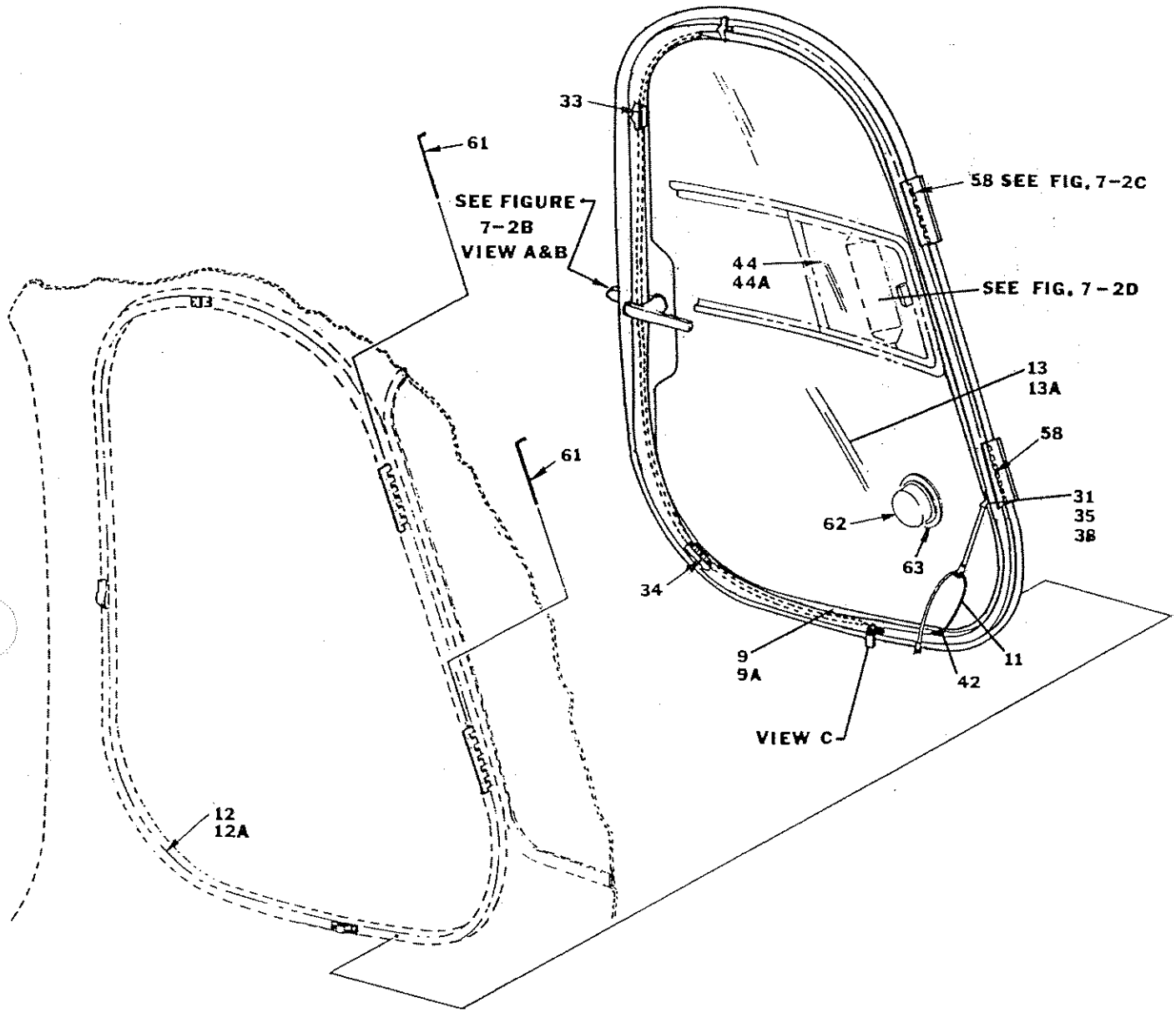

F-28F CABIN DOOR **ASSEMBLY**

FIGURE 7-2A

UNCONTROLLED COPY WHEN DOWNLOADED OR PRINTED

Visit www.enstromhelicopter.com for instructions to order an original manual and to register for email notification updates.

UNCONTROLLED COPY WHEN DOWNLOADED OR PRINTED

Visit www.enstromhelicopter.com for instructions to order an original manual and to register for email notification updates.

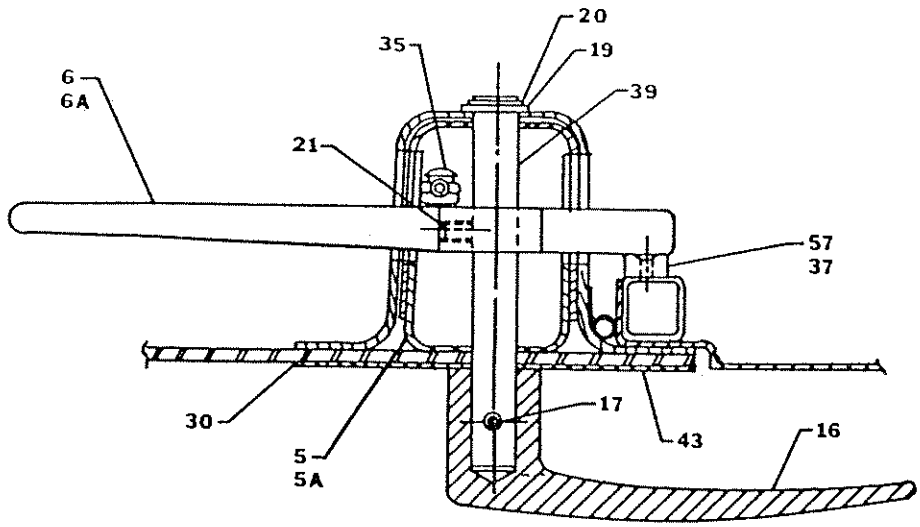

This Installation on S/N 744 Only

VIEW A

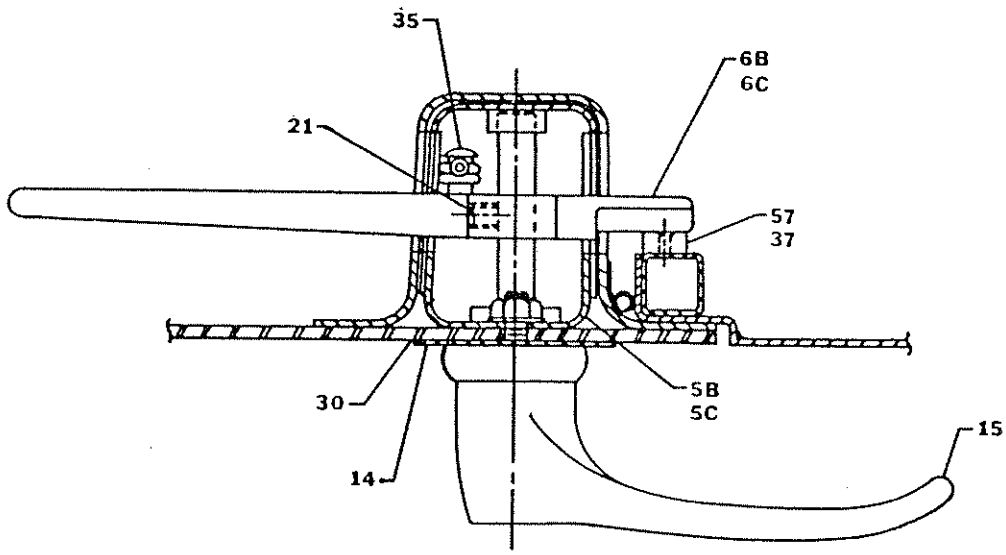

This Installation on all
A/C After S/N 745

VIEW B

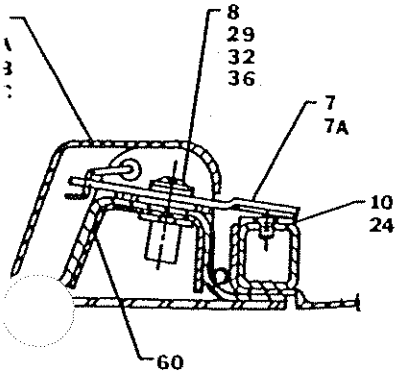

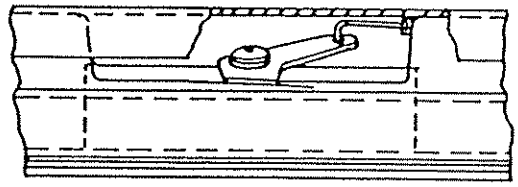

VIEW C

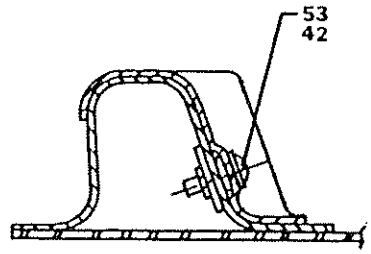

UNCONTROLLED COPY WHEN DOWNLOADED OR PRINTED

Visit www.enstromhelicopter.com for instructions to order an original manual and to register for email notification updates.

SECTIONS THROUGH DOOR LATCHES & LUGS

UNCONTROLLED COPY WHEN DOWNLOADED OR PRINTED

Visit www.enstromhelicopter.com for instructions to order an original manual and to register for email notification updates.

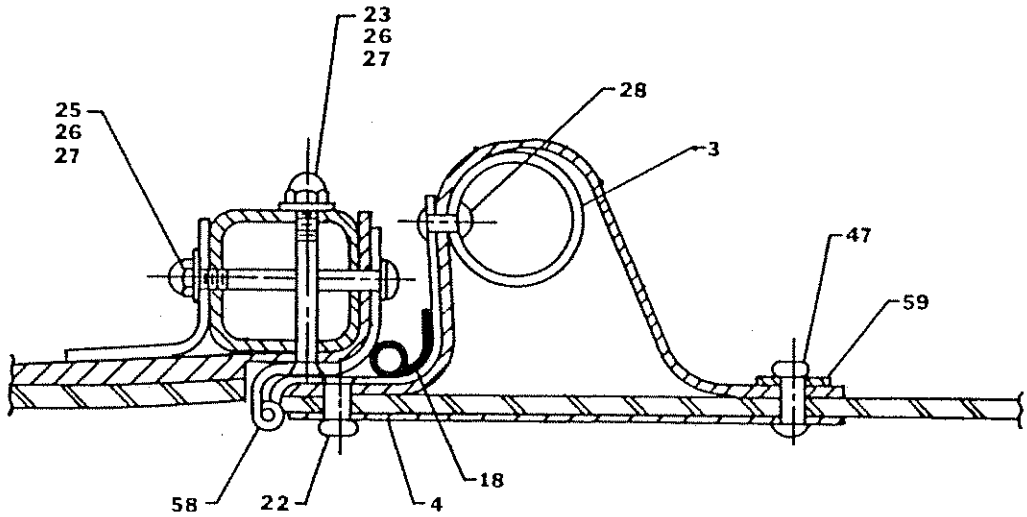

SECTION THROUGH DOOR HINGE ASSEMBLY
FIGURE 7-2C

UNCONTROLLED COPY WHEN DOWNLOADED OR PRINTED
Visit www.enstromhelicopter.com for instructions to order an original manual and to register for email notification updates.

UNCONTROLLED COPY WHEN DOWNLOADED OR PRINTED

Visit www.enstromhelicopter.com for instructions to order an original manual and to register for email notification updates.

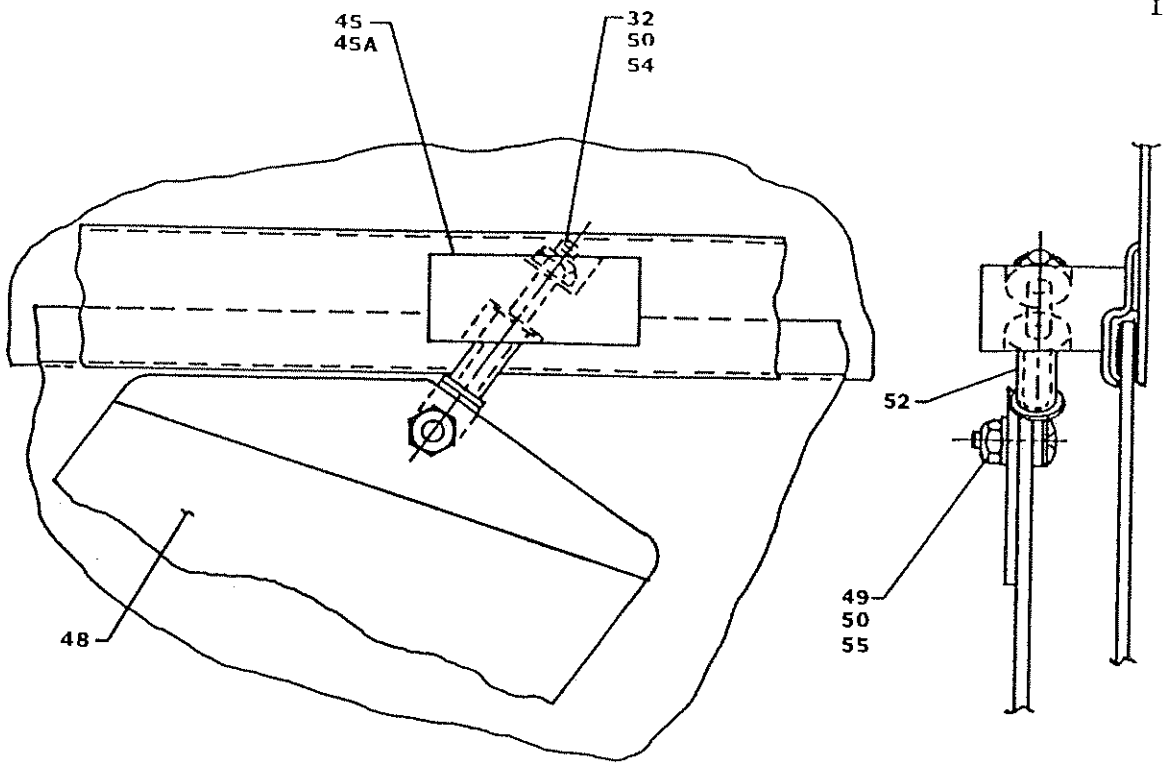

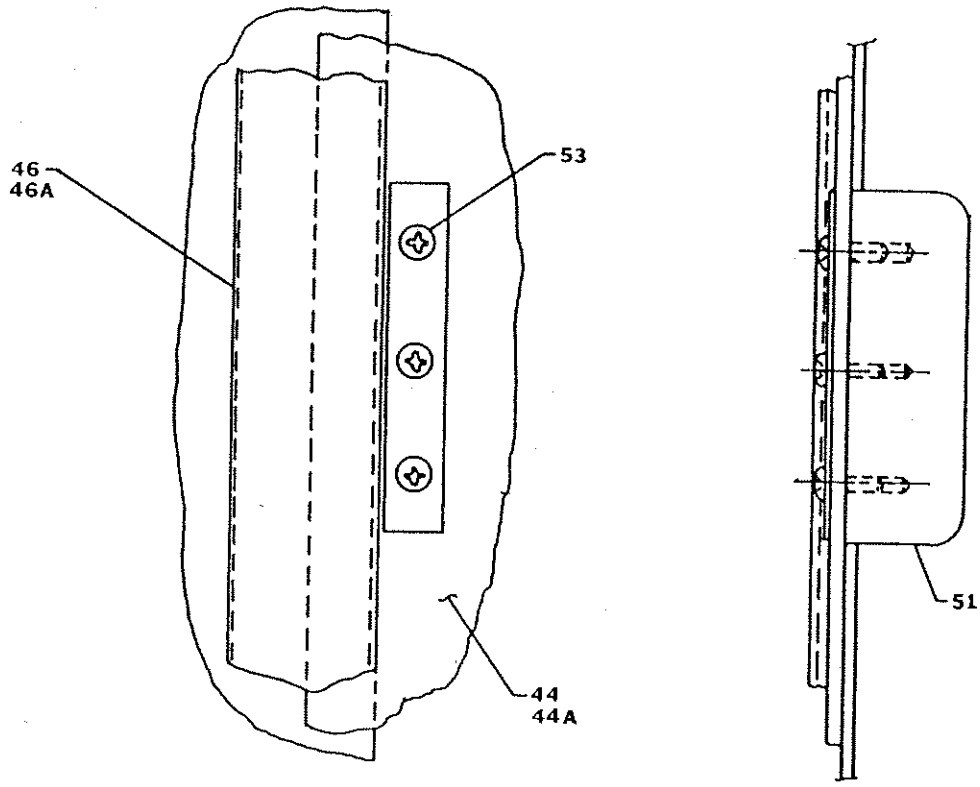

SECTION DETAILS ON VENT WINDOWS
FIGURE 7-2D

UNCONTROLLED COPY WHEN DOWNLOADED OR PRINTED
Visit www.enstromhelicopter.com for instructions to order an original manual and to register for email notification updates.

UNCONTROLLED COPY WHEN DOWNLOADED OR PRINTED

Visit www.enstromhelicopter.com for instructions to order an original manual and to register for email notification updates.

ILLUSTRATED PARTS CATALOG

Figure 7-2A, B, C & D
A/C S/N 744

ITEM NUMBER	PART NUMBER	DESCRIPTION	QTY. PER ASSY.	MODELS AFFECTED								
				F28A	280	F28C	280C	F28F	280F	280FX		
1	28-113090-1	L.H. Door Assembly	1					X				
2	28-113090-2	R.H. Door Assembly	1					X				
3	28-113077-11	Doubler - Door	1					X				
4	28-113078-11	Doubler - Hinge	2					X				
5	28-113079-11	Doubler L.H. - Latch	1					X				
5a	28-113079-12	Doubler R.H. - Latch	1					X				
6	28-113080-1	Latch Arm	1					X				
6a	28-113080-2	Latch Arm	1					X				
7	28-113085-11	Latch - L.H. - Door	1					X				
7a	28-113085-12	Latch - R.H. - Door	1					X				
8	28-113084-11	Sleeve - Latch	2					X				
9	28-113090-11	Cover	1					X				
9a	28-113090-12	Cover	1					X				
9b	28-113090-13	Cover	1					X				
9c	28-113090-14	Cover	1					X				
10	28-11435-1	Plate	2					X				
11	28-11407-5	Bungee Cord	1					X				
12	28-113090-15	Frame L.H.	1					X				
12a	28-113090-16	Frame R.H.	1					X				
13	28-11310-5	Plexiglas R.H.	1					X				
13a	28-11310-6	Plexiglas L.H.	1					X				
16	AR134-D-TY2	Handle	1					X				
17	79-028-125-0687	Roll Pin	1					X				
18	ZX-10204	Seal	AR					X				
19	AN960-616L	Washer	1					X				
20	5100-37	Snap Ring	1					X				
21	MS18063-19	Set Screw	1					X				
22	CR3212-4-4	Rivet	8					X				
23	AN509-8R16	Screw	4					X				
24	AN531-6R6	Screw	4					X				
25	AN525-8R16	Screw	2					X				
26	AN960-8L	Washer	6					X				
27	22NKM-82	Acorn Nut	6					X				

UNCONTROLLED COPY WHEN DOWNLOADED OR PRINTED
Visit www.enstromhelicopter.com for instructions to order an original manual and to register for email notification updates.

ILLUSTRATED PARTS CATALOG

Figure 7-2A, B, C & D (Cont.)
A/C S/N 744

ITEM NUMBER	PART NUMBER	DESCRIPTION	QTY. PER ASSY.	MODELS AFFECTED								
				F28A	280	F28C	280C	F28F	280F	280FX		
28	CR3213-4-2	Rivet	8					X				
29	NK525-10-R10	Screw	2					X				
30	Y9485	Adhesive Tape	AR					X				
31	AN365-832A	Nut	1					X				
32	AN960-10	Washer	6					X				
33	3A-3308	Cable (Short)	1					X				
34	3A-3308	Cable (Long)	1					X				
35	AN526-832R8	Screw	1					X				
36	S10P-175	Plus Nut	2					X				
37	AN531-6R8	Screw	5					X				
38	AN509-8R10	Screw	1					X				
39	28-113081-11	Latch Rod	1					X				
42	S6P-270	Plus Nut	4					X				
43	28-113082-11	Doubler	1					X				
44	28-11709-3	Slide Window Assy. L.H.	1					X				
44a	28-11709-4	Slide Window Assy. R.H.	1					X				
45	28-11711-11	Pivot Block	1					X				
45a	28-11711-12	Pivot Block	1					X				
46	28-11710-1	Track Assembly	1					X				
46a	28-11710-2	Track Assembly	1					X				
47	CR3213-4-4	Rivet	7					X				
48	28-11708-1	Wing Window	1					X				
49	AN526C1032-9	Screw	2					X				
50	AN364-1032A	Nut	4					X				
51	28-11712-11	Handle	1					X				
52	28-22165-1	Bushing	2					X				
53	AN526-6R8	Screw	7					X				
54	AN42B-14	Eye Bolt	2					X				
55	AN960-10	Washer	3					X				
57	28-11371-1	Lock Plate	1					X				
58	28-113076-1	Hinge - Door	2					X				
59	28-113087-11	Doubler	2					X				
60	28-113088-11	Doubler	2					X				

UNCONTROLLED COPY WHEN DOWNLOADED OR PRINTED
Visit www.enstromhelicopter.com for instructions to order an original manual and to register for email notification updates.

ILLUSTRATED PARTS CATALOG

Figure 7-2A, B, C & D (Cont.)
A/C S/N 744

ITEM NUMBER	PART NUMBER	DESCRIPTION	QTY. PER ASSY.	MODELS AFFECTED								
				F28A	280	F28C	280C	F28F	280F	280FX		
61	28-113076-902	Pin-Hinge	2					X				
62	CC-3251	Snap Vent	1					X				
63	28-11310-10	Ring	1					X				

UNCONTROLLED COPY WHEN DOWNLOADED OR PRINTED

Visit www.enstromhelicopter.com for instructions to order an original manual and to register for email notification updates.

ILLUSTRATED PARTS CATALOG

Figure 7-2A, B, C & D (Cont.)
A/C S/N 745 & Subsequent

ITEM NUMBER	PART NUMBER	DESCRIPTION	QTY. PER ASSY.	MODELS AFFECTED								
				F28A	280	F28C	280C	F28F	280F	280FX		
1a	28-113090-3	L.H. Door Assembly	1					X				
2a	28-113090-4	R.H. Door Assembly	1					X				
3	28-113077-11	Doubler - Door	1					X				
4	28-113078-11	Doubler - Hinge	2					X				
5b	28-113079-13	Doubler L.H. - Latch	1					X				
5c	28-113079-14	Doubler R.H. - Latch	1					X				
6b	28-113080-3	Latch Arm	1					X				
6c	28-113080-4	Latch Arm	1					X				
7b	28-113085-13	Latch	1					X				
7c	28-113085-14	Latch	1					X				
8	28-113084-11	Sleeve - Latch	2					X				
9	28-113090-11	Cover	1					X				
9a	28-113090-12	Cover	1					X				
9b	28-113090-13	Cover	1					X				
9c	28-113090-14	Cover	1					X				
10	28-11435-1	Plate	2					X				
11	28-11407-5	Bungee Cord	1					X				
12	28-113090-15	Frame L.H.	1					X				
12a	28-113090-16	Frame R.H.	1					X				
13	28-11310-5	Plexiglas R.H.	1					X				
13a	28-11310-6	Plexiglas L.H.	1					X				
14	28-113092-11	Doubler	1					X				
15	28-113091-1	Handle	1					X				
18	ZX-10204	Seal	AR					X				
21	MS18063-19	Set Screw	1					X				
22	CR3212-4-4	Rivet	8					X				
23	AN509-8R16	Screw	4					X				
24	AN531-6R6	Screw	4					X				
25	AN525-8R16	Screw	2					X				
26	AN960-8L	Washer	6					X				
27	22NKM-82	Acorn Nut	6					X				
28	CR3213-4-2	Rivet	8					X				
29	NK525-10R10	Screw	2					X				

UNCONTROLLED COPY WHEN DOWNLOADED OR PRINTED
Visit www.enstromhelicopter.com for instructions to order an original manual and to register for email notification updates.

ILLUSTRATED PARTS CATALOG

Figure 7-2A, B, C & D (Cont.)
A/C S/N 745 & Subsequent

ITEM NUMBER	PART NUMBER	DESCRIPTION	QTY. PER ASSY.	MODELS AFFECTED								
				F28A	280	F28C	280C	F28F	280F	280FX		
30	Y9485	Adhesive Tape	AR					X				
31	AN365-832A	Nut	1					X				
32	AN960-10L	Washer	6					X				
33	3A-3308	Cable (Short)	1					X				
34	3A-3308	Cable (Long)	1					X				
35	AN526-832R8	Screw	1					X				
36	S10P-175	Plus Nut	2					X				
37	AN531-6R8	Screw	5					X				
38	AN509-8R10	Screw	1					X				
42	S6P-270	Plus Nut	4					X				
44	28-11709-3	Slide Window Assy. L.H.	1					X				
44a	28-11709-4	Slide Window Assy. R.H.	1					X				
45	28-11711-11	Pivot Block	1					X				
45a	28-11711-12	Pivot Block	1					X				
46	28-11710-1	Track Assembly	1					X				
46a	28-11710-2	Track Assembly	1					X				
47	CR3213-4-A	Rivet	7					X				
48	28-11708-1	Wing Window	1					X				
49	AN526C1032-9	Screw	2					X				
50	AN364-1032A	Nut	4					X				
51	28-11712-11	Handle	1					X				
52	28-22165-1	Bushing	2					X				
53	AN526-6R8	Screw	7					X				
54	AN42B-14	Eye Bolt	2					X				
55	AN960-10	Washer	3					X				
57	28-11371-1	Lock Plate	1					X				
58	28-113076-1	Hinge - Door	2					X				
59	28-113087-11	Doubler	2					X				
60	28-113088-11	Doubler	2					X				
61	28-113076-902	Pin - Hinge	2					X				
62	CC-3251	Snap Vent	1					X				
63	28-11310-10	Ring	1					X				

UNCONTROLLED COPY WHEN DOWNLOADED OR PRINTED
Visit www.enstromhelicopter.com for instructions to order an original manual and to register for email notification updates.

UNCONTROLLED COPY WHEN DOWNLOADED OR PRINTED

Visit www.enstromhelicopter.com for instructions to order an original manual and to register for email notification updates.

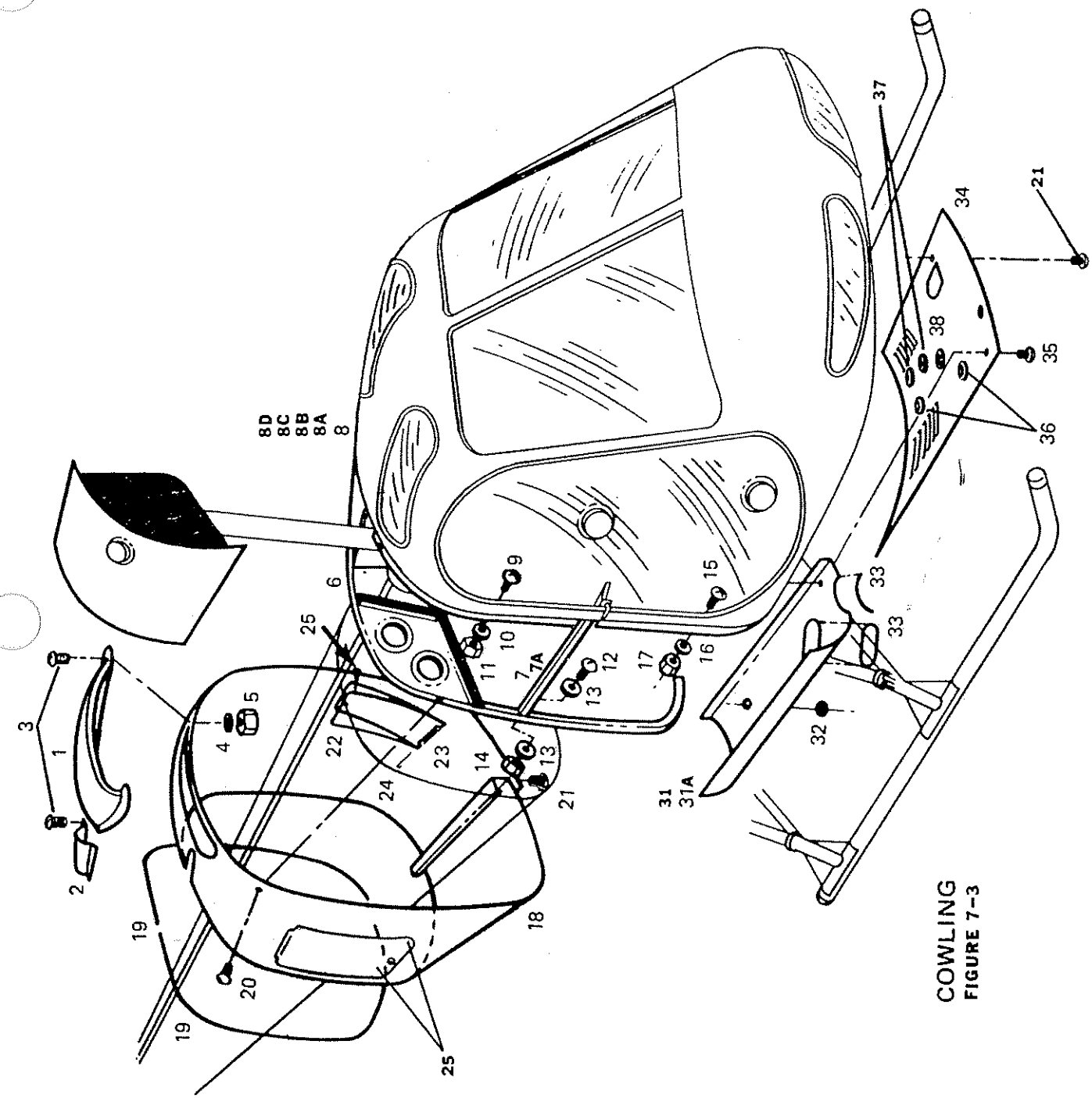

COWLING
FIGURE 7-3

UNCONTROLLED COPY WHEN DOWNLOADED OR PRINTED

Visit www.enstromhelicopter.com for instructions to order an original manual and to register for email notification updates.

UNCONTROLLED COPY WHEN DOWNLOADED OR PRINTED

Visit www.enstromhelicopter.com for instructions to order an original manual and to register for email notification updates.

Figure 7-3

ITEM NUMBER	PART NUMBER	DESCRIPTION	QTY. PER ASSY.	MODELS AFFECTED								
				F28A	280	F28C	280C	F28F	280F	280FX		
1	28-11401-3	Air Scoop*	1	X		X	X	X	X			
2	28-11402-1	Shaft Fairing - T.R.	1	X	X	X	X	X	X			
3	AN526-832R8	Screw	24	X	X	X	X	X	X			
4	AN960-8L	Washer	24	X	X	X	X	X	X			
5	AN365-832A	Nut	24	X	X	X	X	X	X			
6	28-11420-1	Ring Assy. - Cowl	1	X		X						
7	28-11413-3	Support L.H.	1	X		X						
7a	28-11413-4	Support R.H.	1	X		X						
8	28-11413-9	Mount - Tank	1	X		X						
8a	28-11413-10	Mount - Tank	1	X		X						
8b	28-11413-11	Mount - Cowl	1	X		X						
8c	28-11413-12	Mount - Cowl	1	X		X						
8e	28-11413-13	Mount - Cowl	1	X		X						
9	AN525-832R6	Screw	28	X		X						
10	AN960-8	Washer	28	X		X						
11	AN365-832A	Nut	28	X		X						
12	AN525-832R6	Screw	4	X		X						
13	AN960-8	Washer	8	X		X						
14	AN365-832A	Nut	4	X		X						
15	AN536-632R6	Screw	40	X		X						
16	AN960-6L	Washer	40	X		X						
17	AN365-632A	Nut	40	X		X						
18	28-11403-1	Wraparound Cowl	1	X		X						
19	980-003	Channel (x397)	AR	X		X						
20	AN526-832-8	Screw	12	X		X						
21	#8 x 1/2	Truss Hd. Screw Type B	21	X		X						
22	28-11442-1	Door - Inspection	1	X		X						
23	MS-20257-1	Hinge - Piano	1	X		X						
24	MS-20253-1	Pin - Hinge	1	X		X						
25	82-12-120-16	Stud - Wing	4	X		X						
	43-13-1-24	Spring - Ejector	4	X		X						
	82-32-101-20	Retainer - Split Ring	4	X		X						
	82-46-101-39	Washer - Wear	4	X		X						

*Late Model 280C

UNCONTROLLED COPY WHEN DOWNLOADED OR PRINTED
Visit www.enstromhelicopter.com for instructions to order an original manual and to register for email notification updates.

Figure 7-3 (Cont.)

ITEM NUMBER	PART NUMBER	DESCRIPTION	QTY. PER ASSY.	MODELS AFFECTED								
				F28A	280	F28C	280C	F28F	280F	280FX		
31	28-11405-1	Side Cowl - L.H. Bottom	1	X		X						
31a	28-11405-2	Side Cowl - R.H. Bottom	1	X		X						
32	AN931-12-17	Grommet	1	X		X						
33	980-001	Channel (X-142)	AR	X		X						
34	28-11409-1	Cowl Panel - Bottom	1	X		X						
35	AN525-8R8	Screw	7	X		X						
36	AN931-12-17	Grommet	4	X		X						
37	AN931-10-14	Grommet	2	X		X						
38	AN931-8-13	Grommet	3	X		X						

UNCONTROLLED COPY WHEN DOWNLOADED OR PRINTED

Visit www.enstromhelicopter.com for instructions to order an original manual and to register for email notification updates.

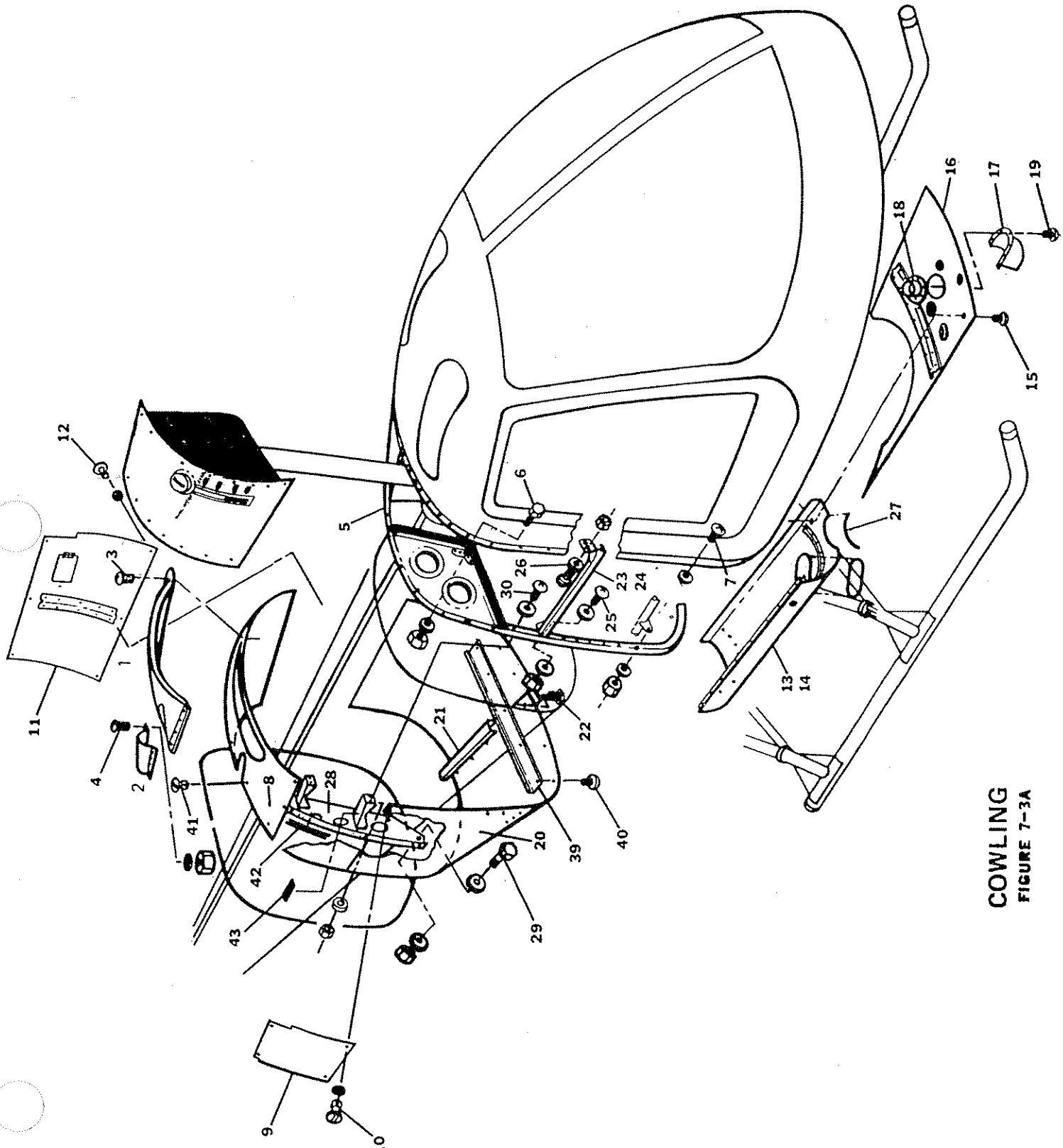

COWLING
FIGURE 7-3A

UNCONTROLLED COPY WHEN DOWNLOADED OR PRINTED

Visit www.enstromhelicopter.com for instructions to order an original manual and to register for email notification updates.

UNCONTROLLED COPY WHEN DOWNLOADED OR PRINTED

Visit www.enstromhelicopter.com for instructions to order an original manual and to register for email notification updates.

Figure 7-3A

ITEM NUMBER	PART NUMBER	DESCRIPTION	QTY. PER ASSY.	MODELS AFFECTED								
				F28A	280	F28C	280C	F28F	280F	280FX		
1	280-114509-1	Air Scoop*	1		X		X					
2	28-11402-1	Shaft Fairing - T.R.	1		X		X					
3	MS20470AD3-3	Rivet	AR		X		X					
4	AN526-632R6	Screw	5		X		X					
	AN365-632A	Nut	5		X		X					
	AN960-6L	Washer	5		X		X					
5	28-11460-3	Aft Cowl Ring/F28C2	1		X	X	X	X	X	X		
6	AN3-5A	Bolt	2	X	X	X	X	X	X	X		
	AN960-10L	Washer	2	X	X	X	X	X	X	X		
	AN365-1032A	Nut	2	X	X	X	X	X	X	X		
7	AN520-10-9	Screw	2	X	X	X	X	X	X	X		
	AN960-10	Washer	AR	X	X	X	X	X	X	X		
	AN960-10L	Washer	AR	X	X	X	X	X	X	X		
	AN364-1032A	Nut	2		X		X					
8	280-114501-1	Upper Cowling	1		X		X					
9	280-114504-1	Step Cover	1		X		X					
10	AJ4-30	Stud	4		X		X					
	GA4-250	Grommet	4		X		X					
11	280-114502-5	Side Cowl Assembly	1		X		X					
12	AJ4-30	Stud	6		X		X					
	GA4-250	Grommet	6		X		X					
13	280-114503-3	Lower Quarter Panel L.H.	1		X		X					
14	280-114503-4	Lower Quarter Panel R.H.	1		X		X					
15	AN530-8R8	Screw	AR		X		X					
16	280-114503-1	Lower Center Cowl	1		X		X					
17	28-12706-1	Hot Air Deflector	1		X		X					
18	28-12305-1	Stub	1		X		X					
19	MS20470AD4-4	Rivet	AR		X		X					
20	280-114503-6	Aft Cowl Assembly R.H.	1		X		X					
21	280-114503-5	Aft Cowl Assembly L.H.	1		X		X					
22	AN530-8R8	Screw	AR		X		X					
23	280-114500-18	Channel R.H.	1		X		X					
24	280-114500-17	Channel L.H.	1		X		X					

*Early Model 280C

UNCONTROLLED COPY WHEN DOWNLOADED OR PRINTED
Visit www.enstromhelicopter.com for instructions to order an original manual and to register for email notification updates.

Figure 7-3A (Cont.)

ITEM NUMBER	PART NUMBER	DESCRIPTION	QTY. PER ASSY.	MODELS AFFECTED								
				F28A	280	F28C	280C	F28F	280F	280FX		
25	AN5158R8	Screw	4		X	X	X	X	X	X		
	AN960-8L	Washer	4		X	X	X	X	X	X		
	AN365-832A	Nut	4		X	X	X	X	X	X		
26	AN525-1032-8	(Outboard) Screw	2		X	X	X	X	X	X		
	AN960PD10	(Outboard) Washer	2		X	X	X	X	X	X		
	AN365-1032A	(Outboard) Nut	2		X	X	X	X	X	X		
	AN525-8R7	(Inboard) Bolt	2		X	X	X	X	X	X		
	AN960-8L	(Inboard) Washer	2		X	X	X	X	X	X		
	AN365-832A	(Inboard) Nut	2		X	X	X	X	X	X		
27	980-001	Channel (x142)	AR		X	X	X	X	X	X		
28	280-114505-2	Step Assembly**	1		X	X	X	X	X	X		
29	AN3-4A	Bolt	2		X	X	X	X	X	X		
	AN960-10L	Washer	4		X	X	X	X	X	X		
	AN364-W33A	Nut	2		X	X	X	X	X	X		
30	AN515-8R8	Screw	10		X	X	X	X	X	X		
	AN960-8L	Washer	20		X	X	X	X	X	X		
	AN365-832A	Nut	10		X	X	X	X	X	X		
39	280-114508-11	Aft Cowl Support**	1		X	X	X	X	X	X		
40	AN530-8R8	Screw	5		X	X	X	X	X	X		
41	82-11-120-16	Stud	4		X	X	X	X	X	X		
42	#4316	1/16" Thk. x 3/4" Wide										
		Tape	AR		X	X	X	X	X	X		
43	28-17006-13	Non-Slip Surface/Tape	2		X	X	X	X	X	X		

**Later Model F28C-2

UNCONTROLLED COPY WHEN DOWNLOADED OR PRINTED

Visit www.ensignhelicopter.com for instructions to order an original manual and to register for email notification updates.

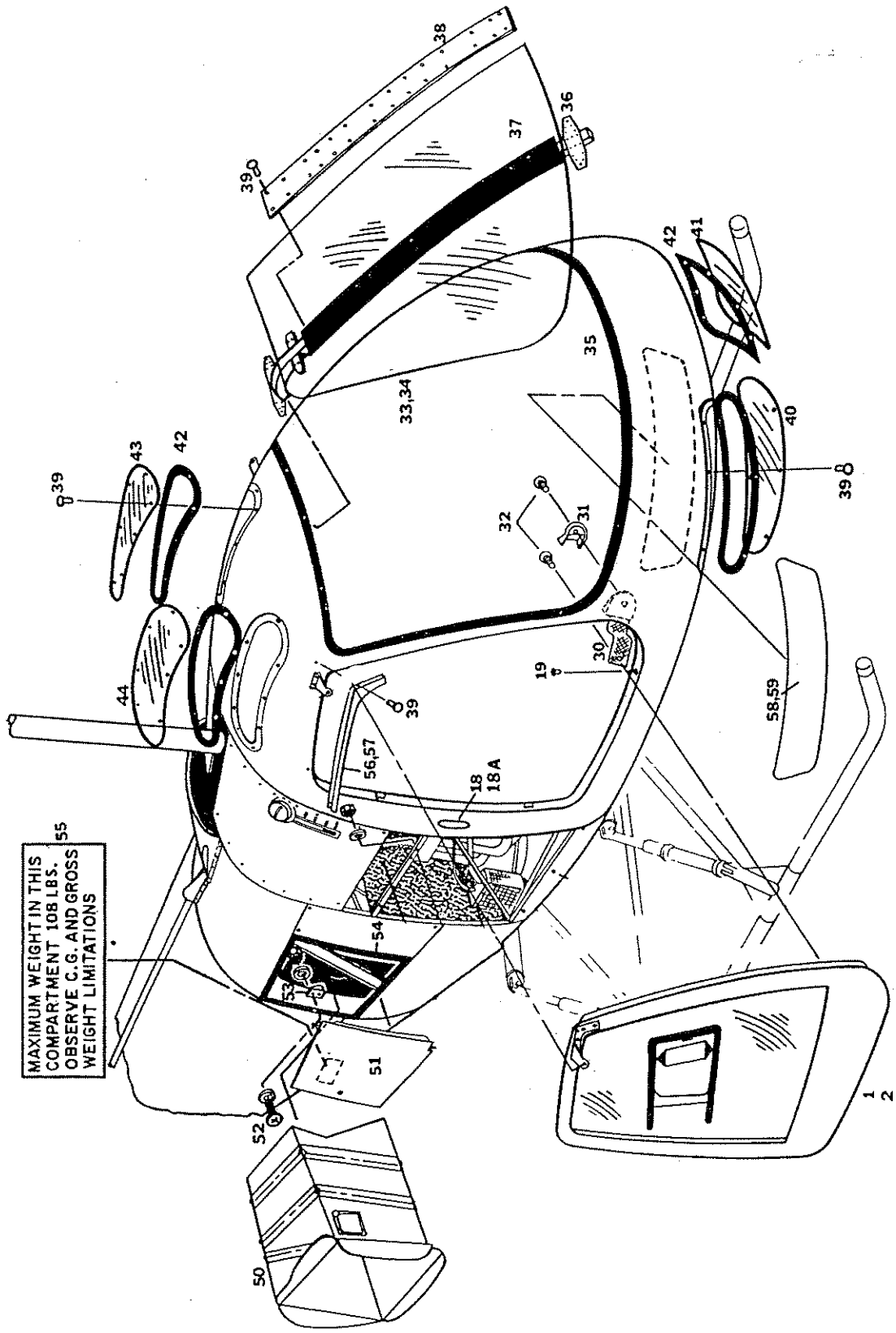

WINDOWS, DOORS AND COMPARTMENT ENCLOSURE

FIGURE 7-4

UNCONTROLLED COPY WHEN DOWNLOADED OR PRINTED

Visit www.enstromhelicopter.com for instructions to order an original manual and to register for email notification updates.

UNCONTROLLED COPY WHEN DOWNLOADED OR PRINTED

Visit www.enstromhelicopter.com for instructions to order an original manual and to register for email notification updates.

Figure 7-4

ITEM NUMBER	PART NUMBER	DESCRIPTION	QTY. PER ASSY.	MODELS AFFECTED								
				F28A	280	F28C	280C	F28F	280F	280FX		
18	280-117000-1	Door Lock Assembly L.H.	1		X		X		X	X		
18a	280-117000-2	Door Lock Assembly R.H.	1		X		X		X	X		
19	3-1AF	Bushing	1		X		X		X	X		
33	280-113022-12	Windshield R.H.	1		X		X		X	X		
34	280-113022-11	Windshield L.H.	1		X		X		X	X		
35	EC-801-807	Adhesive	AR		X		X		X	X		
36	280-113024-1	Post Assembly	1		X		X		X	X		
37	#4016	Foam Tape 1" Wide	AR		X		X		X	X		
38	280-113022-17	Stiffener	1		X		X		X	X		
39	CR91484-4-3	Rivet	AR		X		X		X	X		
39a	CR91484-4-4	Rivet	AR		X		X		X	X		
39b	CR91484-4-5	Rivet	AR		X		X		X	X		
40	280-113022-14	Lower Window R.H.	1		X		X		X	X		
41	280-113022-13	Lower Window L.H.	1		X		X		X	X		
42	#4016	Foam Tape 3/4" Wide	AR		X		X		X	X		
43	280-113022-15	Upper Window - L.H.	1		X		X		X	X		
44	280-113022-16	Upper Window - R.H.	1		X		X		X	X		
50	280-128000-2	Baggage Compartment	1		X		X		X	X		
51	280-114507-1	Door Assembly	1		X		X		X	X		
52	AN526-832R8	Screw	2		X		X		X	X		
	AN960PD8L	Washer	4		X		X		X	X		
	AN364-832A	Nut	2		X		X		X	X		
53	280-114500-13	Catch Plate	1		X		X		X	X		
54	#4316	Tape 3/4" Wide	AR		X		X		X	X		
55	28-12830-11	Placard	1		X		X		X	X		
56	28-113047-12	Rain Fairing R.H.	1		X		X		X	X		
57	28-113047-11	Rain Fairing L.H.	1		X		X		X	X		
58	28-113041-11	Cabin Trim L.H.	1		X		X		X	X		
59	28-113041-12	Cabin Trim R.H.	1		X		X		X	X		

UNCONTROLLED COPY WHEN DOWNLOADED OR PRINTED
Visit www.enstrombelicopter.com for instructions to order an original manual and to register for email notification updates.

UNCONTROLLED COPY WHEN DOWNLOADED OR PRINTED

Visit www.enstromhelicopter.com for instructions to order an original manual and to register for email notification updates.

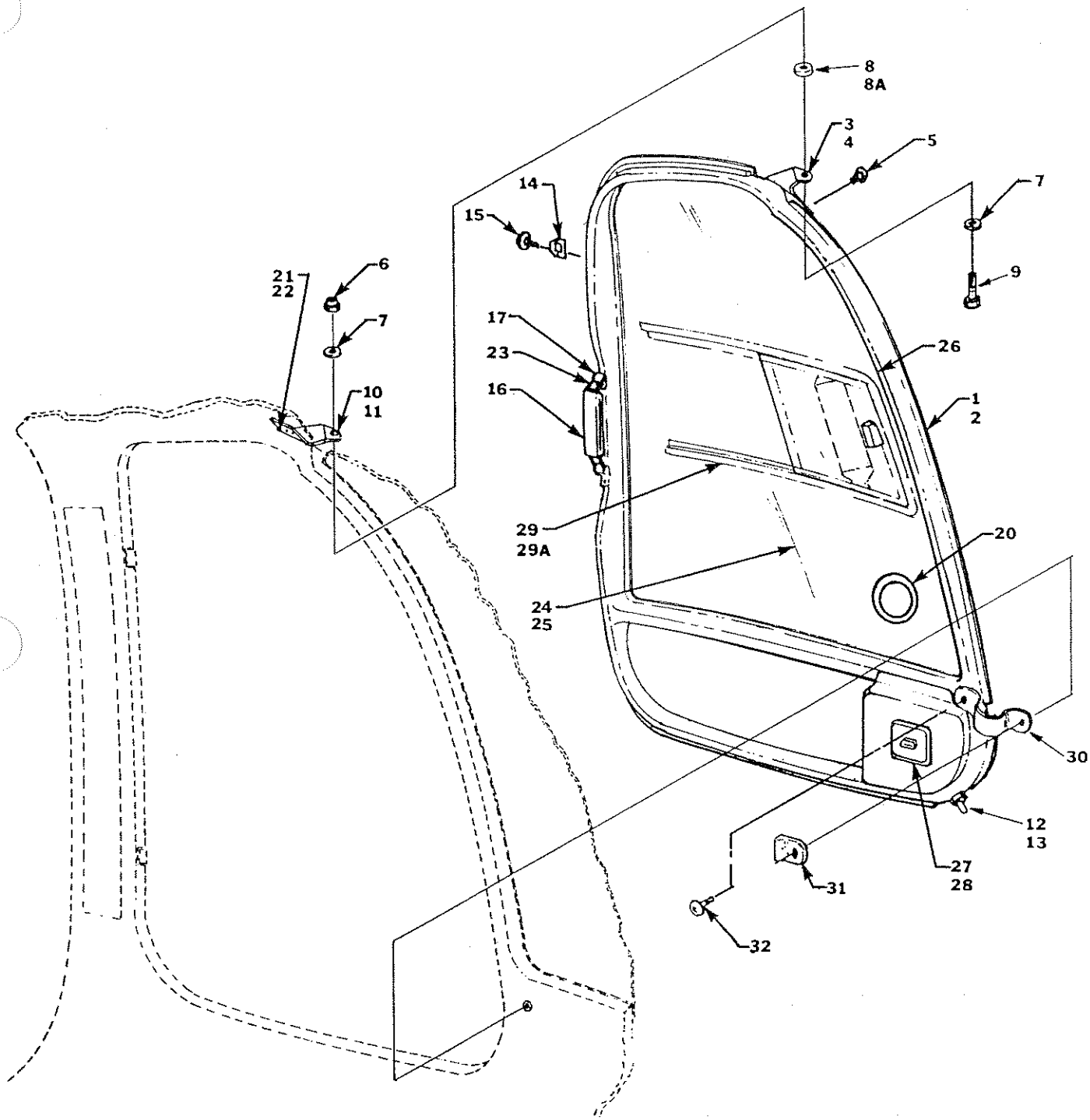

280F CABIN DOOR

FIGURE 7-4A

UNCONTROLLED COPY WHEN DOWNLOADED OR PRINTED

Visit www.enstromhelicopter.com for instructions to order an original manual and to register for email notification updates.

UNCONTROLLED COPY WHEN DOWNLOADED OR PRINTED

Visit www.enstromhelicopter.com for instructions to order an original manual and to register for email notification updates.

Figure 7-4A

ITEM NUMBER	PART NUMBER	DESCRIPTION	QTY. PER ASSY.	MODELS AFFECTED								
				F28A	280	F28C	280C	F28F	280F	280FX		
1	280-113027-2	Door Assembly R.H.	1		X		X		X	X		
2	280-113027-1	Door Assembly L.H.	1		X		X		X	X		
3	280-113027-24	Hinge R.H.	1		X		X		X	X		
4	280-113027-23	Hinge L.H.	1		X		X		X	X		
5	AN525-832R8	Screw	4		X		X		X	X		
6	AN365-428A	Nut	1		X		X		X	X		
7	AN960-416	Washer	2		X		X		X	X		
8	28-16210-3	Spacer	AR		X		X		X	X		
8a	28-16211-1	Spacer	AR		X		X		X	X		
8b	1/4 Harper	Washer	AR		X		X		X	X		
9	AN4-7A	Bolt	1		X		X		X	X		
10	280-113032-12	Hinge Bracket R.H.	1		X		X		X	X		
11	280-113032-11	Hinge Bracket L.H.	1		X		X		X	X		
12	280-113027-31	Hinge Stud	1		X		X		X	X		
13	AN345-1032	Nut	1		X		X		X	X		
14	280-113039-11	Latch Striker	2		X		X		X	X		
15	AN525-832R8	Screw	4		X		X		X	X		
16	#35	Leather Handle	1		X		X		X	X		
17	NK525-832R10	Screw	2		X		X		X	X		
20	CC-3251	Snap Vent	AR		X		X		X	X		
21	AN3-5A	Bolt	2		X		X		X	X		
22	AN960-10	Washer	2		X		X		X	X		
24	280-113027-13	Plexiglas L.H.	1		X		X		X	X		
25	280-113027-14	Plexiglas R.H.	1		X		X		X	X		
26	2500-4	Weather Strip	AR		X		X		X	X		
27	9A-20580	Ashtray (Opt.)	1		X		X		X	X		
28	AN530-6R6	Screw (Opt.)	2		X		X		X	X		
29	28-113046-3	Sliding Window Kit(Opt.)	AR		X		X		X	X		
29a	28-113046-4	Sliding Window Kit(Opt.)	AR		X		X		X	X		
30	280-113036-1	Restraint Strap Assy.	1		X		X		X	X		
31	280-113037-1	Guide	1		X		X		X	X		
32	NK525-10R12	Screw	2		X		X		X	X		

UNCONTROLLED COPY WHEN DOWNLOADED OR PRINTED
Visit www.enstromhelicopter.com for instructions to order an original manual and to register for email notification updates.

UNCONTROLLED COPY WHEN DOWNLOADED OR PRINTED

Visit www.enstromhelicopter.com for instructions to order an original manual and to register for email notification updates.

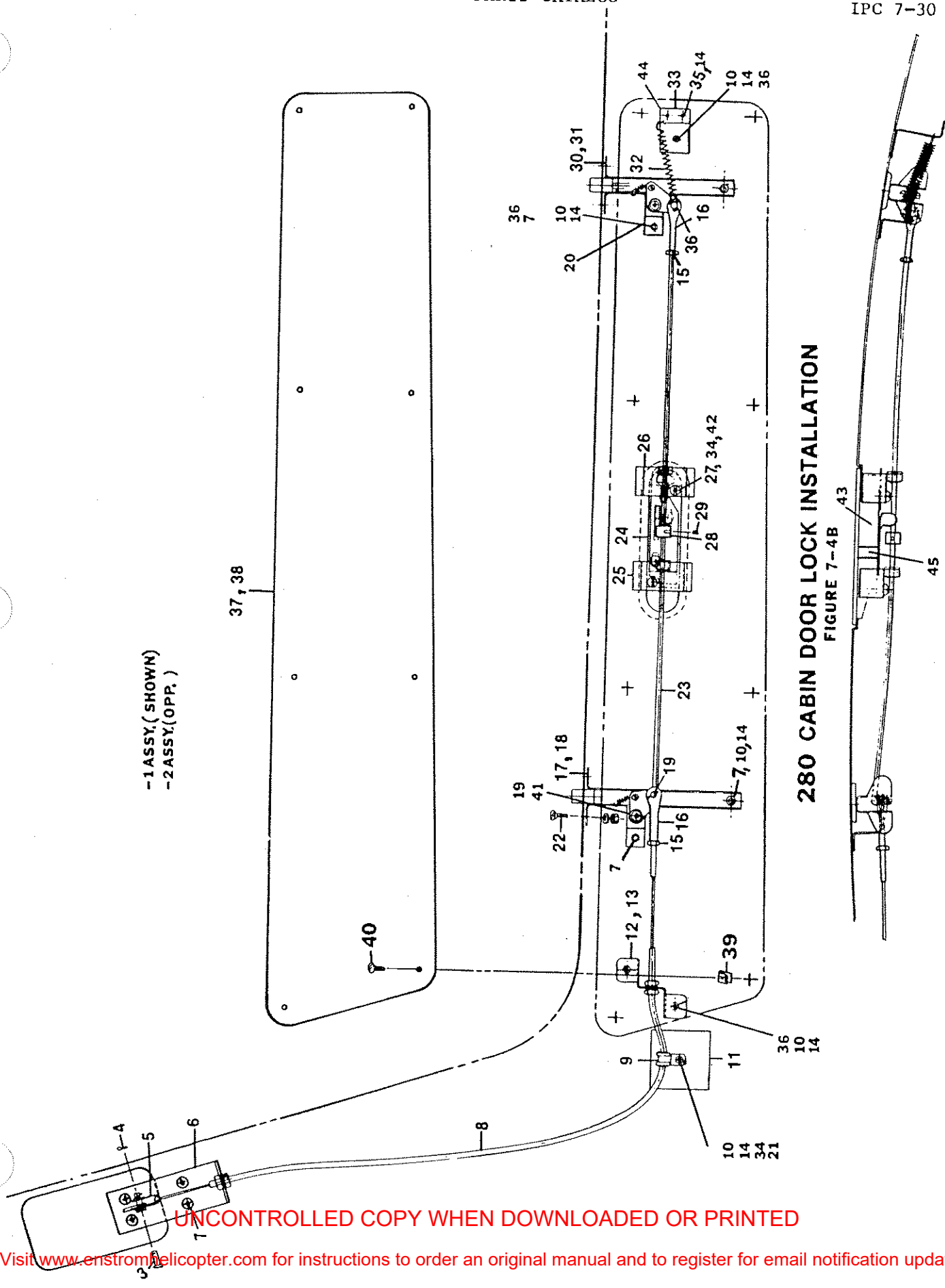

280 CABIN DOOR LOCK INSTALLATION
FIGURE 7-4B

UNCONTROLLED COPY WHEN DOWNLOADED OR PRINTED
Visit www.enstromhelicopter.com for instructions to order an original manual and to register for email notification updates.

UNCONTROLLED COPY WHEN DOWNLOADED OR PRINTED

Visit www.enstromhelicopter.com for instructions to order an original manual and to register for email notification updates.

Figure 7-48

ITEM NUMBER	PART NUMBER	DESCRIPTION	QTY. PER ASSY.	MODELS AFFECTED								
				F28A	280	F28C	280C	F28F	280F	280FX		
1	280-117000-1	Door Latch LH/Assy.	1		X		X		X	X		
2	280-117000-2	Door Latch RH/Assy.	1		X		X		X	X		
3	AN393-11	Pin	4		X		X		X	X		
4	AN381-2-7	Cotter Pin	4		X		X		X	X		
5	280-117001-15	Clevis	2		X		X		X	X		
6	280-117001-23	Retainer	2		X		X		X	X		
7	AN525-832R8	Screw	6		X		X		X	X		
8	280-117002-1	Cable	2		X		X		X	X		
9	MS21919-DG3	Clamp	2		X		X		X	X		
10	AN960-8L	Washer	16		X		X		X	X		
11	280-117000-17	Backing Plate	2		X		X		X	X		
12	280-117000-26	Bracket RH	1		X		X		X	X		
13	280-117000-25	Bracket LH	1		X		X		X	X		
14	AN365-832A	Nut	8		X		X		X	X		
15	AN315-3R	Nut	4		X		X		X	X		
16	AN665-21R	Clevis	2		X		X		X	X		
17	280-117003-2	Latch Assembly RH	1		X		X		X	X		
18	280-117003-1	Latch Assembly LH	1		X		X		X	X		
19	AN960-10L	Washer	6		X		X		X	X		
20	28-13605-4	Shim	AR		X		X		X	X		
20a	28-13605-5	Shim	AR		X		X		X	X		
20b	28-13605-6	Shim	AR		X		X		X	X		
20c	28-13605-7	Shim	AR		X		X		X	X		
20d	28-13605-8	Shim	AR		X		X		X	X		
21	AN525-832R10	Screw	2		X		X		X	X		
22	AN507-8R9	Screw	8		X		X		X	X		
23	280-117003-27	Push Rod Assembly	2		X		X		X	X		
24	280-117001-13	Latch	2		X		X		X	X		
25	280-117001-7	Latch Retainer	2		X		X		X	X		
26	280-117001-5	Latch Retainer	2		X		X		X	X		
27	AN526-1032-8	Screw	4		X		X		X	X		
28	280-117001-25	Latch Stop	2		X		X		X	X		
29	8-32X1/4IN	Screw	2		X		X		X	X		

UNCONTROLLED COPY WHEN DOWNLOADED OR PRINTED
Visit www.enstromhelicopter.com for instructions to order an original manual and to register for email notification updates.

Figure 7-4B (Cont.)

ITEM NUMBER	PART NUMBER	DESCRIPTION	QTY. PER ASSY.	MODELS AFFECTED								
				F28A	280	F28C	280C	F28F	280F	280FX		
30	280-117003-4	Latch Retainer RH	1		X		X		X	X		
31	280-117003-3	Latch Retainer LH	1		X		X		X	X		
32	280-117000-10	Spring CS-31	1		X		X		X	X		
33	280-117000-15	Bracket	2		X		X		X	X		
34	AN960-10	Washer	4		X		X		X	X		
35	AN531-6R6	Screw	4		X		X		X	X		
36	AN525-832R7	Screw	7		X		X		X	X		
37	280-113038-12	Panel RH	1		X		X		X	X		
38	280-113038-11	Panel LH	1		X		X		X	X		
39	A1785-621	Nut Plate	16		X		X		X	X		
40	AN530-6R8	Screw	16		X		X		X	X		
41	NK525-1032R12	Screw	4		X		X		X	X		
42	AN935-10	Lock Washer	4		X		X		X	X		
43	H2532-13	Door Handle	1		X		X		X	X		
44	A1784-621	Nut Plate	4		X		X		X	X		
45	110927-3	Matching Lock Set	1		X		X		X	X		

All Hardware Quantities are for one Door Latch Install.

UNCONTROLLED COPY WHEN DOWNLOADED OR PRINTED
Visit www.eastcoastcopters.com for instructions to order original manual and to register for email notification updates.

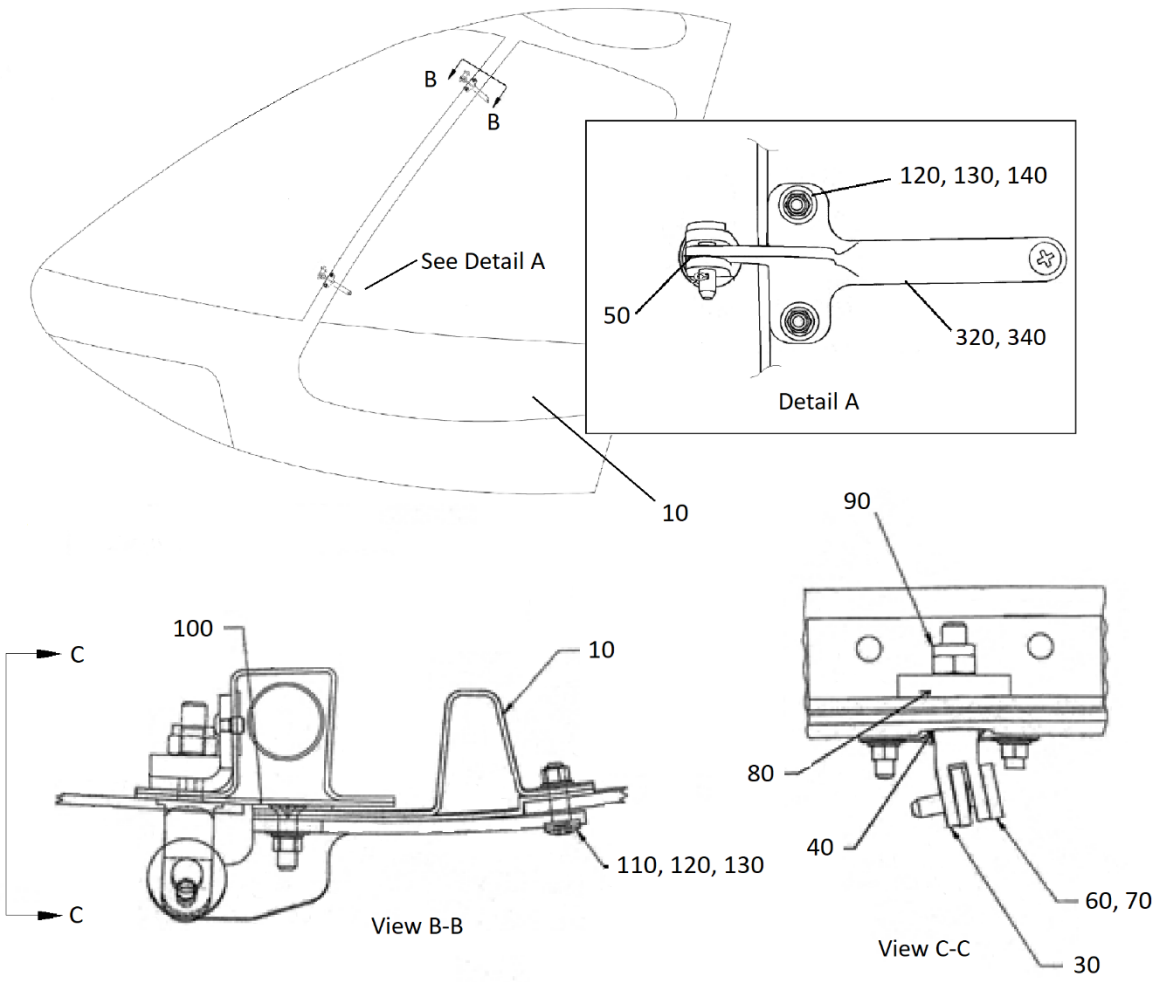

Sheet 1 of 3

FIGURE 7-4C. 280FX CABIN DOORS ASSEMBLY/INSTALLATION

UNCONTROLLED COPY WHEN DOWNLOADED OR PRINTED

Visit www.enstromhelicopter.com for instructions to order an original manual and to register for email notification updates.

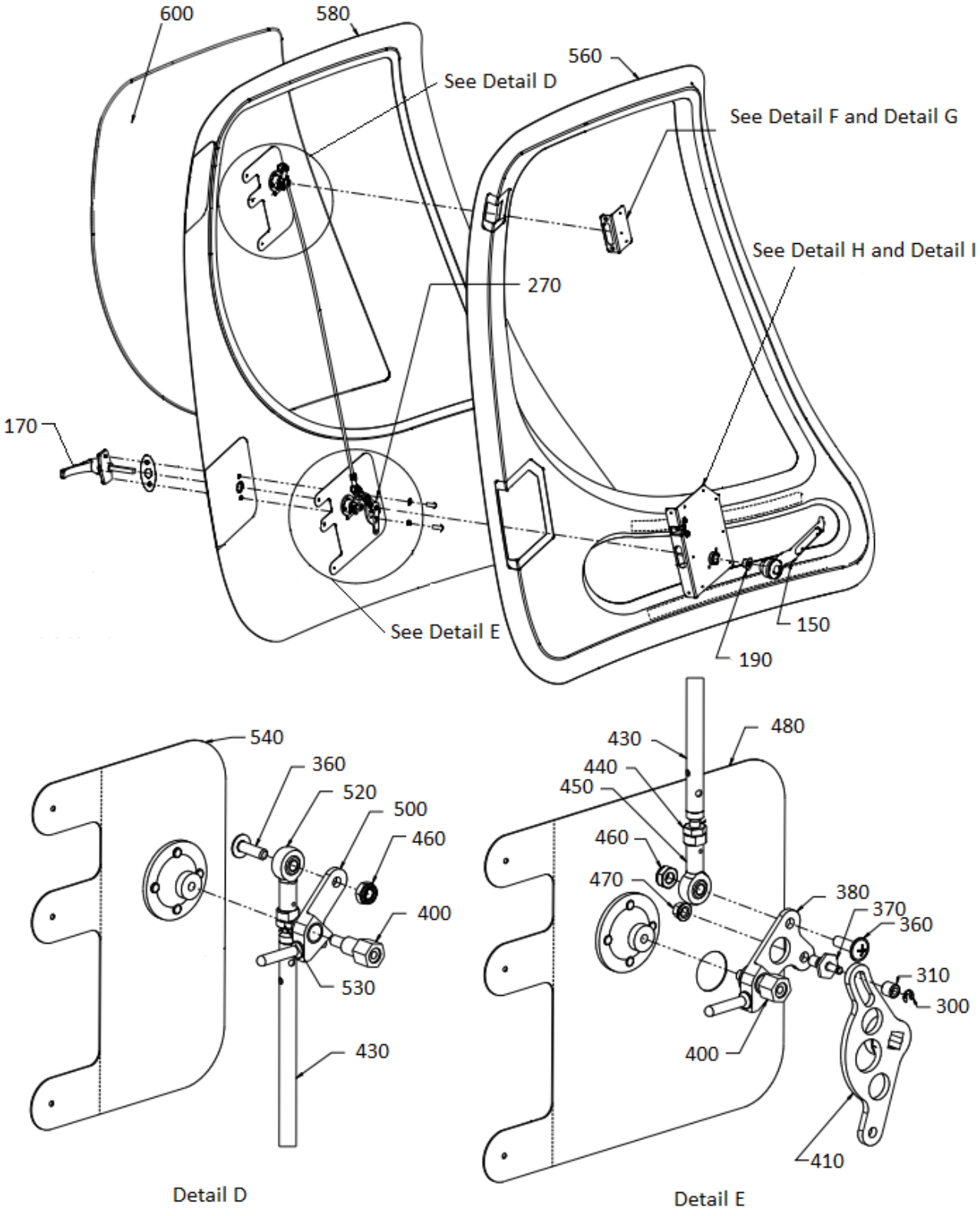

Sheet 2 of 3

FIGURE 7-4C. 280FX CABIN DOORS ASSEMBLY/INSTALLATION

UNCONTROLLED COPY WHEN DOWNLOADED OR PRINTED

Visit www.enstromhelicopter.com for instructions to order an original manual and to register for email notification updates.

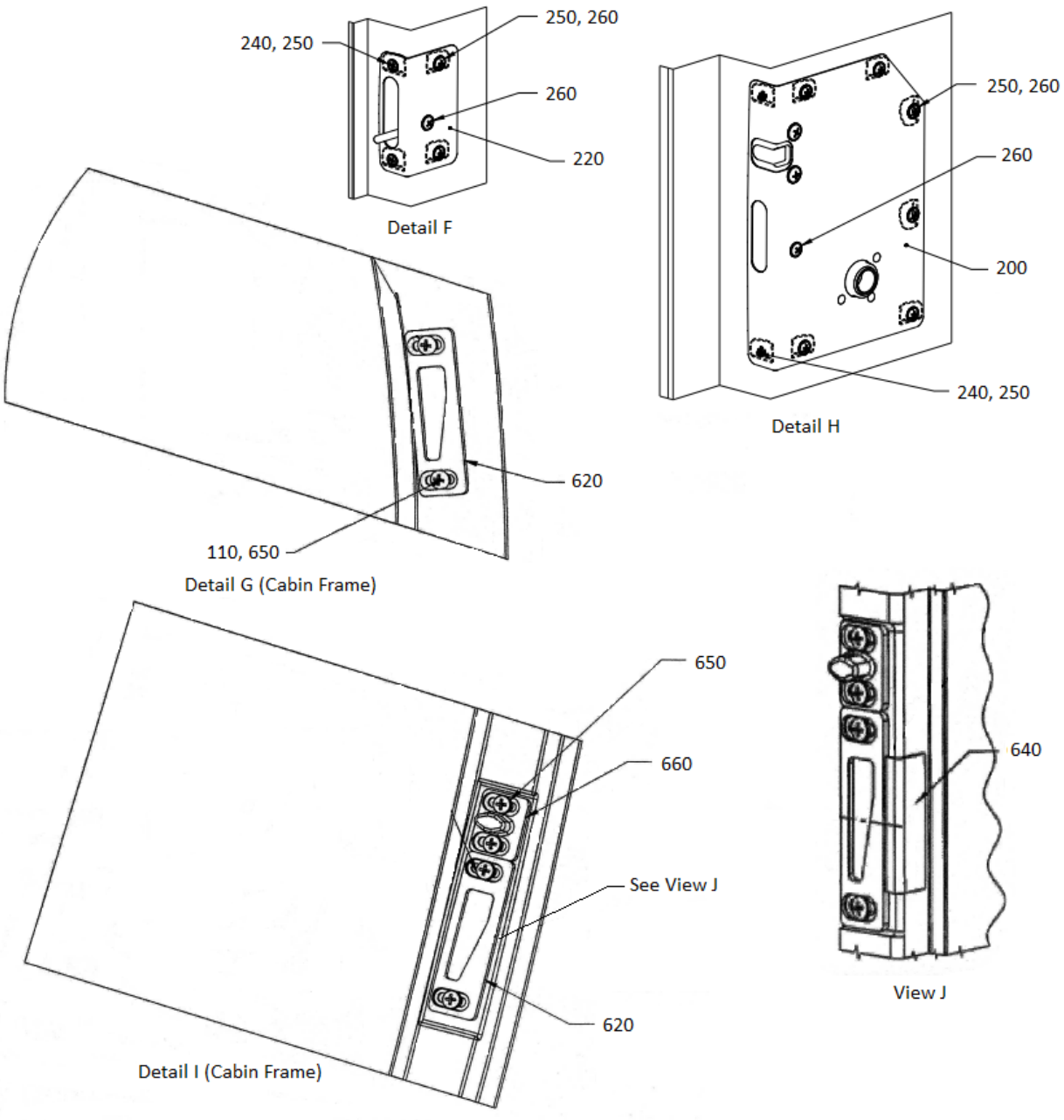

Sheet 3 of 3

FIGURE 7-4C. 280FX CABIN DOORS ASSEMBLY/INSTALLATION

UNCONTROLLED COPY WHEN DOWNLOADED OR PRINTED

Visit www.enstromhelicopter.com for instructions to order an original manual and to register for email notification updates.

FIGURE 7-4C. 280FX CABIN DOORS ASSEMBLY/INSTALLATION

ITEM NUMBER	PART NUMBER	DESCRIPTION	QTY PER ASSY	MODELS AFFECTED						
				F-28A	280	F-28C	280C	F-28F	280F	280FX
10▲	28-113139-1	Bonded Door Assy - LH	1							X
-20▲	28-113139-2	Bonded Door Assy - RH	1							X
30	4118278-23	. Hinge Post	4							X
40	ECD050-11	. Washer	A/R							X
50	4118283-11	. Hinge Bushing	4							X
60	MS20392-2C17	. Clevis Pin	4							X
70	AN381-2-10	. Cotter Pin	4							X
-75	MS17984C305	. Quick Release Pin (Alternate for MS20392-2C17 & AN381-2-10)	A/R							X
80	4118278-21	. Radius Block	4							X
90	MS21044N4	. Nut	4							X
100	4118284-13	. Hinge Doubler	4							X
110	MS27039-1-09	. Screw	16							X
120	NAS1149D0316H	. Washer	12							X
130	MS21042-3	. Nut	12							X
140	MS24694-S52	. Screw	8							X
150	28-113122-1	. Door Handle Assy - LH	1							X
-160	28-113122-2	. Door Handle Assy - RH	1							X
170	28-113122-3	. Outside Handle Assy (LH)	1							X
-175	ECD060-11	. Handle (LH) (Superseded by 28-113122-3)	1							X
-180	28-113122-4	. Outside Handle Assy (RH)	1							X
-185	ECD060-12	. Handle (RH) (Superseded by 28-113122-4)	1							X
190	4118265-21	. Bushing	1							X
200	28-113114-1	. Lower Door Cover Assy - LH	1							X
-210	28-113114-2	. Lower Door Cover Assy - RH	1							X
220	28-113118-11	. Upper Door Cover - LH	1							X
-230	28-113118-12	. Upper Door Cover - RH	1							X
240	MS24693-S48	. Screw	4							X
250	CB6009CR08-1P	. Click Bond Nutplate	12							X

UNCONTROLLED COPY WHEN DOWNLOADED OR PRINTED

Visit www.enstromhelicopter.com for instructions to order an original manual and to register for email notification updates.

FIGURE 7-4C. 280FX CABIN DOORS ASSEMBLY/INSTALLATION

ITEM NUMBER	PART NUMBER	DESCRIPTION	QTY PER ASSY	MODELS AFFECTED						
				F-28A	280	F-28C	280C	F-28F	280F	280FX
260	AN525-832R6	. Screw	10							X
270	MS18066-8	. Set Screw	1							X
-280	X1543HT	. Seal	A/R							X
-290	4119839-11	. Placard	1							X
300	MS16633-4012	. Retaining Ring	1							X
310	28-113113-13	. Cam Roller	1							X
320	28-113135-11	. Door Hinge - Upper LH	1							X
-330	28-113135-12	. Door Hinge - Upper RH	1							X
340	28-113136-11	. Door Hinge - Lower LH	1							X
-350	28-113136-12	. Door Hinge - Lower RH	1							X
360	AN525-10R10	. Screw	2							X
370	28-113113-11	. Cam Pin & Stud	1							X
380	28-113101-3	. Lower Bellcrank Assy - LH	1							X
-390	28-113101-4	. Lower Bellcrank Assy - RH	1							X
400	28-113120-11	. Shoulder Screw	2							X
410	28-113112-11	. Cam Lever Arm - LH	1							X
-420	28-113112-12	. Cam Lever Arm - RH	1							X
430	28-113140-1	. Push Pull Rod Weldment	1							X
440	AN315-3L	. LH Nut	1							X
450	ALJFL3T	. LH Rod End	1							X
-455	60685K31	. LH Rod End (Alternate for ALJFL3T)	2							X
460	MS21083N3	. Nut	2							X
470	MS21042-3	. Nut	1							X
480	28-113103-3	. Lower Doubler Assy - LH	1							X
-490	28-113103-4	. Lower Doubler Assy -RH	1							X
500	28-113101-1	. Upper Bellcrank Assy - LH	1							X
-510	28-113101-2	. Upper Bellcrank Assy - RH	1							X

UNCONTROLLED COPY WHEN DOWNLOADED OR PRINTED

Visit www.enstromhelicopter.com for instructions to order an original manual and to register for email notification updates.

FIGURE 7-4C. 280FX CABIN DOORS ASSEMBLY/INSTALLATION

ITEM NUMBER	PART NUMBER	DESCRIPTION	QTY PER ASSY	MODELS AFFECTED						
				F-28A	280	F-28C	280C	F-28F	280F	280FX
520	ALJF3T	. RH Rod End	1							X
-525	60685K31	. RH Rod End (Alternate for ALJF3T)	1							X
530	AN315-3R	. RH Nut	1							X
540	28-113103-1	. Upper Doubler Assy - LH	1							X
-550	28-113103-2	. Upper Doubler Assy - RH	1							X
560	28-113125-11	. Door Skin Doubler - LH	1							X
-570	28-113125-12	. Door Skin Doubler - RH	1							X
580	28-113124-11	. Door Skin - LH	1							X
-590	28-113124-12	. Door Skin - RH	1							X
600	28-113134-11	. LH Door Window	1							X
-610	28-113134-12	. RH Door Window	1							X
620	4118290-16	. Strike	2							X
-630	4118290-15	. Strike	2							X
640	28-113129-11	. Strike Guard	1							X
650	A10K166	. Rivnut	12							X
660	28-113128-11	. Door Guide	2							X

▲ Effectivity and eligibility 280FX S/N 2147, 2168, and subsequent.

Note: All quantities listed are per door.

UNCONTROLLED COPY WHEN DOWNLOADED OR PRINTED

Visit www.enstromhelicopter.com for instructions to order an original manual and to register for email notification updates.

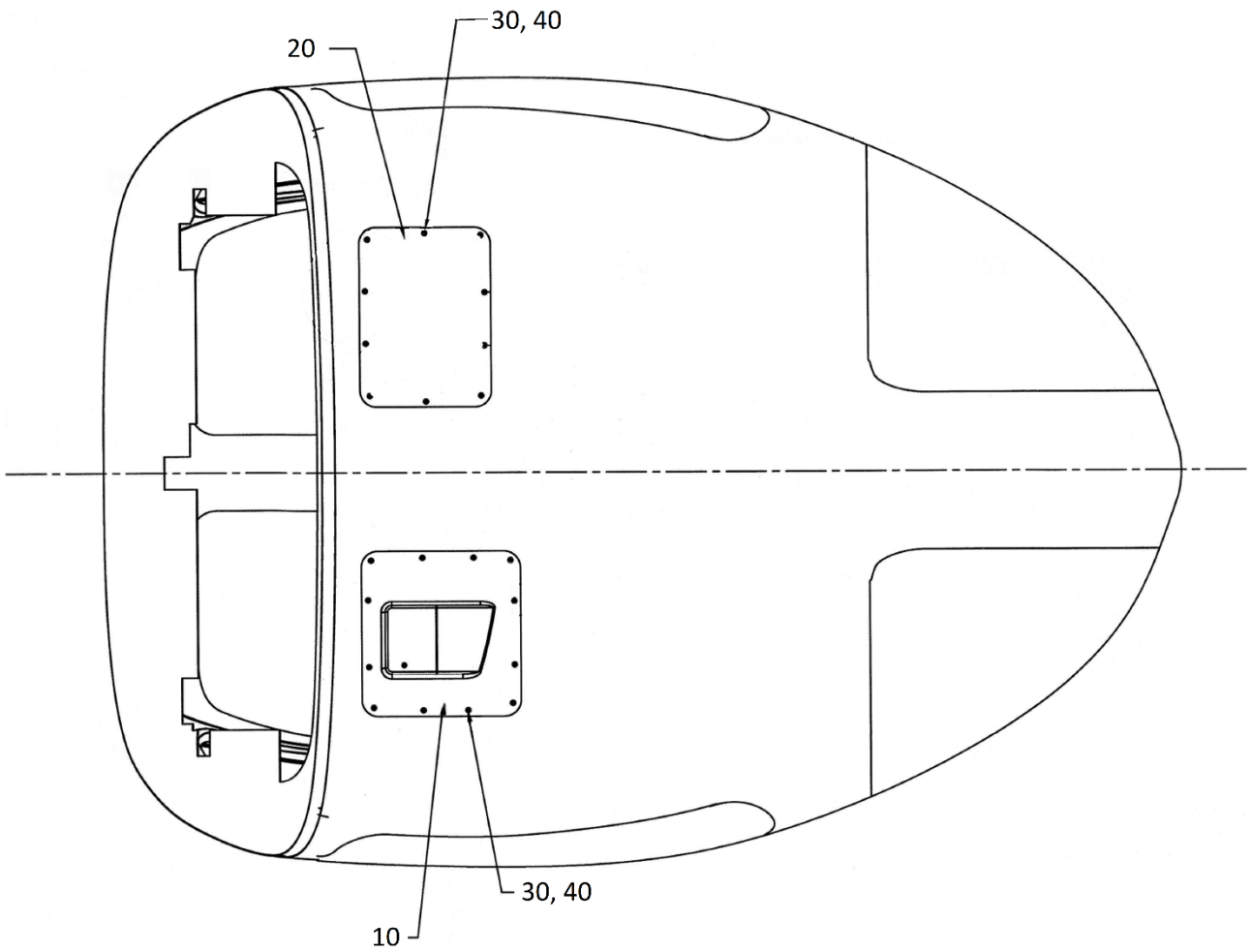

FIGURE 7-4D. 280FX CABIN CLOSEOUT INSTALLATION

UNCONTROLLED COPY WHEN DOWNLOADED OR PRINTED

Visit www.enstromhelicopter.com for instructions to order an original manual and to register for email notification updates.

FIGURE 7-4D. 280FX CABIN CLOSEOUT INSTALLATION

ITEM NUMBER	PART NUMBER	DESCRIPTION	QTY PER ASSY	MODELS AFFECTED						
				F-28A	280	F-28C	280C	F-28F	280F	280FX
–▲	28-113055-1	Closeout Installation	REF							X
10	28-113054-1	. Closeout Assembly	1							X
20	28-113054-12	. Closeout	1							X
30	8 X 3/8	. Screw	22							X
40	A01787-8Z-1D	. Tinnerman Nut	22							X

▲ Effectivity and eligibility 280FX S/N 2168 and subsequent.

UNCONTROLLED COPY WHEN DOWNLOADED OR PRINTED

Visit www.enstromhelicopter.com for instructions to order an original manual and to register for email notification updates.

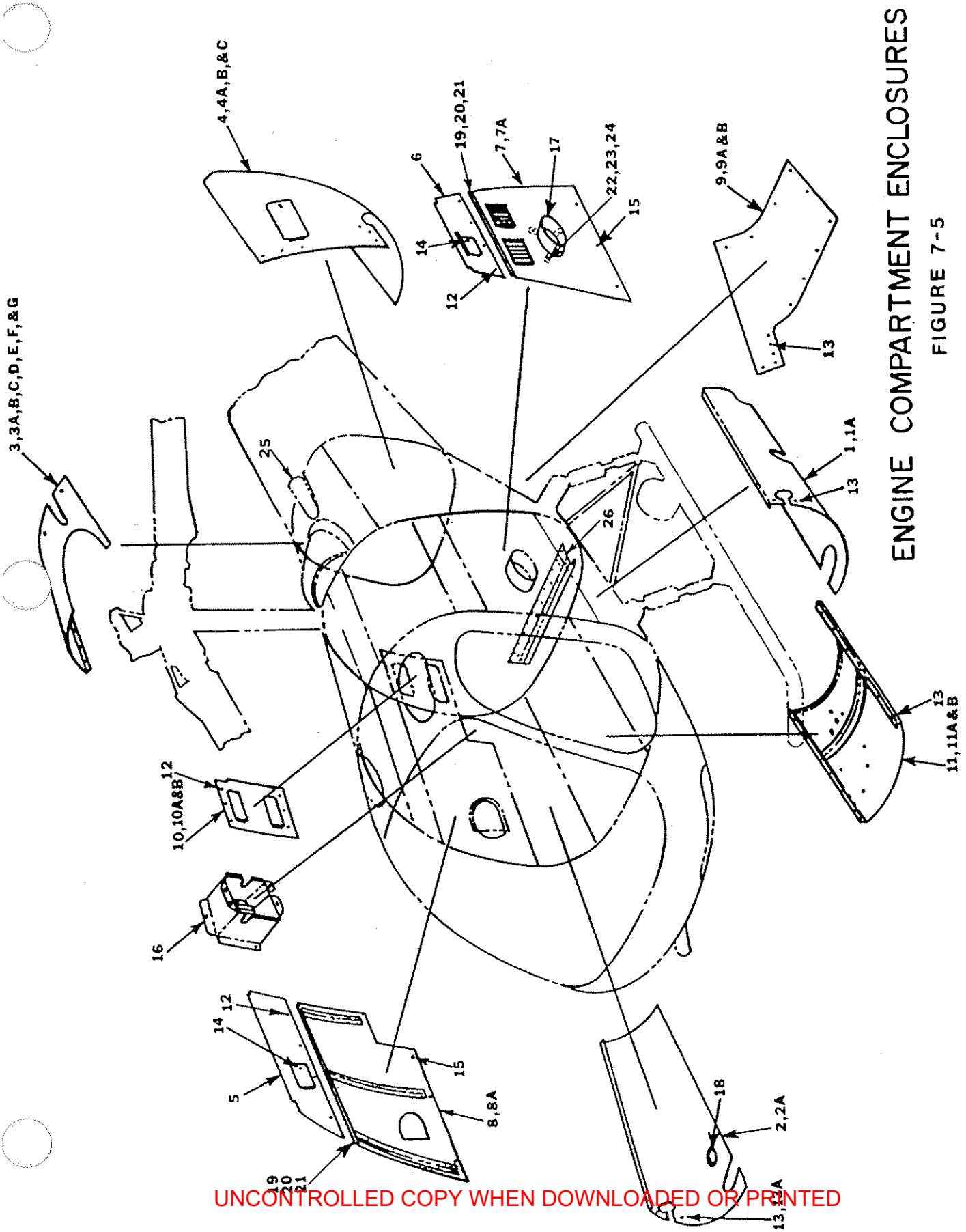

ENGINE COMPARTMENT ENCLOSURES

FIGURE 7-5

UNCONTROLLED COPY WHEN DOWNLOADED OR PRINTED

Visit www.enstromhelicopter.com for instructions to order an original manual and to register for email notification updates.

UNCONTROLLED COPY WHEN DOWNLOADED OR PRINTED

Visit www.enstromhelicopter.com for instructions to order an original manual and to register for email notification updates.

Figure 7-5

ITEM NUMBER	PART NUMBER	DESCRIPTION	QTY. PER ASSY.	MODELS AFFECTED								
				F28A	280	F28C	280C	F28F	280F	280FX		
1	28-114015-1	Bottom Side LH	1			X*	X	X	X	X		
1a	280-114503-3	Bottom Side LH	1		X							
2	28-114015-2	Bottom Side RH	1			X*	X	X	X	X		
2a	280-114503-4	Bottom Side RH	1		X							
3	28-114010-11	Top Skin	1			X	X	X	X			
3a	28-114010-12	Channel	2		X	X	X	X	X			
3b	280-114501-1	Top Skin	1		X							
3c	28-114509	Air Scoop	1		X							
3d	28-11401-3	Air Scoop	1			X	X	X	X			
3e	28-114019-11	Top Skin	1							X		
3f	28-114025-1	Air Scoop Aft.	1							X		
3g	28-114019-13	Channel	2							X		
4	28-114011-17	Aft. Side LH (-5)	1							X		
4a	28-114011-13	Stiffener (-1, -3, -5,										
		& -7)	1		X	X	X	X	X	X		
4b	28-114011-15	Aft. Side LH (-3)	1							X		
4c	28-114011-11	Aft. Side LH (-1, -7)	1		X	X	X	X	X			
5	280-114502-4	Fwd. Side Cowl RH	1		X	X*	X	X	X	X		
6	280-114502-3	Fwd. Side Cowl RH	1		X	X*	X	X	X	X		
7	28-114017-1	Engine Door LH	1			X	X	X	X	X		
7a	280-114502-1	Engine Door LH	1		X							
8	28-114018-1	Engine Door RH	1			X	X	X	X	X		
8a	28-114002-3	Engine Door RH	1		X							
9	28-114012-11	Aft. Bottom Cowl	1			X*	X	X	X	X		
9a	280-114503-6	Aft. Bottom Cowl RH	1		X							
9B	280-114503-5	Aft. Bottom Cowl LH	1		X							
10	28-114013-11	Step Door	1		X	X	X	X	X	X		
10a	28-114013-12	Stiffener	1		X	X	X	X	X	X		
10b	28-114013-13	Panel	1		X	X	X	X	X	X		
11	28-114016-1	Bottom Center Cowl										
		(-1, -3, -5)	1			X	X	X	X	X		
11a	28-114016-3	Bottom Center Cowl (-7)	1						X			
11b	280-114503-1	Bottom Center Cowl	1		X							

NOTE: Items which are used on F-28C2 Models

UNCONTROLLED COPY WHEN DOWNLOADED OR PRINTED
Visit www.enstromhelicopter.com for instructions to order manual and to register for email notification updates.

Figure 7-5 (Cont.)

ITEM NUMBER	PART NUMBER	DESCRIPTION	QTY. PER ASSY.	MODELS AFFECTED								
				F28A	280	F28C	280C	F28F	280F	280FX		
12	82-11-120-16	Stud (Dzus)	AR			X	X	X	X	X		
13	NK-525-8R8	Screw	AR			X	X	X	X	X		
13a	1/2 x 8R	Screw	AR			X	X	X	X	X		
14	82-12-120-16	Stud (Dzus)	AR			X	X	X	X	X		
15	85-140-16	Stud (Dzus)	AR			X	X	X	X	X		
16	280-126003-1	Cooler Exit Duct	1		X	X	X	X	X	X		
17	28-114003-1	Shield Assy. Exhaust	1		X	X	X	X	X	X		
**18	GS-3	Grommet	AR			X	X	X	X	X		
19	AN507-632R5	Screw	AR			X	X	X	X	X		
20	AN960PD6L	Washer	AR			X	X	X	X	X		
21	AN364-632A	Lock Nut	AR			X	X	X	X	X		
22	AN525-832R7	Screw	3			X	X	X	X	X		
23	AN960-8L	Washer	3			X	X	X	X	X		
24	AN364-832A	Lock Nut	3			X	X	X	X	X		
25	28-11402-1	TR Shaft Fairing	1		X	X	X	X	X			
26	28-114508-11	Support Lower Cowl	1		X	X	X	X	X	X		
REF:	28-114014-1	Comp. Installation	1			X	X	X	X			
	28-114014-3	S/N 2001, 2003, 2004	1							X		
	28-114014-5	S/N 2005 & Sub.	1							X		
	28-114014-7	S/N 742 and Up							X			

UNCONTROLLED COPY WHEN DOWNLOADED OR PRINTED

**Must be removed before installation of this item.

Visit www.tcmfiles.com for information on latest revisions to this manual and to register for email notification updates.

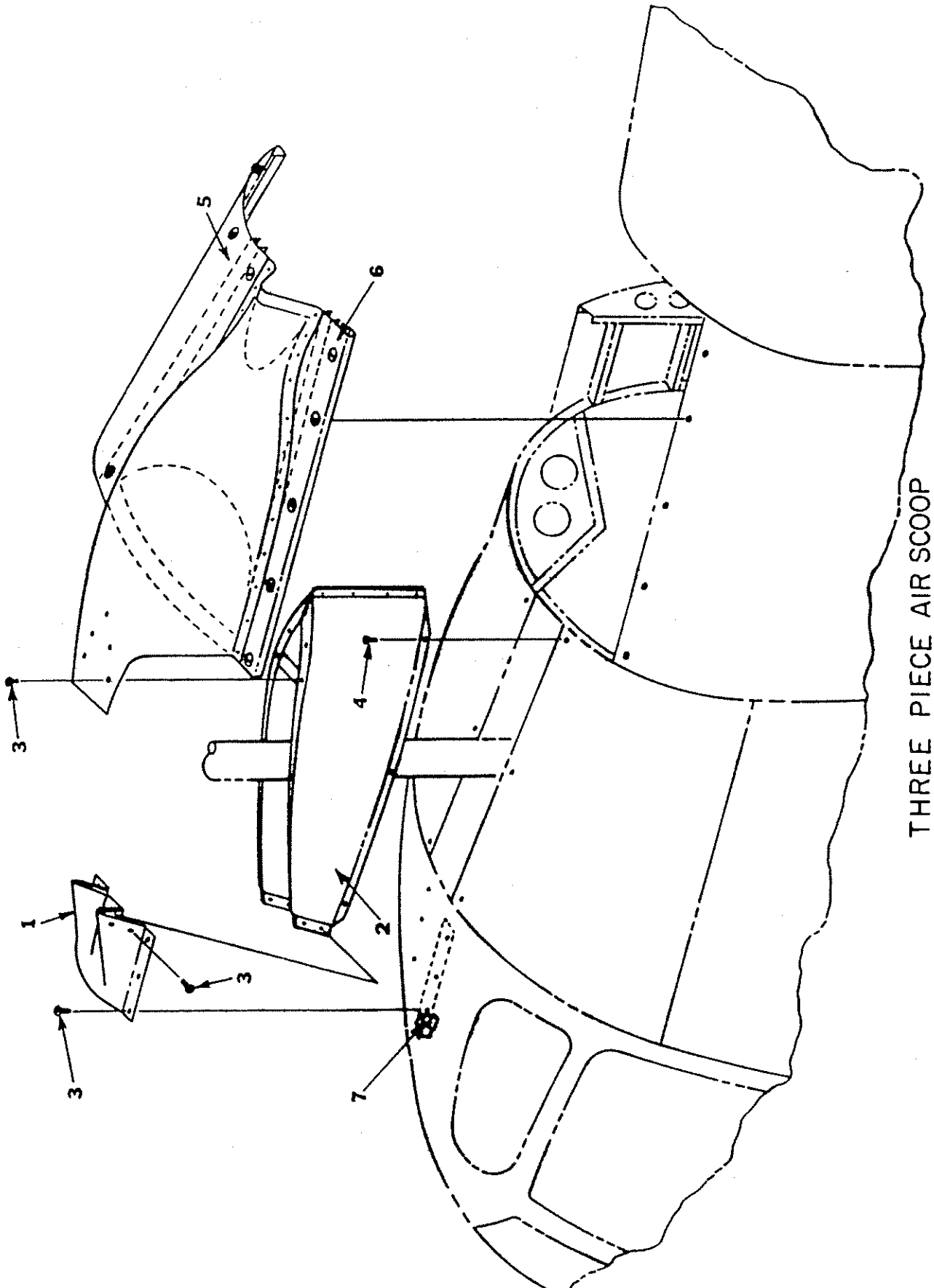

THREE PIECE AIR SCOOP
FIGURE 7-6

UNCONTROLLED COPY WHEN DOWNLOADED OR PRINTED

Visit www.enstromhelicopter.com for instructions to order an original manual and to register for email notification updates.

UNCONTROLLED COPY WHEN DOWNLOADED OR PRINTED

Visit www.enstromhelicopter.com for instructions to order an original manual and to register for email notification updates.

Figure 7-6

ITEM NUMBER	PART NUMBER	DESCRIPTION	QTY. PER ASSY.	MODELS AFFECTED								
				F28A	280	F28C	280C	F28F	280F	280FX		
1	28-114023-11	Air Scoop - Front	1							X		
2	28-114024-											
	11 & 12	Air Duct Center	2							X		
3	AN526-832R8	Screw	19							X		
4	AN526-832R10	Screw	4							X		
**5	28-114022-1	Cowl Side	1							X		
*6	28-114019-15	Panel Assembly	1							X		
**6	28-114019-11	Panel Assembly	1							X		
7	28-114026-3	Nut Plate Assembly	2							X		

UNCONTROLLED COPY WHEN DOWNLOADED OR PRINTED

Visit www.enstromhelicopter.com for instructions to order an original manual and to register for email notification updates.

*S/N 2005 & Subsequent

**S/N 2001-1004

UNCONTROLLED COPY WHEN DOWNLOADED OR PRINTED

Visit www.enstromhelicopter.com for instructions to order an original manual and to register for email notification updates.

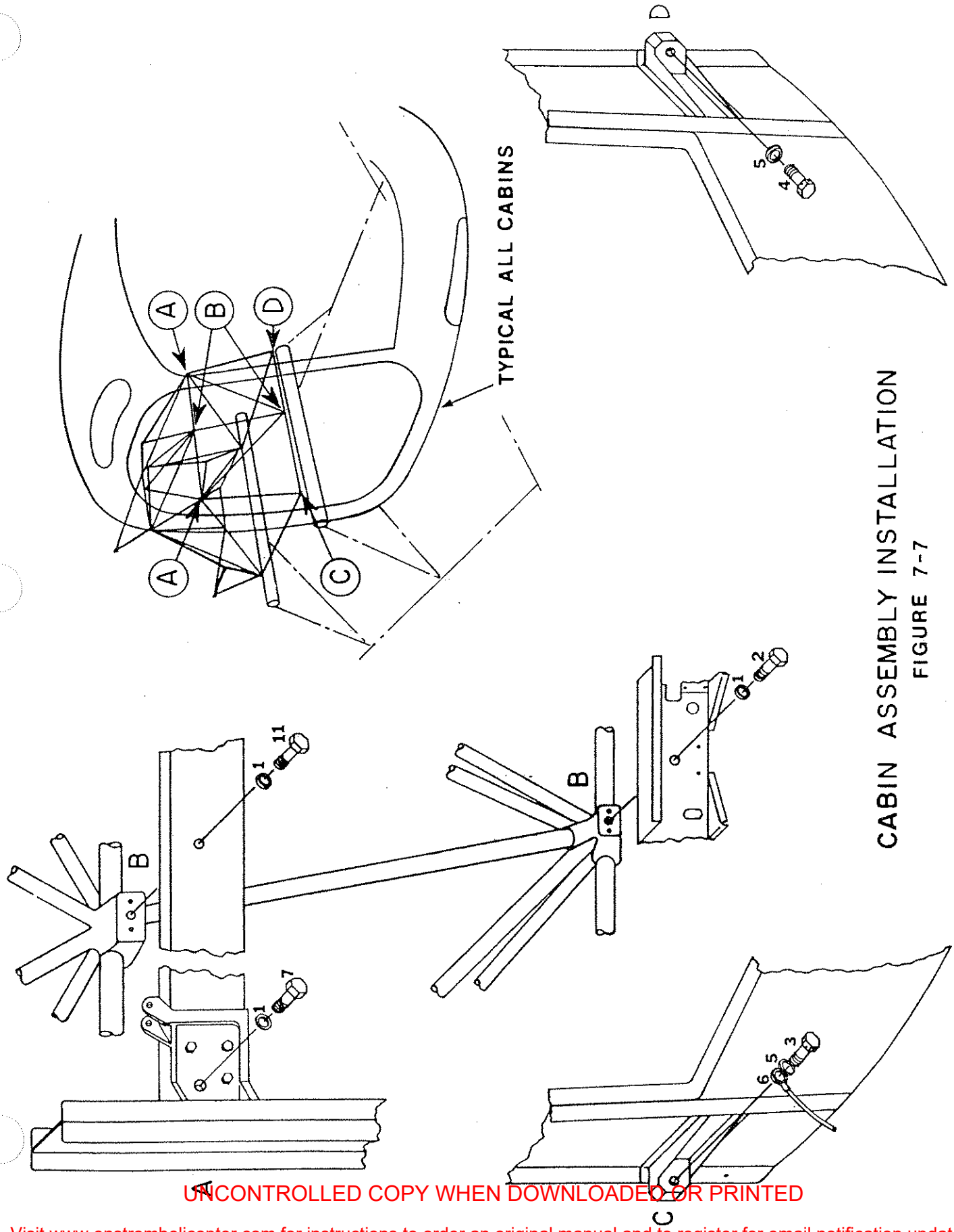

CABIN ASSEMBLY INSTALLATION

FIGURE 7-7

UNCONTROLLED COPY WHEN DOWNLOADED OR PRINTED

Visit www.enstromhelicopter.com for instructions to order an original manual and to register for email notification updates.

UNCONTROLLED COPY WHEN DOWNLOADED OR PRINTED

Visit www.enstromhelicopter.com for instructions to order an original manual and to register for email notification updates.

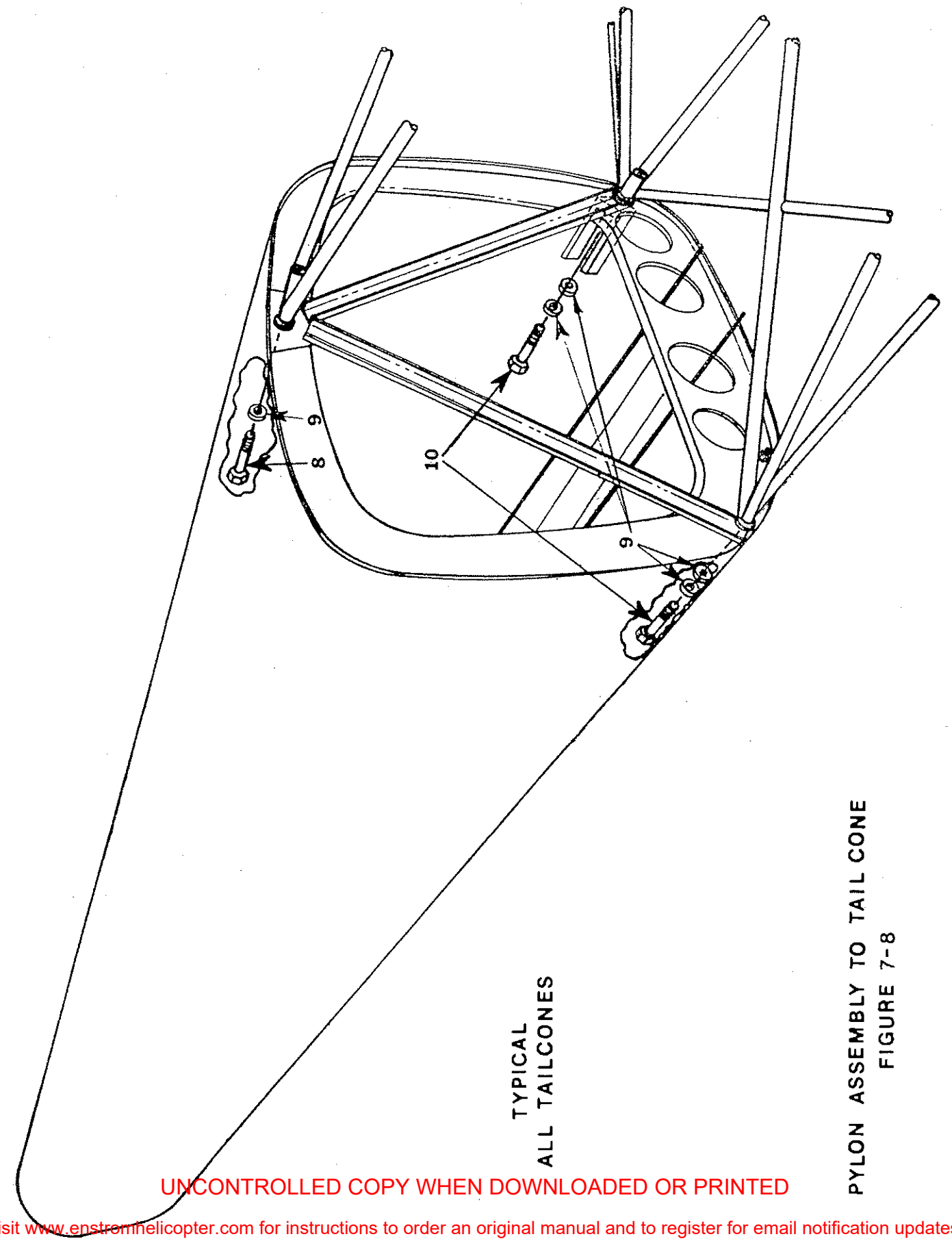

TYPICAL
ALL TAILCONES

PYLON ASSEMBLY TO TAIL CONE
FIGURE 7-8

UNCONTROLLED COPY WHEN DOWNLOADED OR PRINTED
Visit www.enstromhelicopter.com for instructions to order an original manual and to register for email notification updates.

UNCONTROLLED COPY WHEN DOWNLOADED OR PRINTED

Visit www.enstromhelicopter.com for instructions to order an original manual and to register for email notification updates.

Figure 7-7 & 7-8

ITEM NUMBER	PART NUMBER	DESCRIPTION	QTY. PER ASSY.	MODELS AFFECTED								
				F28A	280	F28C	280C	F28F	280F	280FX		
1	AN960-416L	Washer	4	X	X	X	X	X	X	X		
2	AN4-14A	Bolt	1	X	X	X	X	X	X	X		
3	AN5H-10A	Bolt	1	X	X	X	X	X	X	X		
4	AN5H-7A	Bolt	1	X	X	X	X	X	X	X		
5	AN960-516	Washer	2	X	X	X	X	X	X	X		
6	28-19006-24-1	Wire	1	X	X	X	X	X	X	X		
7	AN4-7A	Bolt	2	X	X	X	X	X	X	X		
8	NAS-146-DH-24	Bolt	1	X	X	X	X	X	X	X		
9	MS20002-C6	Washer	5	X	X	X	X	X	X	X		
10	NAS-146-DH-22	Bolt	2	X	X	X	X	X	X	X		
11	AN4-4A	Bolt	1	X	X	X	X	X	X	X		

UNCONTROLLED COPY WHEN DOWNLOADED OR PRINTED

Visit www.enstromhelicopter.com for instructions to order an original manual and to register for email notification updates.

UNCONTROLLED COPY WHEN DOWNLOADED OR PRINTED

Visit www.enstromhelicopter.com for instructions to order an original manual and to register for email notification updates.

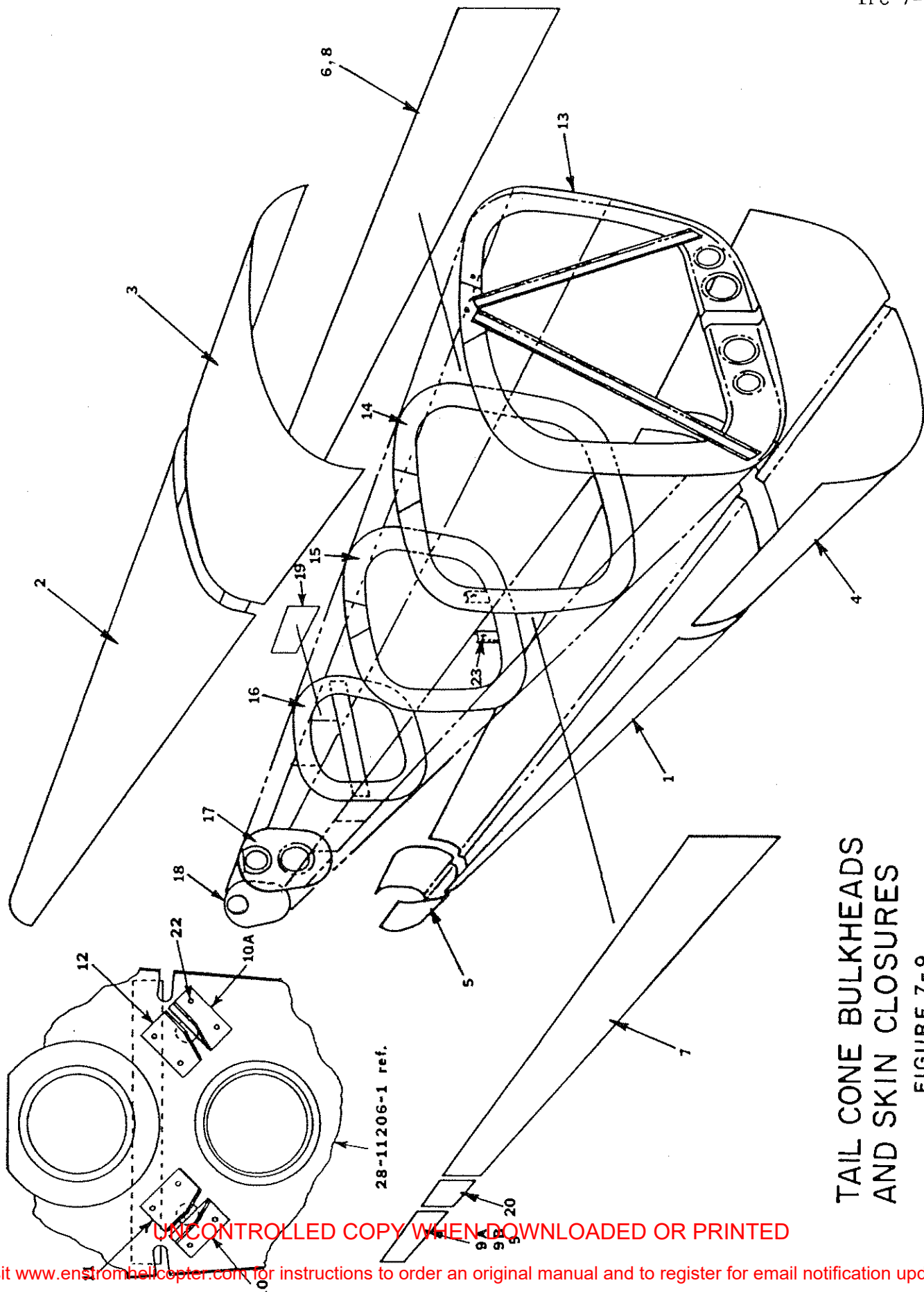

TAIL CONE BULKHEADS AND SKIN CLOSURES

FIGURE 7-9

UNCONTROLLED COPY WHEN DOWNLOADED OR PRINTED

Visit www.enstrom helicopter.com for instructions to order an original manual and to register for email notification updates.

UNCONTROLLED COPY WHEN DOWNLOADED OR PRINTED

Visit www.enstromhelicopter.com for instructions to order an original manual and to register for email notification updates.

Figure 7-9

ITEM NUMBER	PART NUMBER	DESCRIPTION	QTY. PER ASSY.	MODELS AFFECTED								
				F28A	280	F28C	280C	F28F	280F	280FX		
1	28-11201-6	Skin Bottom	1	X	X	X	X	X	X	X		
2	28-11201-5	Skin Top Aft	1	X	X	X	X	X	X	X		
3	28-11201-3	Skin Top Forward	1	X	X	X	X	X	X	X		
4	28-11201-4	Skin Bottom Forward	1	X	X	X	X	X	X	X		
5	28-11201-7	Skin Bottom Aft	1	X		X		X		X		
5a	280-112001-13	Skin Bottom Aft	1		X		X		X			
6	280-112001-11	Skin LH Side	1				X		X			
7	280-112001-12	Skin RH Side	1				X	X	X	X		
8	28-11201-8	Skin LH Side	1	X		X		X		X		
9	28-11201-12	Skin RH Side	1	X		X		X				
*9a	28-11236-31	Skin - Right	1					X		X		
9b	280-112001-15	Skin - Right	1		X		X		X			
10	28-11243-11	Pulley Bracket L.H.	1					X	X	X		
10a	28-11243-12	Pulley Bracket R.H.	1					X	X	X		
11	28-11242-11	Pulley Bracket L.H.	1					X	X	X		
12	28-11242-12	Pully Bracket R.H.	1					X	X	X		
13	28-11202-1	Bulkhead	1	X	X	X	X	X	X	X		
14	28-11203-1	Bulkhead	1	X	X	X	X	X	X	X		
15	28-11204-1	Bulkhead	1	X	X	X	X	X	X	X		
16	28-11205-1	Bulkhead	1	X		X		X				
**16a	280-112002-1	Bulkhead	1		X		X		X			
*16b	280-112002-3	Bulkhead	1					X		X		
17	28-11206-1	Bulkhead	1	X	X	X	X	X	X	X		
18	28-11207-1	Bulkhead	1	X	X	X	X	X	X	X		
19	28-11225	Access Plate - Left	1	X	X	X	X	X	X	X		
20	280-112006-11	Access Plate - Right	1					X	X	X		
22	CR-3213-4-2	Rivet	8					X	X	X		
23	NAS-1368-N8A	Grommet	2	X	X	X	X	X	X	X		

UNCONTROLLED COPY WHEN DOWNLOADED OR PRINTED
Visit www.enstromhelicopter.com for instructions to order an original manual and to register for email notification updates.

*Common Tailcone

UNCONTROLLED COPY WHEN DOWNLOADED OR PRINTED

Visit www.enstromhelicopter.com for instructions to order an original manual and to register for email notification updates.

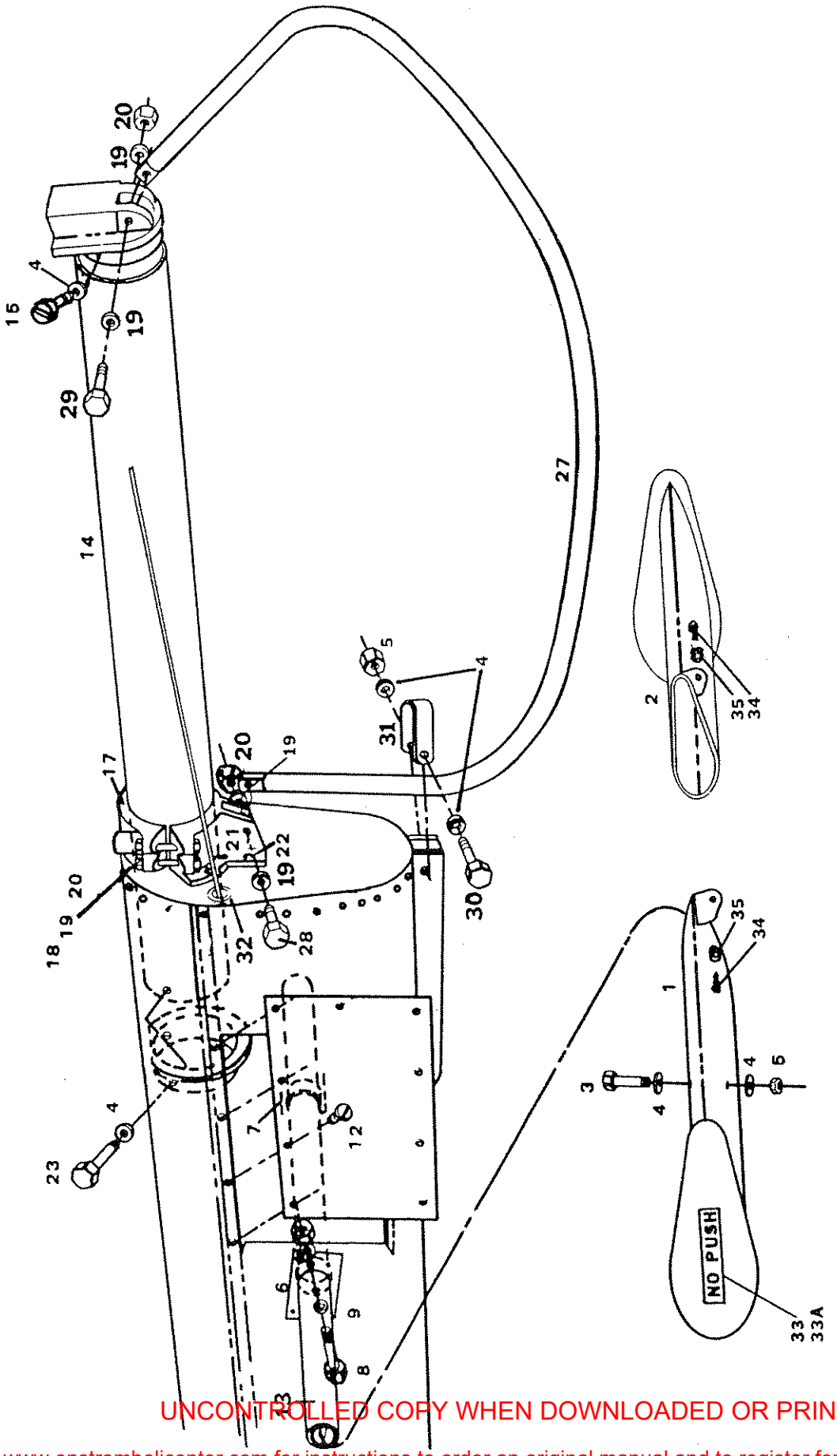

STABILIZER AND TAIL CONE EXTENSION
FIGURE 7-10

UNCONTROLLED COPY WHEN DOWNLOADED OR PRINTED
Visit www.enstromhelicopter.com for instructions to order an original manual and to register for email notification updates.

UNCONTROLLED COPY WHEN DOWNLOADED OR PRINTED

Visit www.enstromhelicopter.com for instructions to order an original manual and to register for email notification updates.

Figure 7-10

ITEM NUMBER	PART NUMBER	DESCRIPTION	QTY. PER ASSY.	MODELS AFFECTED								
				F28A	280	F28C	280C	F28F	280F	280FX		
1	28-20100-7	Stabilizer LH	1	X		X		X				
2	28-20100-6	Stabilizer RH	1	X		X		X				
3	AN3-20A	Bolt	4	X		X		X				
4	AN960-10L	Washer	11	X		X		X				
5	AN365-1032A	Nut	5	X		X		X				
6	28-11221-1	Bracket LH	1	X		X		X				
7	28-11221-2	Bracket RH	1	X		X		X				
8	AN3-17A	Bolt	2	X		X		X				
9	AN960-10	Washer	12	X		X		X				
12	AN525-832R8	Screw	9	X		X		X				
13	28-11222-1	Stabilizer Spar	1	X		X		X				
14	28-11218-1	Stinger Tube	1	X	X	X	X	X	X	X		
15	AN502-10-10	Screw	6	X	X	X	X	X	X	X		
17	28-11217-1	Clamp	1	X	X	X	X	X	X	X		
18	AN4-21A	Bolt	4	X	X	X	X	X	X	X		
19	AN960-416L	Washer	12	X	X	X	X	X	X	X		
20	AN365-428A	Nut	4	X	X	X	X	X	X	X		
21	28-11215-1	Clamp Mount	1	X	X	X	X	X	X	X		
22	AN470AD4-6	Rivet	7	X	X	X	X	X	X	X		
23	AN3-5A	Bolt	3	X	X	X	X	X	X	X		
27	28-17201-1	Tail Rotor Guard	1	X		X		X		X		
28	AN4-20A	Bolt	1	X	X	X	X	X	X	X		
29	AN4-22A	Bolt	1	X		X		X		X		
30	AN3-16A	Bolt	1	X	X	X	X	X	X	X		
31	28-17205-1	Clamp	1	X		X		X		X		
32	NAS-1368-N8A	Grommet	2	X	X	X	X	X	X	X		
33	28-20107-11	Placard (Red)	2	X		X		X		X		
33a	28-20107-13	Placard (White)	2	X		X		X		X		
34	AN526-832R8	Screw	2	X	X	X	X	X	X	X		
35	AN960-8L	Washer	2	X	X	X	X	X	X	X		

UNCONTROLLED COPY WHEN DOWNLOADED OR PRINTED
Visit www.enstromhelicopter.com for instructions to order an original manual and to register for email notification updates.

UNCONTROLLED COPY WHEN DOWNLOADED OR PRINTED

Visit www.enstromhelicopter.com for instructions to order an original manual and to register for email notification updates.

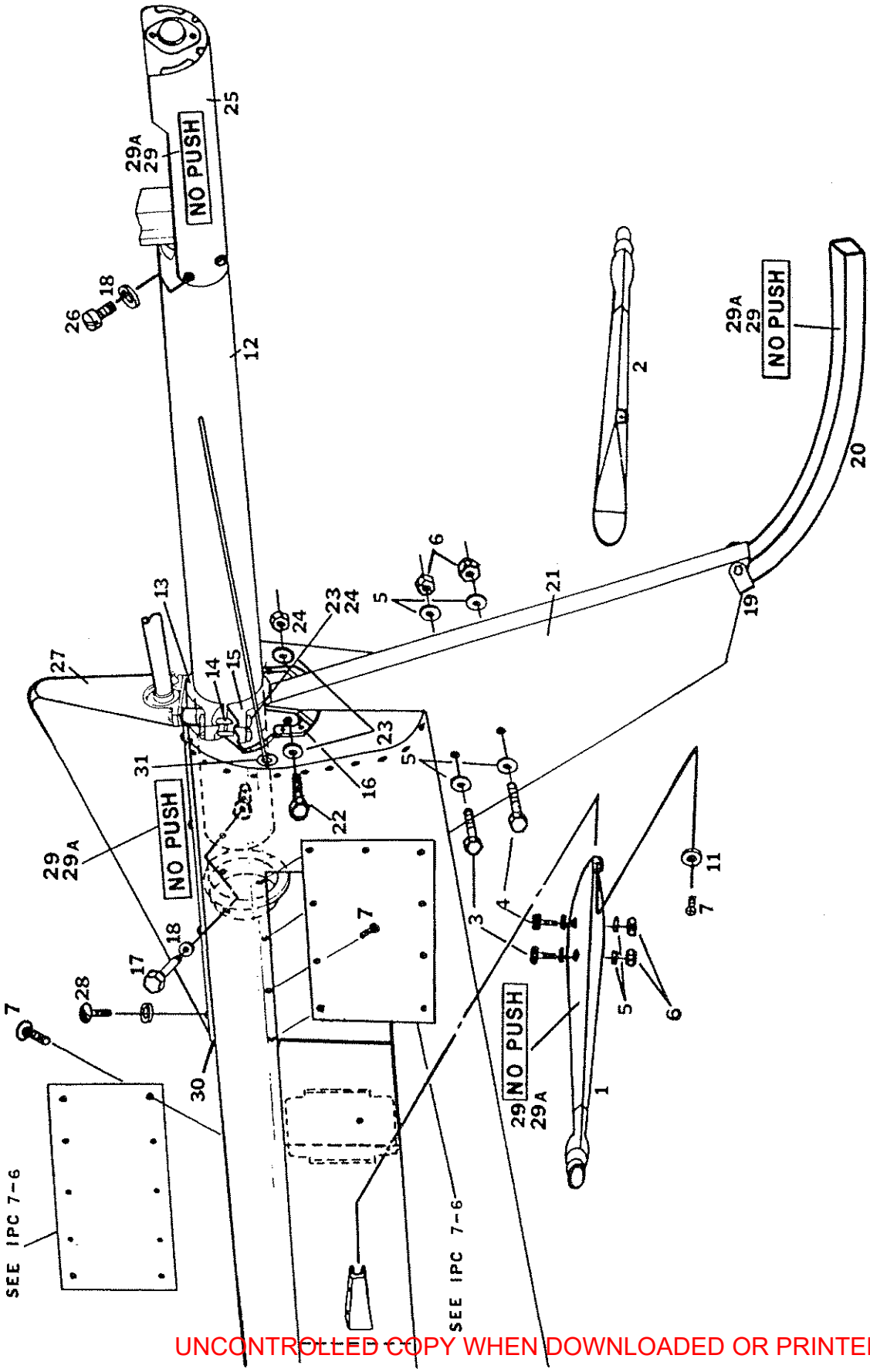

STABILIZER AND TAIL CONE EXTENSION

FIGURE 7-11

UNCONTROLLED COPY WHEN DOWNLOADED OR PRINTED

Visit www.enstromhelicopter.com for instructions to order an original manual and to register for email notification updates.

UNCONTROLLED COPY WHEN DOWNLOADED OR PRINTED

Visit www.enstromhelicopter.com for instructions to order an original manual and to register for email notification updates.

Figure 7-11

ITEM NUMBER	PART NUMBER	DESCRIPTION	QTY. PER ASSY.	MODELS AFFECTED								
				F28A	280	F28C	280C	F28F	280F	280FX		
1	280-200000-1	Stabilizer LH	1		X		X		X			
2	280-200000-2	Stabilizer RH	1		X		X		X			
3	AN3-16A	Bolt	3		X		X		X			
4	AN3-17A	Bolt	3		X		X		X			
5	AN960D10L	Washer	12		X		X		X			
6	AN365-1032A	Nut	6		X		X		X			
7	AN526-832R8	Screw	21		X		X		X			
11	AN960-8L	Washer	10		X		X		X			
12	28-11218-1	Stinger Tube	1	X	X	X	X	X	X	X		
13	28-11217-1	Clamp	1	X	X	X	X	X	X	X		
14	AN4-21A	Bolt	4	X	X	X	X	X	X	X		
15	28-11215-1	Clamp	1	X	X	X	X	X	X	X		
16	AN470AD4-6	Rivet	7	X	X	X	X	X	X	X		
17	AN3-5A	Bolt	3	X	X	X	X	X	X	X		
18	AN960-10L	Washer	9	X	X	X	X	X	X	X		
19	280-201000-41	Strap	1		X		X		X			
20	280-201000-33	Extension Tube	1		X		X		X			
21	280-201000-1	Stabilizer	1		X		X		X			
22	AN4-20A	Bolt	1	X	X	X	X	X	X	X		
23	AN960-416L	Washer	10	X	X	X	X	X	X	X		
24	AN365-428A	Nut	5	X	X	X	X	X	X	X		
25	280-210002-1	Light Support	1		X		X		X			
26	AN502-10-10	Screw	6	X	X	X	X	X	X	X		
27	280-201002-11	Stabilizer	1		X		X		X			
28	AN525-832R8	Screw	8		X		X		X			
29	28-20107-11	Placard (Red)	7		X		X		X			
29a	28-20107-13	Placard (White)	7		X		X		X			
30	4508-1	Foam Tape	AR		X		X		X			
31	NAS-1368-N8A	Grommet	2	X	X	X	X	X	X	X		

UNCONTROLLED COPY WHEN DOWNLOADED OR PRINTED
Visit www.enstromhelicopter.com for instructions to order an original manual and to register for email notification updates

UNCONTROLLED COPY WHEN DOWNLOADED OR PRINTED

Visit www.enstromhelicopter.com for instructions to order an original manual and to register for email notification updates.

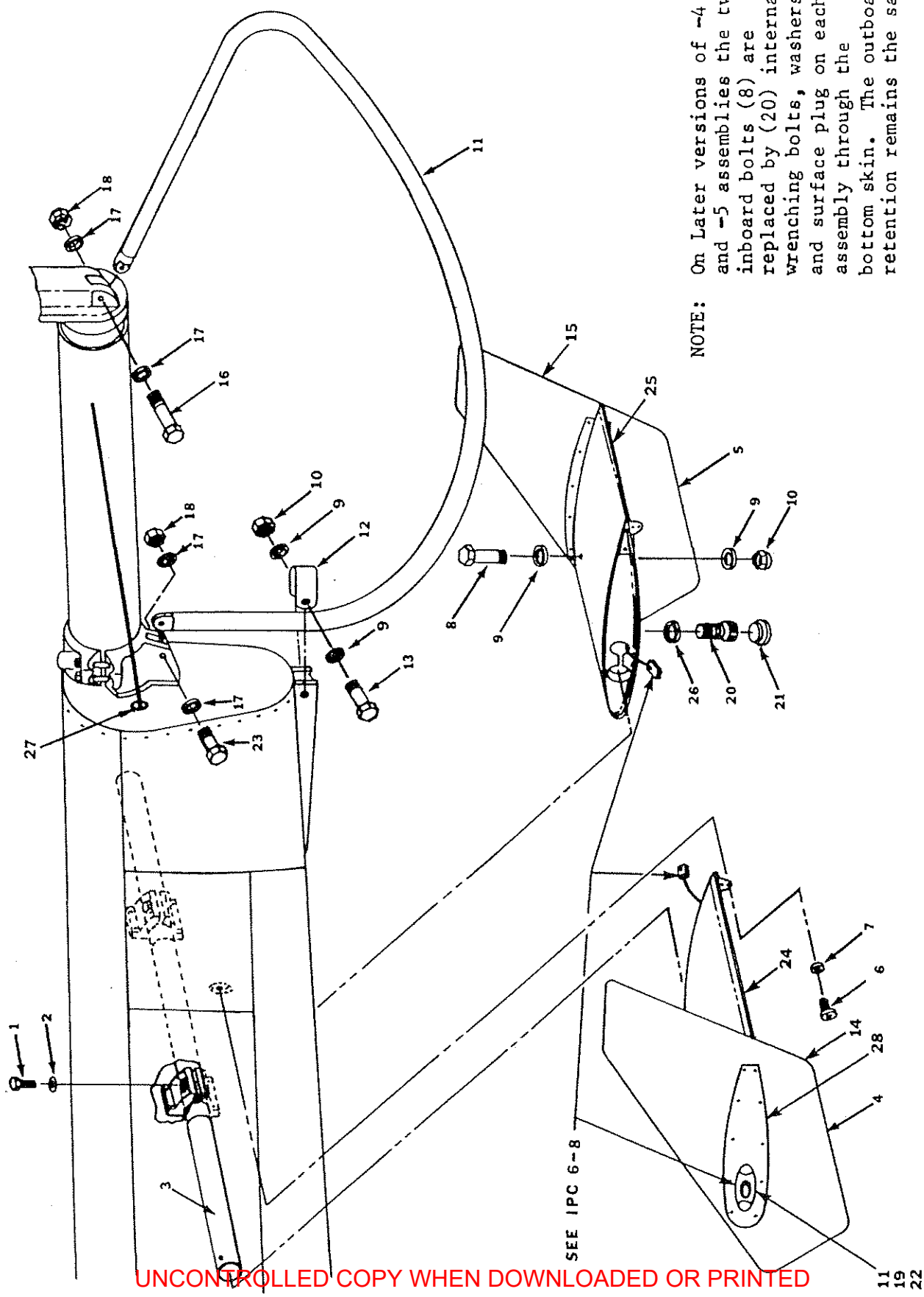

STABILIZER & TAIL CONE EXTENSION

FIGURE 7-12

UNCONTROLLED COPY WHEN DOWNLOADED OR PRINTED

Visit www.enstromhelicopter.com for instructions to order an original manual and to register for email notification updates.

UNCONTROLLED COPY WHEN DOWNLOADED OR PRINTED

Visit www.enstromhelicopter.com for instructions to order an original manual and to register for email notification updates.

Figure 7-12

ITEM NUMBER	PART NUMBER	DESCRIPTION	QTY. PER ASSY.	MODELS AFFECTED								
				F28A	280	F28C	280C	F28F	280F	280FX		
1	NK4-7A	Bolt	2					X		X		
2	AN960PD416	Washer	2					X		X		
3	28-11222-15	Spar	1					X		X		
4	28-20112-1	Vert. Stab. L.H.	1					X		X		
5	28-20112-2	Vert. Stab. R.H.	1					X		X		
6	AN526-832R8	Screw	2	X	X	X	X	X	X	X		
7	AN960-8L	Washer	2	X	X	X	X	X	X	X		
8	AN3-20A	Bolt	2					X		X		
9	AN960-10L	Washer	6					X		X		
10	AN365-1032A	Nut	3					X		X		
11	AN525-1032R12	Screw	20					X		X		
12	28-17205-1	Clamp	1	X		X		X		X		
13	AN3-16A	Bolt	1	X		X		X		X		
14	28-20119-1	Stabilizer Instal. L.H.	1					X		X		
*15	28-20119-2	Stabilizer Instal. R.H.	1					X		X		
16	AN4-22A	Bolt	1	X		X		X		X		
17	AN960-416L	Washer	4	X		X		X		X		
18	AN365-428A	Nut	2	X		X		X		X		
19	AN960PD10L	Washer	40					X		X		
20	MS16998-44	Cap Screw	4					X		X		
21	8PF-1/2	Cap Plug	4					X		X		
22	AN364-1032A	Nut	20					X		X		
23	AN4-20A	Bolt	1	X		X		X		X		
24	28-20111-1	Horiz. Stab. L.H.	1					X		X		
25	28-20111-2	Horiz. Stab. R.H.	1					X		X		
26	AN960-10	Washer	4					X		X		
27	NAS-1368-N8A	Grommet	2	X		X		X		X		
28	28-20116-11	Plate	2					X		X		

UNCONTROLLED COPY WHEN DOWNLOADED OR PRINTED
Visit www.enstromhelicopter.com for instructions to order an original manual and to register for email notification updates.

*Complete Stabilizer Assemblies

UNCONTROLLED COPY WHEN DOWNLOADED OR PRINTED

Visit www.enstromhelicopter.com for instructions to order an original manual and to register for email notification updates.

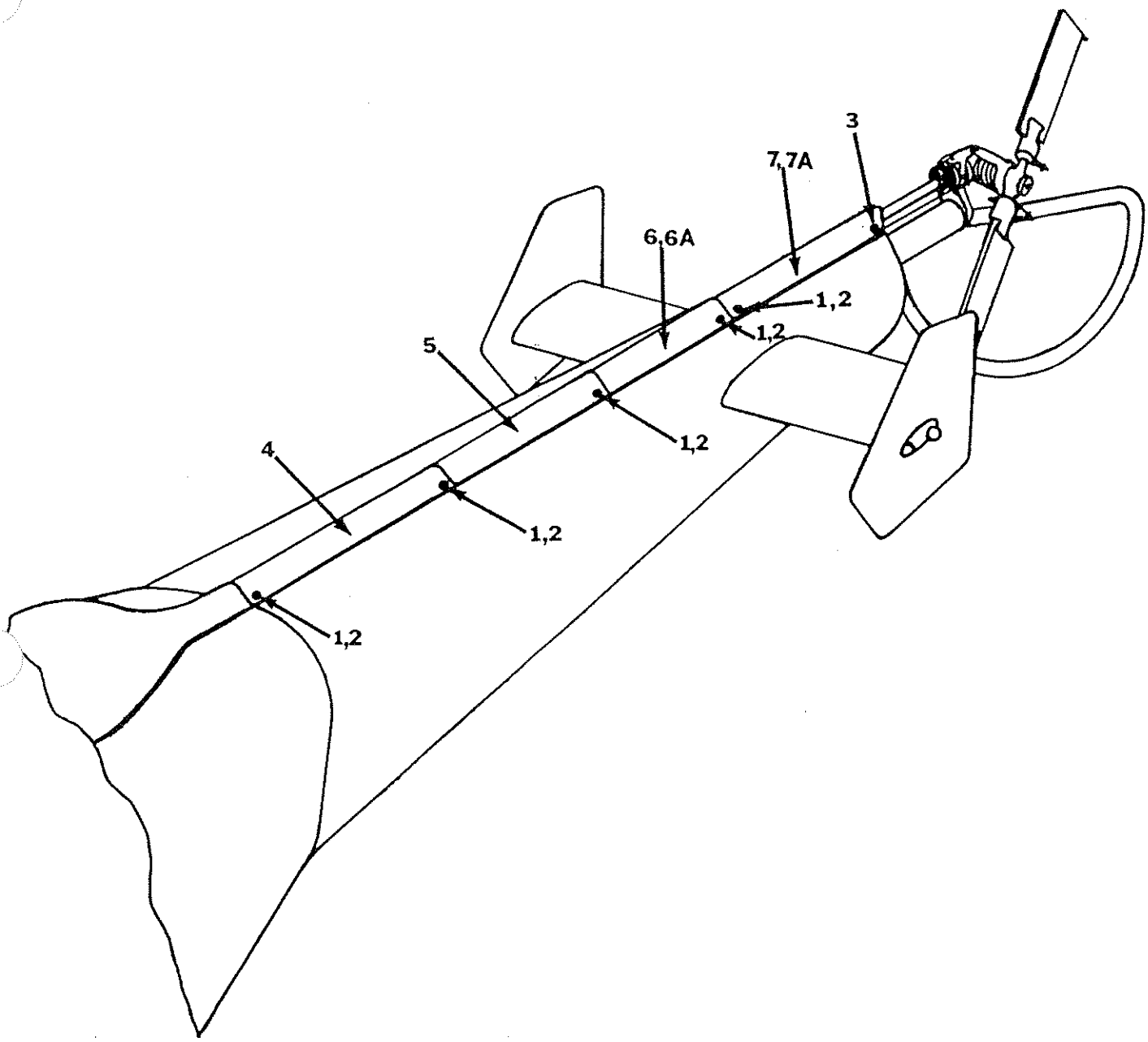

TAIL ROTOR DRIVE SHAFT COVER

FIGURE 7-12A

UNCONTROLLED COPY WHEN DOWNLOADED OR PRINTED

Visit www.enstromhelicopter.com for instructions to order an original manual and to register for email notification updates.

UNCONTROLLED COPY WHEN DOWNLOADED OR PRINTED

Visit www.enstromhelicopter.com for instructions to order an original manual and to register for email notification updates.

Figure 7-12A

ITEM NUMBER	PART NUMBER	DESCRIPTION	QTY. PER ASSY.	MODELS AFFECTED								
				F28A	280	F28C	280C	F28F	280F	280FX		
1	82-11-120-16	Screw - Oval Hd.	6							X		
2	82-32-101-20	Retainer	6							X		
3	AN525-10R8	Screw	2							X		
4	28-11239-1	Cover Assembly	1							X		
5	28-11239-3	Cover Assembly	1							X		
6	28-11239-5	Cover Assembly	1							X		
*6a	28-11239-9	Cover Assembly	1							X		
7	28-11239-7	Cover Assembly	1							X		
**7a	28-11239-101	Cover Assembly	1							X		

*Replaces Item 6
**Replaces Item 7

UNCONTROLLED COPY WHEN DOWNLOADED OR PRINTED
Visit www.enstromhelicopter.com for instructions to order an original manual and to register for email notification updates.

UNCONTROLLED COPY WHEN DOWNLOADED OR PRINTED

Visit www.enstromhelicopter.com for instructions to order an original manual and to register for email notification updates.

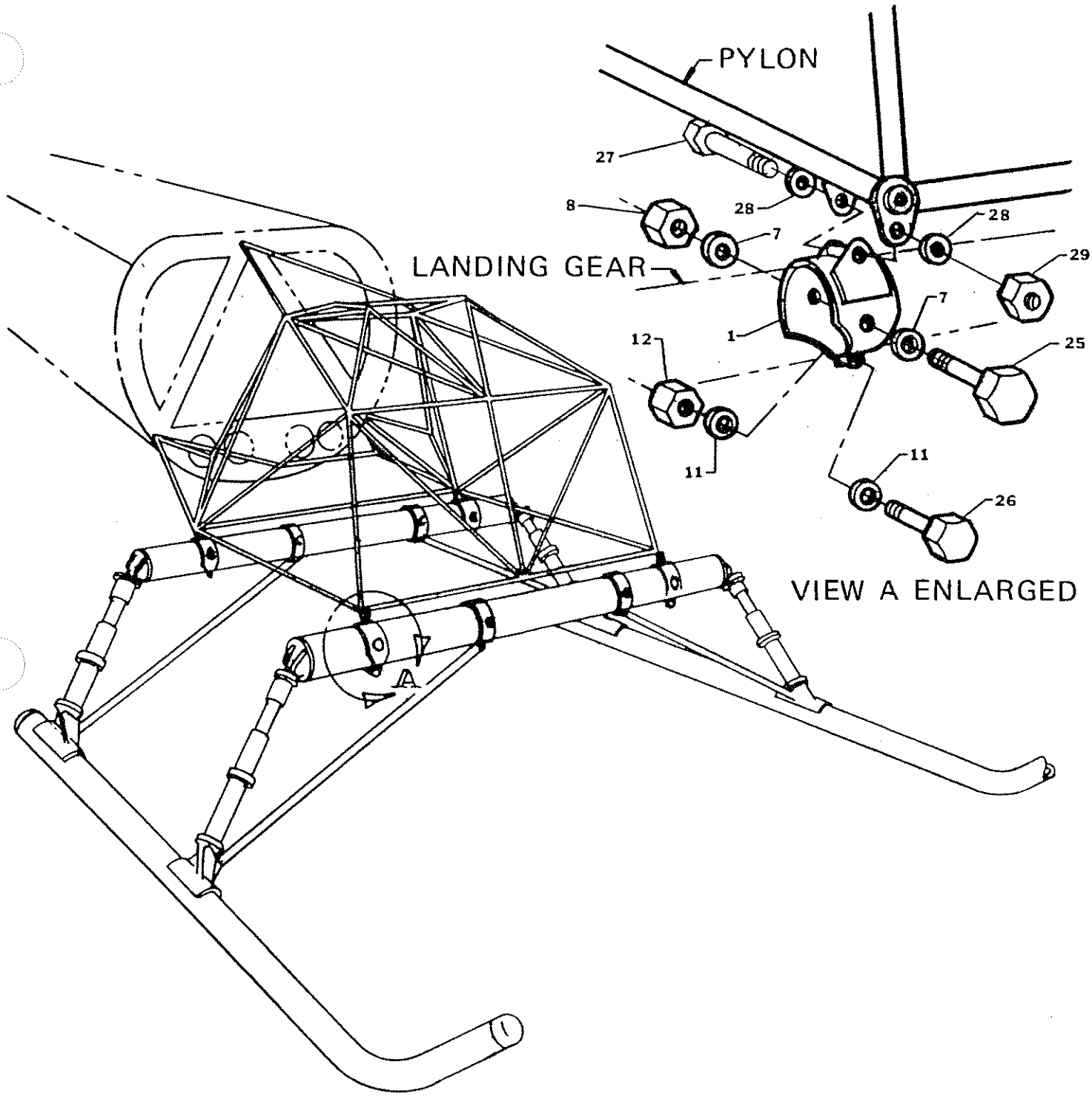

PYLON ASSEMBLY TO LANDING GEAR
FIGURE 7-13

UNCONTROLLED COPY WHEN DOWNLOADED OR PRINTED
Visit www.enstromhelicopter.com for instructions to order an original manual and to register for email notification updates.

UNCONTROLLED COPY WHEN DOWNLOADED OR PRINTED

Visit www.enstromhelicopter.com for instructions to order an original manual and to register for email notification updates.

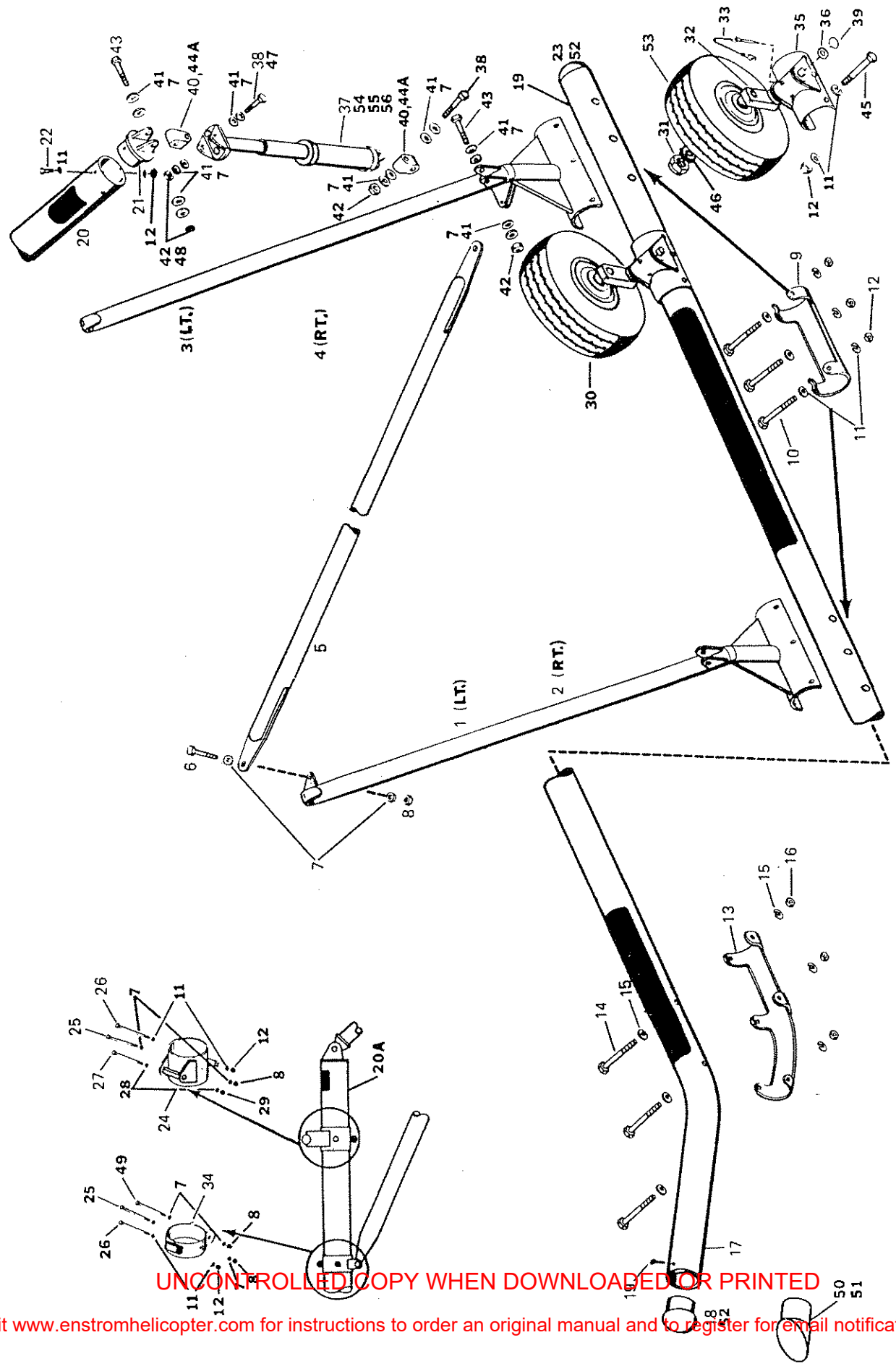

LANDING GEAR ASSEMBLY
FIGURE 7-14

UNCONTROLLED COPY WHEN DOWNLOADED OR PRINTED
Visit www.enstromhelicopter.com for instructions to order an original manual and to register for email notification updates.

UNCONTROLLED COPY WHEN DOWNLOADED OR PRINTED

Visit www.enstromhelicopter.com for instructions to order an original manual and to register for email notification updates.

Figure 7-13 & 7-14

ITEM NUMBER	PART NUMBER	DESCRIPTION	QTY. PER ASSY.	MODELS AFFECTED								
				F28A	280	F28C	280C	F28F	280F	280FX		
1	28-17132-1	Left Front Leg	1	X	X	X	X	X	X	X		
2	28-17132-2	Right Front Leg	1	X	X	X	X	X	X	X		
3	28-17132-3	Left Rear Leg	1	X	X	X	X	X	X	X		
4	28-17132-4	Right Rear Leg	1	X	X	X	X	X	X	X		
5	28-17124-1	Drag Strut	2	X	X	X	X	X	X	X		
6	AN5-6A	Bolt	4	X	X	X	X	X	X	X		
7	AN960-516L	Washer	AR	X	X	X	X	X	X	X		
8	AN365-524A	Nut	4	X	X	X	X	X	X	X		
9	28-17111-1	Wear Plate	4	X	X	X	X	X	X	X		
10	AN4-31A	Bolt	12	X	X	X	X	X	X	X		
11	AN960-416L	Washer	24	X	X	X	X	X	X	X		
12	AN365-428A	Nut	12	X	X	X	X	X	X	X		
13	28-17104-1	Forward Wear Plate	2	X	X	X	X	X	X	X		
14	AN3-27A	Bolt	12	X	X	X	X	X	X	X		
15	AN960-10L	Washer	24	X	X	X	X	X	X	X		
16	AN365-1032A	Nut	12	X	X	X	X	X	X	X		
17	28-17102-3	Skid	2	X	X	X	X	X	X	X		
18	28-17106-1	Skid Plug Forward	2	X	X	X	X	X	X			
19	AN530-6-6	Screw	4	X	X	X	X	X	X	X		
20	28-17122-3	Cross Tube	2	X	X	X	X	X	X	X		
20a	28-17122-1	Cross Tube Assembly	2	X	X	X	X	X	X	X		
21	28-17129-1	End Fitting	4	X	X	X	X	X	X	X		
22	AN4-34A	Bolt	8	X	X	X	X	X	X	X		
23	28-17106-2	Skid Plug Aft	2	X	X	X	X	X	X			
24	28-17101-1	Skid Clamp	4	X	X	X	X	X	X	X		
25	AN5-35A	Bolt	4	X	X	X	X	X	X	X		
26	AN4-14A	Bolt	4	X	X	X	X	X	X	X		
27	28-17150-1	Bolt	4	X	X	X	X	X	X	X		
28	AN960-616	Washer	8	X	X	X	X	X	X	X		
29	AN364-624A	Nut	4	X	X	X	X	X	X	X		
30	28-17008-903	Wheel & Axle Install.	2	X	X	X	X	X	X	X		
31	AN364-1216A	Nut	2	X	X	X	X	X	X	X		
32	28-17002-11	Axle	2	X	X	X	X	X	X	X		

UNCONTROLLED COPY WHEN DOWNLOADED OR PRINTED

Visit www.enstromhelicopter.com for instructions to order an original manual and to register for email notification updates.

Figure 7-13 & 7-14 (Cont.)

ITEM NUMBER	PART NUMBER	DESCRIPTION	QTY. PER ASSY.	MODELS AFFECTED								
				F28A	280	F28C	280C	F28F	280F	280FX		
33	BLDS4-13W/LT	Detent Pin	2	X	X	X	X	X	X	X		
34	28-17121-1	Clamp	4	X	X	X	X	X	X	X		
35	28-17001-1	Bracket Wheel Assy	2	X	X	X	X	X	X	X		
36	28-17004-1	Washer	2	X	X	X	X	X	X	X		
37	28-17148-904	Oleo Assembly	4	X	X	X	X	X	X	X		
38	AN5-16A	Bolt	8	X	X	X	X	X	X			
39	5108-100PP	Snap Ring	2	X	X	X	X	X	X	X		
40	28-17123-1	Link Standard	8	X	X	X	X	X	X	X		
41	AN960-516	Washer	AR	X	X	X	X	X	X	X		
41a	AN960-516L	Washer	AR	X	X	X	X	X	X	X		
42	AN365-524A	Nut	8	X	X	X	X	X	X			
43	AN5-17A	Bolt	8	X	X	X	X	X	X			
44	28-17306-1	Link Float Ships Opt.	8	X	X	X	X	X	X			
44a	28-17306-1	Link Float Ships Opt.	4							X		
45	AN4-27A	Bolt	6	X	X	X	X	X	X	X		
46	AN960-C1216	Washer	AR	X	X	X	X	X	X	X		
47	28-17135-11	Bolt	8							X		
48	AN364-524A	Lock Nut	8							X		
49	AN5-21A	Bolt	4	X	X	X	X	X	X	X		
50	ECD-085-3 Fwd.	Cap Alt. For Item (18)	2					OPT	OPT	X		
51	ECD-085-1 Aft.	Cap Ref. For Item (18)	2					OPT	OPT	X		
52	28-17159-11	Cap Rep. For Item (18)	4	X	X	X	X	X	X			
53	ECD-083-1	Tire & Wheel Assy.	2	X	X	X	X	X	X	X		
54	28-17148-903	Oleo Assy. (280FX)	4							X		
55	28-17148-904	Oleo Assy. (Rep)	4	X	X	X	X	X	X			
56	28-17148-7	Oleo Assy. (Floats)	4	X	X	X	X	X	X	X		

UNCONTROLLED COPY WHEN DOWNLOADED OR PRINTED

Visit www.enstromhelicopter.com for instructions to order an original manual and to register for email notification updates.

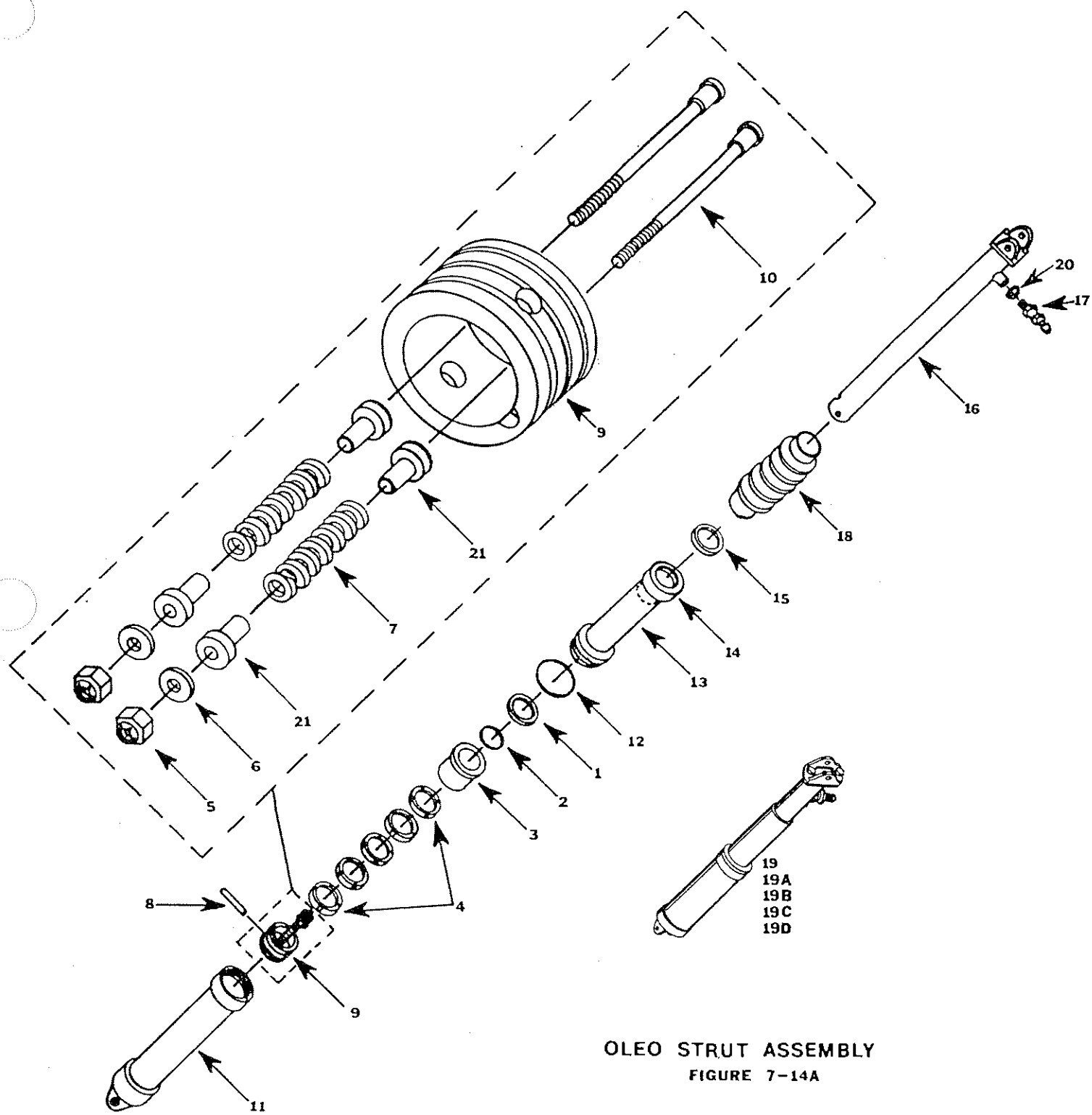

OLEO STRUT ASSEMBLY
FIGURE 7-14A

UNCONTROLLED COPY WHEN DOWNLOADED OR PRINTED
Visit www.enstromhelicopter.com for instructions to order an original manual and to register for email notification updates.

UNCONTROLLED COPY WHEN DOWNLOADED OR PRINTED

Visit www.enstromhelicopter.com for instructions to order an original manual and to register for email notification updates.

Figure 7-14A

ITEM NUMBER	PART NUMBER	DESCRIPTION	QTY. PER ASSY.	MODELS AFFECTED								
				F28A	280	F28C	280C	F28F	280F	280FX		
1	8-218-N300-9	Back-Up Ring	1	X	X	X	X	X	X	X		
2	2-218	O-Ring	1	X	X	X	X	X	X	X		
3	28-17149-1	Spacer	1	X	X	X	X	X	X	X		
4	28-17151-1	Rebound Rings	5	X	X	X	X	X	X	X		
5	AN365-632A	Nut	2	X	X	X	X	X	X	X		
6	AN960-6	Washers	2	X	X	X	X	X	X	X		
7	28-17155-1	Spring	2	X	X	X	X	X	X	X		
8	28-17147-3	Pin	1	X	X	X	X	X	X	X		
9	28-17145-1	Piston	1	X	X	X	X	X	X	X		
10	28-17157-1	Shaft Valve	2	X	X	X	X	X	X	X		
11	28-17140-1	Cylinder	1	X	X	X	X	X	X	X		
12	2-131	O-Ring	1	X	X	X	X	X	X	X		
13	28-17144-1	Housing Seal Assembly	1	X	X	X	X	X	X	X		
14	28-17153-1	Guide Bushing	1	X	X	X	X	X	X	X		
**14a	28-17153-13	Guide Bushing	1					X		X		
15	28-17154-1	Wiper	1	X	X	X	X	X	X	X		
**15a	D-1250	Wiper	1					X		X		
16	28-17146-1	Piston Shaft Assembly	1	X	X	X	X	X	X	X		
17	MS28889-2	Valve	1	X	X	X	X	X	X	X		
18	28-17158-1	Boot	1	X	X	X	X	X	X			
19	28-17148-1	Oleo Assembly	1	X	X	X	X	X	X	X		
19a	28-17148-2	Oleo Assembly (Floats)	1	X	X	X	X	X	X			
19b	28-17148-3	Oleo Assembly	1							X		
*19c	28-17148-5	Oleo Assembly	1	X	X	X	X	X	X			
19d	28-17148-7	Oleo Assembly (Floats)	1	X	X	X	X	X	X	X		
20	2-111	O-Ring	1	X	X	X	X	X	X	X		
21	28-17156-1	Valve Piston	4	X	X	X	X	X	X	X		

UNCONTROLLED COPY WHEN DOWNLOADED OR PRINTED

*Preferred Replacement Assy. Except for 280FX

**Preferred Replacement

Visit www.vansairforce.com for instructions to order original manual and to register for email notification updates.

UNCONTROLLED COPY WHEN DOWNLOADED OR PRINTED

Visit www.enstromhelicopter.com for instructions to order an original manual and to register for email notification updates.

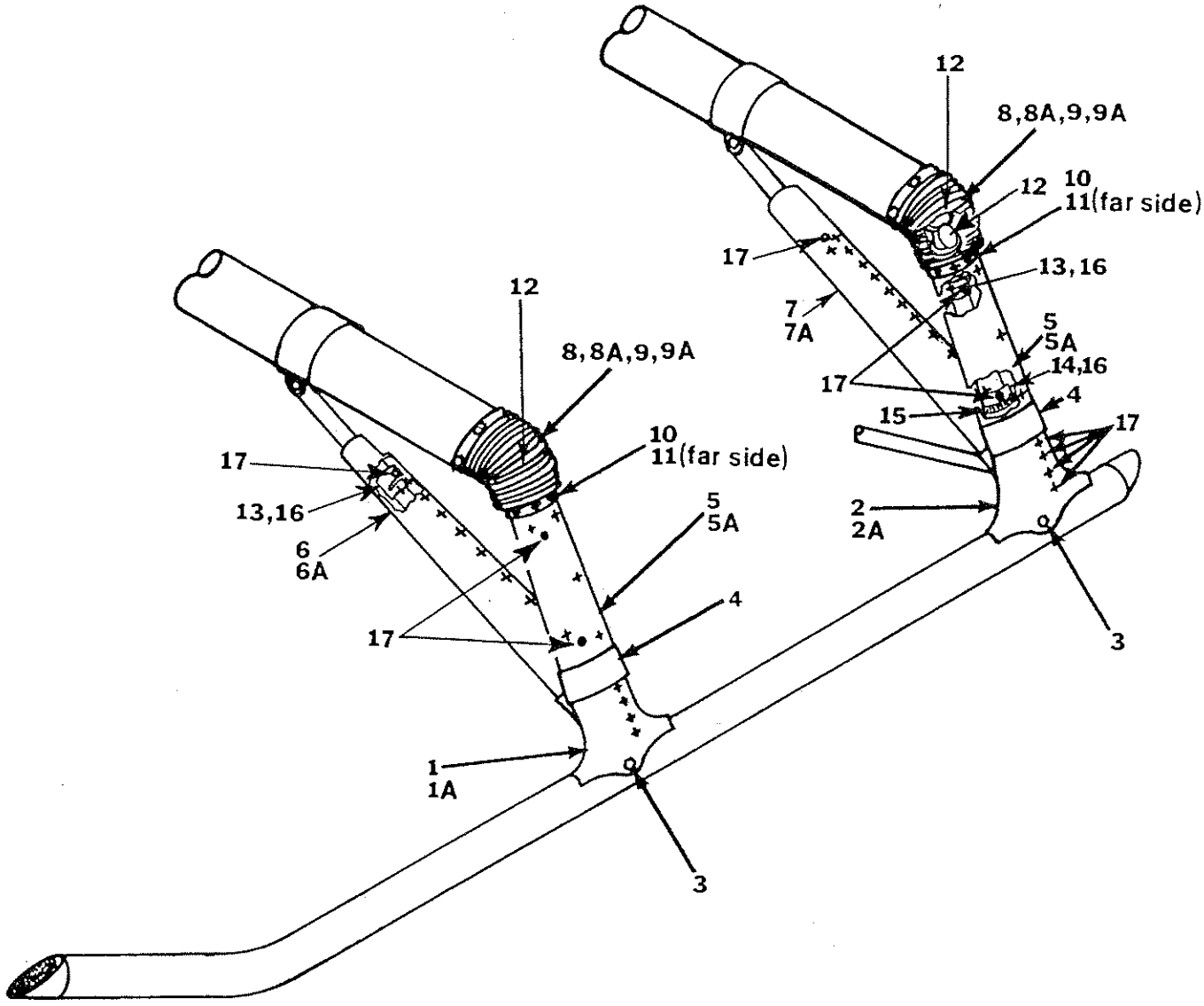

+ DESIGNATES 17 ON FAR SIDE

LANDING GEAR FAIRINGS

FIGURE 7-14B

UNCONTROLLED COPY WHEN DOWNLOADED OR PRINTED

Visit www.enstromhelicopter.com for instructions to order an original manual and to register for email notification updates.

UNCONTROLLED COPY WHEN DOWNLOADED OR PRINTED

Visit www.enstromhelicopter.com for instructions to order an original manual and to register for email notification updates.

Figure 7-14B

ITEM NUMBER	PART NUMBER	DESCRIPTION	QTY. PER ASSY.	MODELS AFFECTED								
				F28A	280	F28C	280C	F28F	280F	280FX		
1	28-17141-1	Fairing L.H.	1							X		
1a	28-17141-2	Fairing R.H.	1							X		
2	28-17141-3	Fairing L.H.	1							X		
2a	28-17141-4	Fairing R.H.	1							X		
3	AN4-31A	Bolt	4							X		
4	28-17120-11	Sleeve	4							X		
5	28-17108-1	Fairing L.H.	2							X		
5a	28-17108-2	Fairing R.H.	2							X		
6	28-17139-3	Fairing - Diagonal L.H.	1							X		
6a	28-17139-4	Fairing - Diagonal R.H.	1							X		
7	28-17139-1	Fairing - Diagonal L.H.	1							X		
7a	28-17139-2	Fairing - Diagonal R.H.	1							X		
8	28-17119-11	Boot L.H.	2							X		
8a	28-17119-12	Boot R.H.	2							X		
*9	28-17119-13	Boot L.H.	2							X		
*9a	28-17119-14	Boot R.H.	2							X		
10	28-17161-11	Strap	4							X		
11	28-17162-11	Washer	4							X		
12	28-17138-1	Support	4							X		
13	28-17113-1	Clamp	8							X		
14	28-17143-11	Clamp	4							X		
15	QS100-M28S	Clamp	4							X		
16	A1787-8Z-1	Tinnerman Nut	AR							X		
17	8 x 1/2	Screw	AR							X		

*Use With Oleo Struts & Strut Extenders Top Only

UNCONTROLLED COPY WHEN DOWNLOADED OR PRINTED

Visit www.enstromhelicopter.com for instructions to order an original manual and to register for email notification updates.

UNCONTROLLED COPY WHEN DOWNLOADED OR PRINTED

Visit www.enstromhelicopter.com for instructions to order an original manual and to register for email notification updates.

SECTION 8

FLIGHT CONTROLS

TABLE OF CONTENTS

	Cover Page	8-1
	Table of Contents	8-1
8-1	Lower Swashplate Assembly	8-2
8-2	Lower Swashplate Installation	8-3
8-3	Lower Swashplate Control Rod Attachment	8-5
8-3A	Upper Swashplate Assembly & Control Attachment	8-6
8-4	Main Rotor Pitch Change Controls	8-7
8-5	Cyclic Control Assembly	8-8
8-5A	Cyclic Control Stick Installation	8-18
8-6	Trim Spring Mechanical Installation	8-21
8-6A	Lateral and Longitudinal Bias Spring Installation	8-23
8-7	Lateral Trim with Bias Spring Installation	8-25
8-8	Trim Actuator Capsule Installation	8-27
8-9	Lateral Trim Assembly	8-29
8-10	Longitudinal Trim Assembly	8-32
8-11	Collective Trim, Spring Capsule	8-35
8-12	Co-Pilots Collective Assembly	8-37
8-13	Pilots Collective Assembly	8-39
8-14	Collective Control System Torque Shaft Assembly	8-41
8-15	Collective Control System Torque Shaft Assembly	8-44
8-16	Collective Control Reversing Bellcrank	8-46
8-16A	Collective Control Push-Pull Rod Attachment	8-47
8-16B	Collective Reversing Bellcrank Pivot	8-48
8-17	Collective Stick Friction Control	8-50

UNCONTROLLED COPY WHEN DOWNLOADED OR PRINTED

Visit www.enstromhelicopter.com for instructions to order an original manual and to register for email notification updates.

INTENTIONALLY LEFT BLANK

UNCONTROLLED COPY WHEN DOWNLOADED OR PRINTED

Visit www.enstromhelicopter.com for instructions to order an original manual and to register for email notification updates.

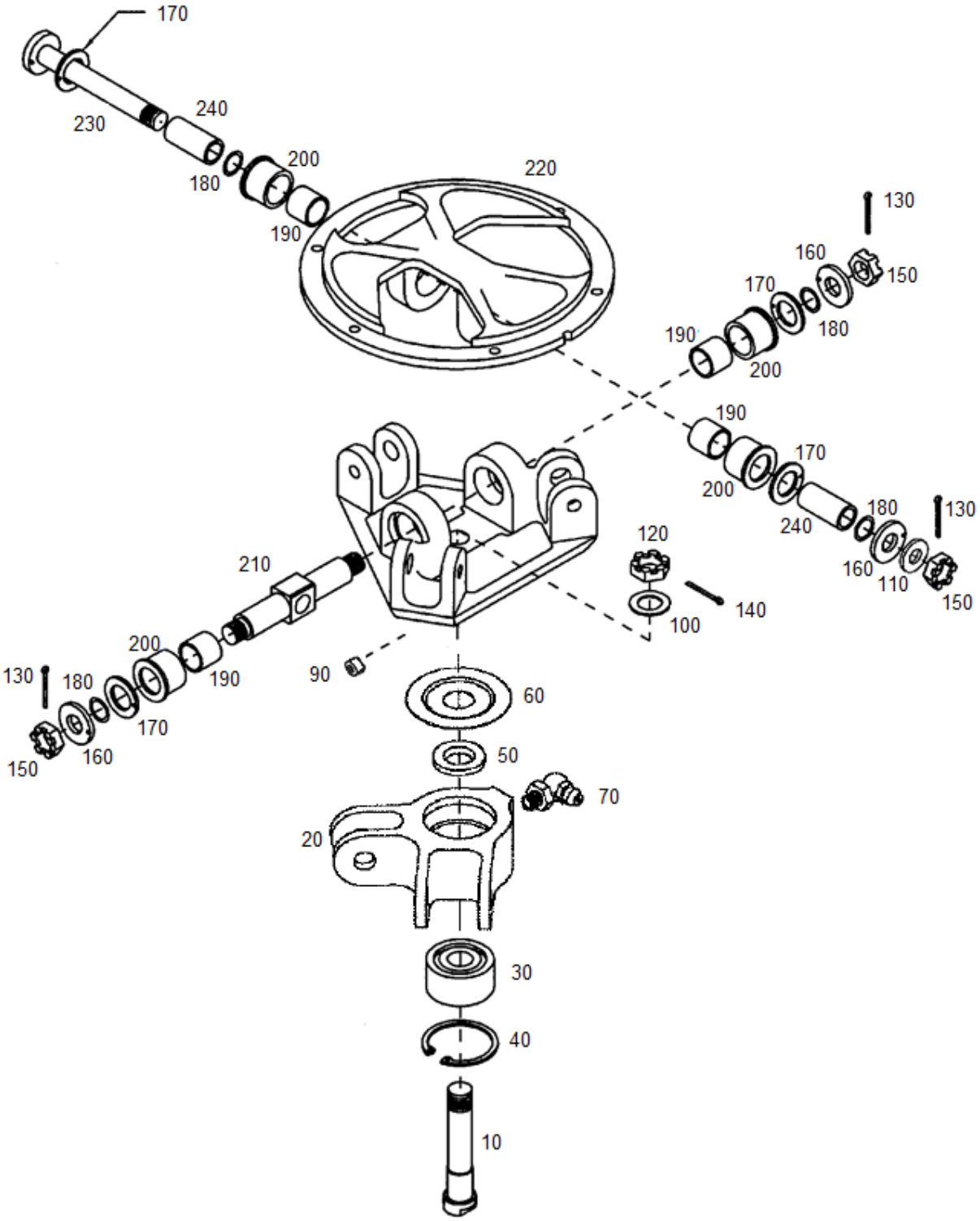

FIGURE 8-1. LOWER SWASHPLATE ASSEMBLY

UNCONTROLLED COPY WHEN DOWNLOADED OR PRINTED
Visit www.enstromhelicopter.com for instructions to order an original manual and to register for email notification updates.

FIGURE 8-1. LOWER SWASHPLATE ASSEMBLY

ITEM NUMBER	PART NUMBER	DESCRIPTION	QTY PER ASSY	MODELS AFFECTED						
				F-28A	280	F-28C	280C	F-28F	280F	280FX
–▲	28-16101-101	Lower Swashplate Assembly	REF	X	X	X	X	X	X	X
10Δ	28-16123-11	. Bolt	1	X	X	X	X	X	X	X
10Δ	28-16123-1	. Bolt (Superseded by 28-16123-11)	1	X	X	X	X	X	X	X
20	28-16361-1	. Housing	1	X	X	X	X	X	X	X
30	ECD009-11	. Bearing	1	X	X	X	X	X	X	X
40	N5002-125-PP	. Retaining Ring	1	X	X	X	X	X	X	X
50	28-16228-1	. Spacer	1	X	X	X	X	X	X	X
60	28-16387-1	. Slinger	1	X	X	X	X	X	X	X
70	1911-B1	. Lube Fitting	1	X	X	X	X	X	X	X
70	1637-B	. Lube Fitting (Superseded by 1911-B1)	1	X	X	X	X	X	X	X
80*	28-16119-5	. Universal Housing (Lower) (Preferred Part)	1	X	X	X	X	X	X	X
80*	28-16119-3	. Universal Housing (Lower) (Alternate)	1	X	X	X	X	X	X	X
90	MS18066-14	. Set Screw (Used with 28-16119-5)	1	X	X	X	X	X	X	X
100	NAS1149F0732P	. Washer	1	X	X	X	X	X	X	X
100	AN960-716L	. Washer (Alternate)	1	X	X	X	X	X	X	X
110	NAS1149F0632P	. Washer	1	X	X	X	X	X	X	X
110	AN960-616L	. Washer (Alternate)	1	X	X	X	X	X	X	X
120	AN320-7	. Nut	1	X	X	X	X	X	X	X
120	F12NE4717-070	. Nut (Superseded by AN320-7)	1	X	X	X	X	X	X	X
130	MS24665-300	. Cotter Pin	3	X	X	X	X	X	X	X
140	MS24665-302	. Cotter Pin	1	X	X	X	X	X	X	X
140	AN381-3-16	. Cotter Pin (Superseded by MS24665-302)	4	X	X	X	X	X	X	X
150	AN320-6	. Nut	3	X	X	X	X	X	X	X
160	28-16227-3	. Washer Assembly	3	X	X	X	X	X	X	X
170	28-16263-5	. DU Washer	4	X	X	X	X	X	X	X

Visit www.enstromhelicopter.com for instructions to order an original manual and to register for email notification updates.

FIGURE 8-1. LOWER SWASHPLATE ASSEMBLY

ITEM NUMBER	PART NUMBER	DESCRIPTION	QTY PER ASSY	MODELS AFFECTED						
				F-28A	280	F-28C	280C	F-28F	280F	280FX
180	28-16524-3	. Shim, .020"	A/R	X	X	X	X	X	X	X
180	28-16524-4	. Shim, .015"	A/R	X	X	X	X	X	X	X
180	28-16524-5	. Shim, .005"	A/R	X	X	X	X	X	X	X
180	28-16524-6	. Shim, .003"	A/R	X	X	X	X	X	X	X
180	28-16524-7	. Shim, .002"	A/R	X	X	X	X	X	X	X
180	28-16524-8	. Shim, .001"	A/R	X	X	X	X	X	X	X
190	08DU08	. Bearing	4	X	X	X	X	X	X	X
200	28-16226-5	. Sleeve	4	X	X	X	X	X	X	X
210	28-16223-19	. Shaft	1	X	X	X	X	X	X	X
220♦	28-16116-11	. Universal Housing (Upper)	1	X	X	X	X	X	X	X
220♦	28-16116-1	. Universal Housing (Upper) (Superseded by 28-16116-11)	1	X	X	X	X	X	X	X
230	28-16224-5	. Tie Rod Assembly	1	X	X	X	X	X	X	X
240	28-16225-19	. Spacer	2	X	X	X	X	X	X	X

▲ Available as a remanufactured part (-R).

* Effectivity F-28F S/N 825 – subsequent and 280FX S/N 2135 – subsequent. Retrofittable to F-28F S/N 509 – subsequent and 280FX S/N 2001 – subsequent.

♦ Effectivity F-28F S/N 831 – subsequent and 280FX S/N 2136 – subsequent. Retrofittable to F-28F S/N 509 – subsequent and 280FX S/N 2001 – subsequent.

Δ Effectivity F-28F S/N 833 – subsequent and 280FX S/N 2148 – subsequent. Retrofittable to F-28F S/N 509 – subsequent and 280FX S/N 2001 – subsequent.

UNCONTROLLED COPY WHEN DOWNLOADED OR PRINTED
Visit www.enstromhelicopter.com for instructions to order an original manual and to register for email notification updates.

INTENTIONALLY LEFT BLANK

UNCONTROLLED COPY WHEN DOWNLOADED OR PRINTED
Visit www.enstromhelicopter.com for instructions to order an original manual and to register for email notification updates.

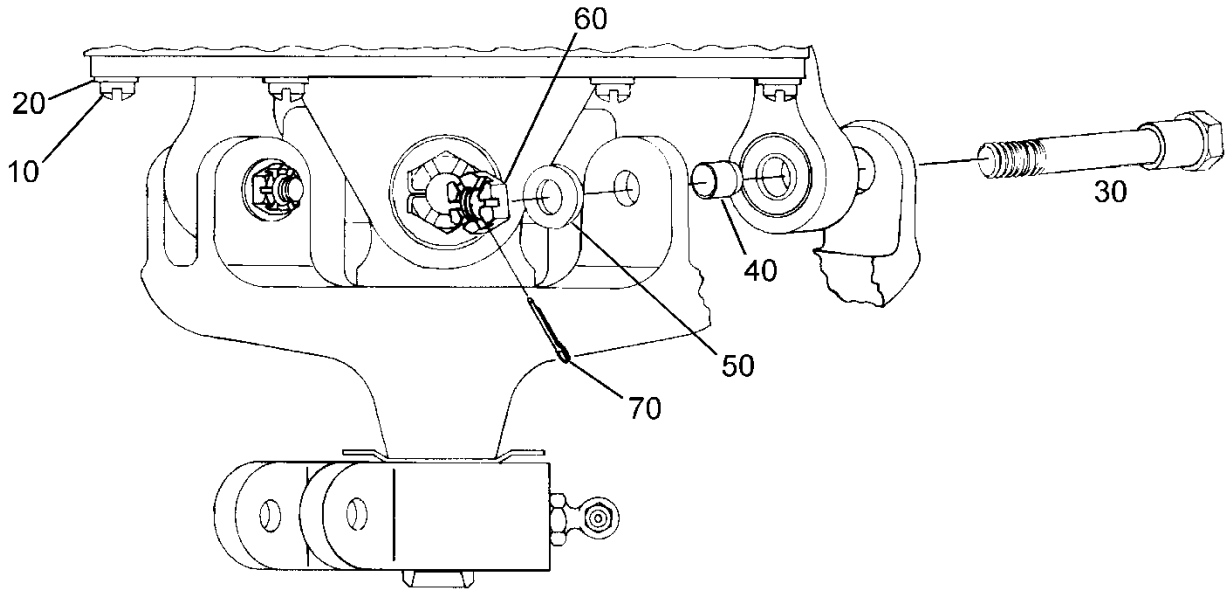

FIGURE 8-2. LOWER SWASHPLATE INSTALLATION

UNCONTROLLED COPY WHEN DOWNLOADED OR PRINTED

Visit www.enstromhelicopter.com for instructions to order an original manual and to register for email notification updates.

FIGURE 8-2. LOWER SWASHPLATE INSTALLATION

ITEM NUMBER	PART NUMBER	DESCRIPTION	QTY PER ASSY	MODELS AFFECTED						
				F-28A	280	F-28C	280C	F-28F	280F	280FX
10	MS20074-304	. Bolt	6	X	X	X	X	X	X	X
10	AN503-10-10	. Screw (Superseded by MS20074-304)	6	X	X	X	X	X	X	X
20	NAS1149F0363P	. Washer	6	X	X	X	X	X	X	X
20	AN960-10	. Washer (Alternate)	6	X	X	X	X	X	X	X
30	28-16129-2	. Bolt	3	X	X	X	X	X	X	X
40	28-16124-1	. Spacer	3	X	X	X	X	X	X	X
50	NAS1149F0432P	. Washer	3	X	X	X	X	X	X	X
50	AN960-416L	. Washer (Alternate)	3	X	X	X	X	X	X	X
60	MS17826-4	. Nut	3	X	X	X	X	X	X	X
60	F12NE4717-048	. Nut (Superseded by MS17826-4)	3	X	X	X	X	X	X	X
70	MS24665-1013	. Cotter Pin	3	X	X	X	X	X	X	X
70	AN381-2-7	. Cotter Pin (Superseded by MS24665-1013)	3	X	X	X	X	X	X	X

UNCONTROLLED COPY WHEN DOWNLOADED OR PRINTED

Visit www.enstromhelicopter.com for instructions to order an original manual and to register for email notification updates.

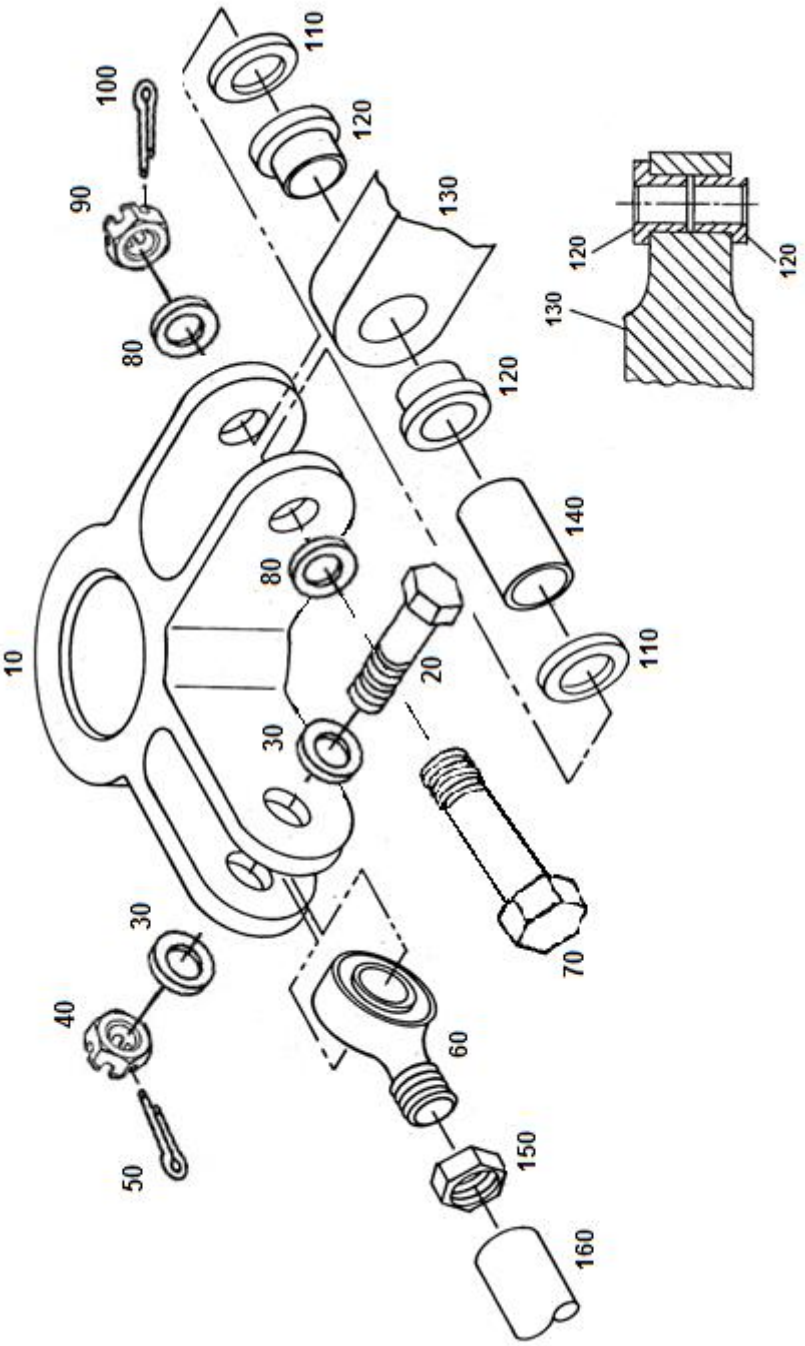

FIGURE 8-3. LOWER SWASHPLATE CONTROL ROD ATTACHMENT

UNCONTROLLED COPY WHEN DOWNLOADED OR PRINTED
Visit www.enstromhelicopter.com for instructions to order an original manual and to register for email notification updates.

FIGURE 8-3. LOWER SWASHPLATE CONTROL ROD ATTACHMENT

ITEM NUMBER	PART NUMBER	DESCRIPTION	QTY PER ASSY	MODELS AFFECTED						
				F-28A	280	F-28C	280C	F-28F	280F	280FX
–	28-16024	Control System	REF	X	X	X	X	X	X	X
10	28-16361-1	. Bearing Housing	1	X	X	X	X	X	X	X
20	NAS6605D13	. Bolt	1	X	X	X	X	X	X	X
20	AN5-12	. Bolt (Superseded by NAS6605D13)	1	X	X	X	X	X	X	X
30	NAS1149F0563P	. Washer	2	X	X	X	X	X	X	X
30	AN960-516	. Washer (Alternate)	2	X	X	X	X	X	X	X
40	MS17825-5	. Nut	1	X	X	X	X	X	X	X
40	F12NE-4753-054	. Nut (Superseded by MS17825-5)	1	X	X	X	X	X	X	X
50	MS24665-152	. Cotter Pin	1	X	X	X	X	X	X	X
50	AN381-2-10	. Cotter Pin (Superseded by MS24665-152)	1	X	X	X	X	X	X	X
60	HMVV-5M	. Rod End	1	X	X	X	X	X	X	X
60	HMVV-5	. Rod End (Superseded by HMVV-5M)	1	X	X	X	X	X	X	X
70	NAS6604D17	. Bolt	1	X	X	X	X	X	X	X
70	AN4-14	. Bolt (Superseded by NAS6604D17)	1	X	X	X	X	X	X	X
80	NAS1149F0463P	. Washer	2	X	X	X	X	X	X	X
80	AN960-416	. Washer (Alternate)	2	X	X	X	X	X	X	X
90	MS17825-4	. Nut	2	X	X	X	X	X	X	X
90	F12NE-4753-048	. Nut (Superseded by MS17825-4)	1	X	X	X	X	X	X	X
100	MS24665-151	. Cotter Pin	1	X	X	X	X	X	X	X
100	AN381-2-8	. Cotter Pin (Superseded by MS24665-151)	1	X	X	X	X	X	X	X
110	ECD050-11	. 1/4 Washer	2	X	X	X	X	X	X	X
110	1/4 Harper	. Washer (Superseded by ECD050-11)	2	X	X	X	X	X	X	X
120	28-16156-1	. Bearing	2	X	X	X	X	X	X	X
130	28-16198-1	. Push-Pull Rod	1	X	X	X	X	X	X	X

UNCONTROLLED COPY WHEN DOWNLOADED OR PRINTED

Visit www.enstromhelicopter.com for instructions to order an original manual and to register for email notification updates.

FIGURE 8-3. LOWER SWASHPLATE CONTROL ROD ATTACHMENT

ITEM NUMBER	PART NUMBER	DESCRIPTION	QTY PER ASSY	MODELS AFFECTED						
				F-28A	280	F-28C	280C	F-28F	280F	280FX
140	28-16219-1	. Spacer	1	X	X	X	X	X	X	X
150	AN316-5R	. Nut	1	X	X	X	X	X	X	X
150	AN316-5	. Nut (Superseded by AN316-5R)	1	X	X	X	X	X	X	X
160	28-16197-1	. Push-Pull Rod	1	X	X	X	X	X	X	X

UNCONTROLLED COPY WHEN DOWNLOADED OR PRINTED
Visit www.enstromhelicopter.com for instructions to order an original manual and to register for email notification updates.

INTENTIONALLY LEFT BLANK

UNCONTROLLED COPY WHEN DOWNLOADED OR PRINTED
Visit www.enstromhelicopter.com for instructions to order an original manual and to register for email notification updates.

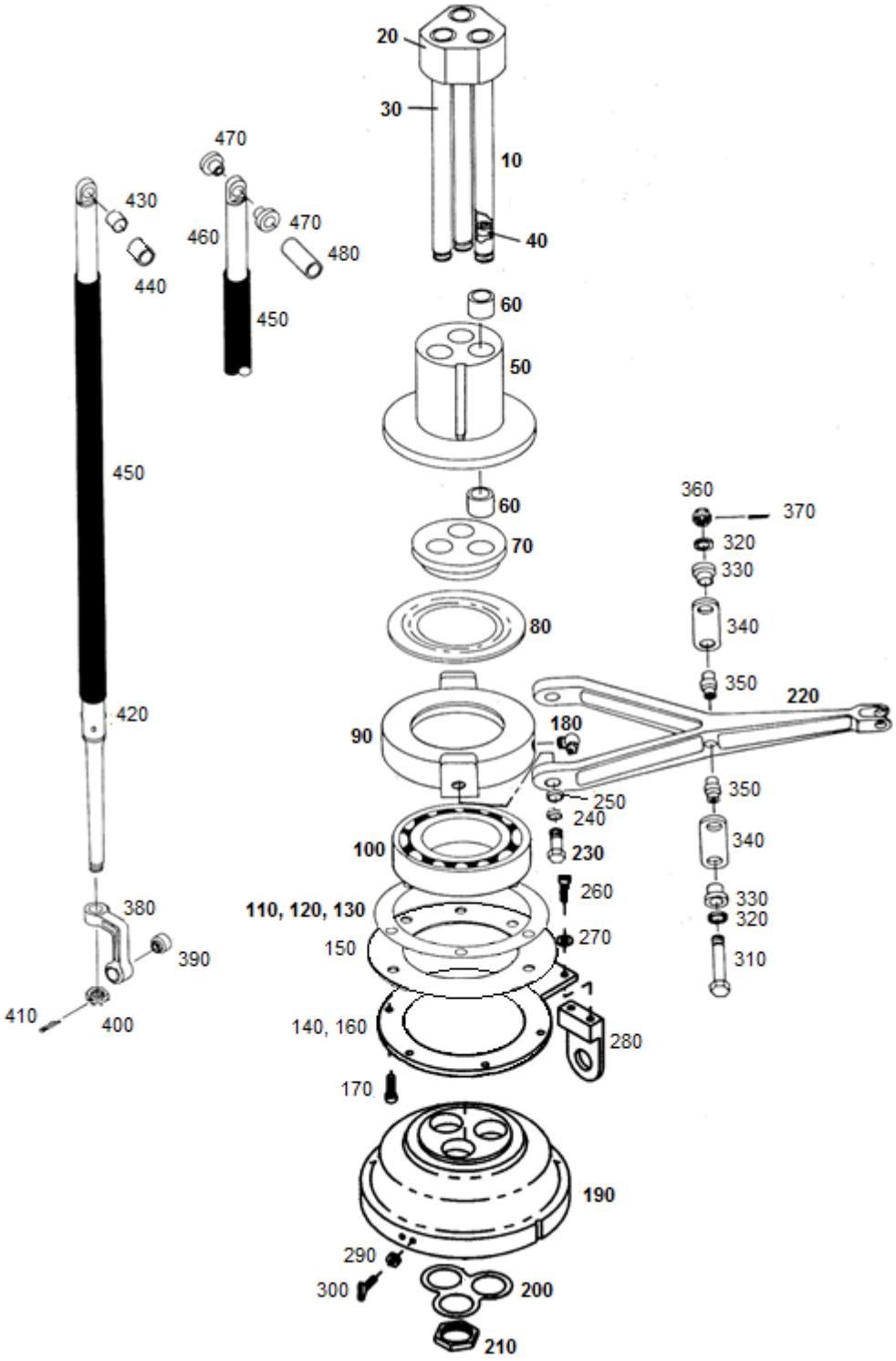

FIGURE 8-3A. UPPER SWASHPLATE ASSEMBLY & CONTROL ATTACHMENT

Visit www.enstromhelicopter.com for instructions to order an original manual and to register for email notification updates.

FIGURE 8-3A. UPPER SWASHPLATE ASSEMBLY & CONTROL ATTACHMENT

ITEM NUMBER	PART NUMBER	DESCRIPTION	QTY PER ASSY	MODELS AFFECTED						
				F-28A	280	F-28C	280C	F-28F	280F	280FX
–▼	28-16101-107	Upper Swashplate Assembly	REF	X	X	X	X	X	X	X
10	28-16260-1	. Shaft Guide Assembly	1	X	X	X	X	X	X	X
20	28-16259-1	. . Retainer	1	X	X	X	X	X	X	X
30	28-16105-1	. . Shaft Guide	3	X	X	X	X	X	X	X
40	28-16264-1	. . Bushing	3	X	X	X	X	X	X	X
50	28-16103-1	. Housing	1	X	X	X	X	X	X	X
60	16-DU-14	. . Bearing	6	X	X	X	X	X	X	X
60	16-DU-16	. . Bearing (Alternate to 16-DU-14)	6	X	X	X	X	X	X	X
60	16-DU-12	. . Bearing (Superseded by 16-DU-16)	6	X	X	X	X	X	X	X
70	28-16106-2	. Bearing Spacer	1	X	X	X	X	X	X	X
80	28-16386-1	. Slinger	1	X	X	X	X	X	X	X
90	28-16108-11	. Bearing Housing	1	X	X	X	X	X	X	X
90	28-16108-2	. Bearing Housing (Superseded by 28-16108-11)	1	X	X	X	X	X	X	X
100	ECD013-11	. Bearing (Used with 28-16108-11)	1	X	X	X	X	X	X	X
–	ECD013-13	. Bearing (Used with 28-16108-2)	1	X	X	X	X	X	X	X
110	28-16125-3	. Shim .005	A/R	X	X	X	X	X	X	X
120	28-16125-4	. Shim .003	A/R	X	X	X	X	X	X	X
130	28-16125-5	. Shim .002	A/R	X	X	X	X	X	X	X
140**	28-16043-19	. Bracket Retainer	1	X	X	X	X	X	X	X
150∞	28-16389-2	. Seal Retainer (Superseded by 28-16043-19)	1	X	X	X	X	X	X	X
160∞	28-16110-1	. Retainer (Superseded by 28-16043-19)	1	X	X	X	X	X	X	X
170	AN503-10-10	. Screw	6	X	X	X	X	X	X	X
180	1637-B1	. Lube Fitting	1	X	X	X	X	X	X	X
180	1911-B	. Lube Fitting	1	X	X	X	X	X	X	X
190	28-16112-17	. Housing	1	X	X	X	X	X	X	X

UNCONTROLLED COPY WHEN DOWNLOADED OR PRINTED

Visit www.enstromhelicopter.com for instructions to order an original manual and to register for email notification updates.

FIGURE 8-3A. UPPER SWASHPLATE ASSEMBLY & CONTROL ATTACHMENT

ITEM NUMBER	PART NUMBER	DESCRIPTION	QTY PER ASSY	MODELS AFFECTED						
				F-28A	280	F-28C	280C	F-28F	280F	280FX
190	28-16112-15	. Housing (Superseded by 28-16112-17)	1	X	X	X	X	X	X	X
200	28-16126-1	. Lock Plate	1	X	X	X	X	X	X	X
210	28-16113-1	. Nut	3	X	X	X	X	X	X	X
220	28-16131-11	. Walking Beam	1	X	X	X	X	X	X	X
220	28-16131-1	. Walking Beam (Superseded by 28-16131-11)	1	X	X	X	X	X	X	X
230	28-16109-1	. Bolt (Used with 28-16108-2)	2	X	X	X	X	X	X	X
230▲	28-16109-11	. Bolt (Used with 28-16108-11)	2	X	X	X	X	X	X	X
240	28-16109-13	. Bushing (Used with 28-16108-11)	2	X	X	X	X	X	X	X
250	LHSSE-5	. Spherical Bearing	2	X	X	X	X	X	X	X
–◊	28-22350-1	Kit Installation	REF	X	X	X	X	X	X	X
260◊	NAS1101-3-10	. Screw	2	X	X	X	X	X	X	X
260◊	AN502-10-10	. Screw (Superseded by NAS1101-3-10)	2	X	X	X	X	X	X	X
270◊	NAS1149F0332P	. Washer	2	X	X	X	X	X	X	X
270◊	AN960-10L	. Washer (Alternate)	2	X	X	X	X	X	X	X
280◊	28-16043-13	. Interrupter Bracket	1	X	X	X	X	X	X	X
290◊	MS35649-282	. Nut	4	X	X	X	X	X	X	X
290◊	AN340-832	. Nut (Superseded by MS35649-282)	4	X	X	X	X	X	X	X
300◊	28-16043-15	. Interrupter Tab	4	X	X	X	X	X	X	X
310	NAS6604D31	. Bolt	2	X	X	X	X	X	X	X
310	AN4-23	. Bolt (Superseded by NAS6604D31)	2	X	X	X	X	X	X	X
320	ECD050-11	. 1/4 Washer	4	X	X	X	X	X	X	
–	28-16132-1	. Support Link Assembly	2	X	X	X	X	X	X	X
330	28-16132-4	. . Bearing	2	X	X	X	X	X	X	X
340	28-16132-3	. . Link Support	1	X	X	X	X	X	X	X
350	28-16133-1	. Bushing	2	X	X	X	X	X	X	X

UNCONTROLLED COPY WHEN DOWNLOADED OR PRINTED

Visit www.enstromhelicopter.com for instructions to order an original manual and to register for email notification updates.

FIGURE 8-3A. UPPER SWASHPLATE ASSEMBLY & CONTROL ATTACHMENT

ITEM NUMBER	PART NUMBER	DESCRIPTION	QTY PER ASSY	MODELS AFFECTED						
				F-28A	280	F-28C	280C	F-28F	280F	280FX
360	MS17825-4	. Nut	2	X	X	X	X	X	X	
360	F12NE-4753-048	. Nut (Superseded by MS17825-4)	2	X	X	X	X	X	X	
370	MS24665-1013	. Cotter Pin	2	X	X	X	X	X	X	
370	AN381-2-7	. Cotter Pin (Superseded by MS24665-1013)	2	X	X	X	X	X	X	
380	28-16143-3	. Dog Leg Rod End	3	X	X	X	X	X	X	X
380	28-16143-1	. Dog Leg Rod End (Superseded by 28-16143-3)	3	X	X	X	X	X	X	X
390	ECD030-11	. . Bearing	3	X	X	X	X	X	X	X
400	AN320-8	. Nut	3	X	X	X	X	X	X	X
410	MS24665-302	. Cotter Pin	3	X	X	X	X	X	X	X
410	AN381-3-16	. Cotter Pin (Superseded by MS24665-302)	3	X	X	X	X	X	X	X
420♦*	28-16253-103	. Push-Pull Rod Assy.	3					X		X
420*	28-16253-101	. Push-Pull Rod Assy. (Replaced by 28-16253-103)	3	X	X	X	X	X	X	X
430	M81934/1-08C012	. . Bearing (Used with 28-16253-103)	3					X	X	X
430	MS21240-08C12	. . Bearing (Superseded by M81934/1-08C012)	3					X	X	X
440»	28-16336-11	. . Bushing (Used with 28-16253-103)	3					X	X	X
450	28-16253-8	. . Shrink Tube	1	X	X	X	X	X	X	X
450	28-16253-6	. . Shrink Tube (Superseded by 28-16253-8)	1	X	X	X	X	X	X	X
460*†	28-16253-105	. . Push-Pull Rod Assy.	1	X	X	X	X	X	X	
460*	28-16253-1	. . Push-Pull Rod Assy. (Replaced by 28-16253-105)	1	X	X	X	X	X	X	X
470	28-16201-1	. . Bushing	2	X	X	X	X	X	X	
480	28-16203-1	. . Spacer (Used with 28-16253-105)	3	X	X	X	X	X	X	X

UNCONTROLLED COPY WHEN DOWNLOADED OR PRINTED

Visit www.enstromhelicopter.com for instructions to order an original manual and to register for email notification updates.

▼	Available as a remanufactured part (-R).
**	Effectivity F-28F S/N 829 and subsequent and 280FX S/N 2134 and subsequent. Eligibility F-28F S/N 509 and subsequent and 280FX S/N 2001 and subsequent.
∞	Integrated into 28-16043-19.
▲	Replaces the 28-16109-1 bolt in production. 28-16109-11 may be used with bearing housing 28-16108-2 for service.
◊	Chadwick/Helmuth Tracking/Balance Kit optional equipment.
♦	Effectivity F-28F S/N 816 – subsequent and 280FX S/N 2100 – subsequent.
*	See SDB 0096, latest revision.
†	Service replacement only.
»	Depicted as Item Number 60 in Figure 8-4; shown for clarification.

UNCONTROLLED COPY WHEN DOWNLOADED OR PRINTED

Visit www.enstromhelicopter.com for instructions to order an original manual and to register for email notification updates.

INTENTIONALLY LEFT BLANK

UNCONTROLLED COPY WHEN DOWNLOADED OR PRINTED
Visit www.enstromhelicopter.com for instructions to order an original manual and to register for email notification updates.

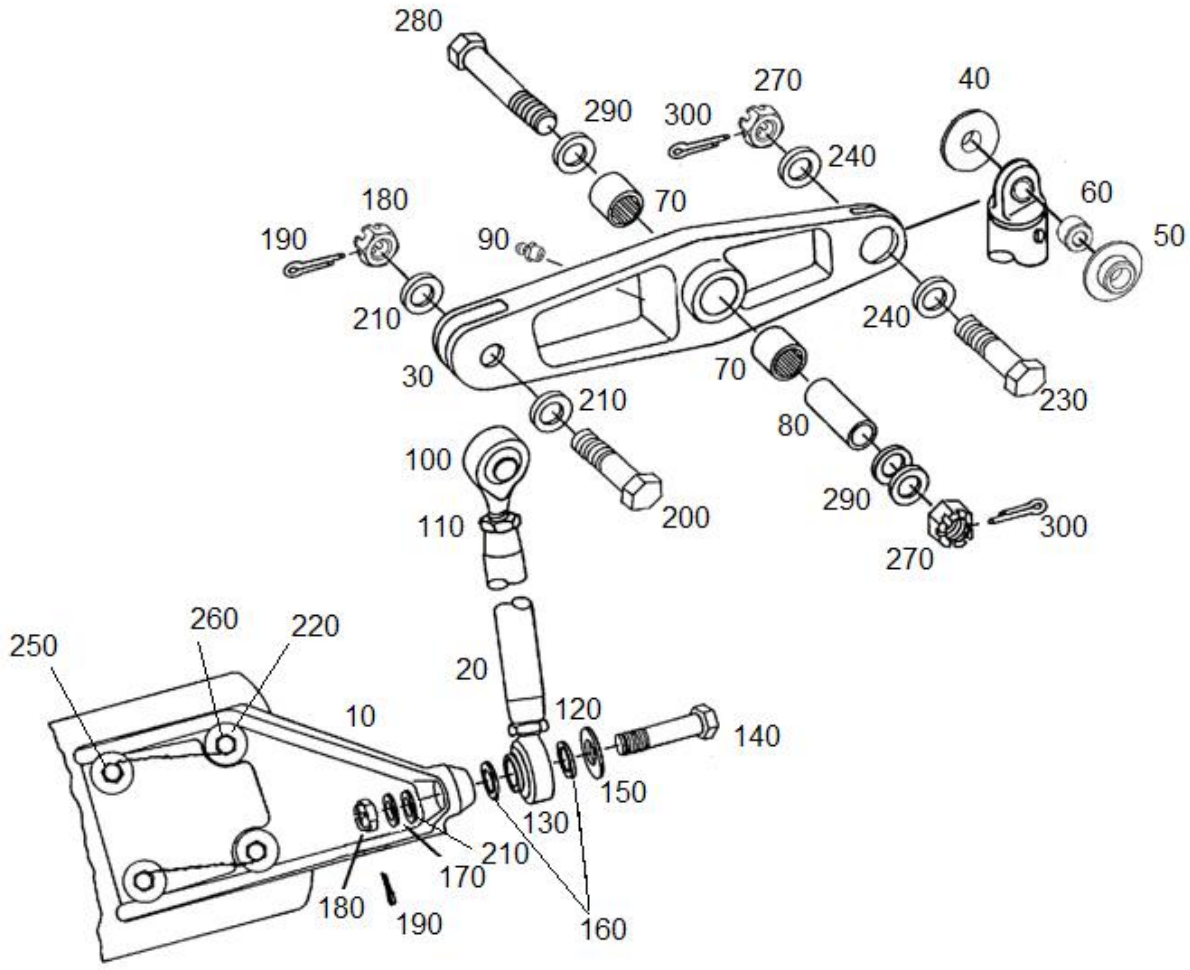

FIGURE 8-4. MAIN ROTOR PITCH CHANGE CONTROLS

UNCONTROLLED COPY WHEN DOWNLOADED OR PRINTED
Visit www.enstromhelicopter.com for instructions to order an original manual and to register for email notification updates.

FIGURE 8-4. MAIN ROTOR PITCH CHANGE CONTROLS

ITEM NUMBER	PART NUMBER	DESCRIPTION	QTY PER ASSY	MODELS AFFECTED						
				F-28A	280	F-28C	280C	F-28F	280F	280FX
–▼	28-16101-105	Main Rotor Rotating Controls - Installation	REF	X	X	X	X	X	X	X
10	28-14278-1	. . Pitch Arm	3	X	X	X	X	X	X	X
20	28-16206-11	. Barrel	3	X	X	X	X	X	X	X
30	28-14207-101	. Walking Beam Assembly	3	X	X	X	X	X	X	X
30	28-14207-7	. Walking Beam Assembly (Obsolete)	3					X	X	X
30	28-14207-1	. Walking Beam Assembly (Obsolete)	3	X	X	X	X	X	X	X
40	28-14250-1	. . Bushing (Flange) (Used with 28-14207-7 & 28-14207-101)	1					X	X	X
50	28-14250-3	. . Bushing (Flange) (Used with 28-14207-7 & 28-14207-101)	1					X	X	X
60	28-16336-11	. Bushing (Used with 28-14207-7 & 28-14207-101))	1					X	X	X
60	28-16203-1	. Spacer, (Used with 28-14207-7)	1	X	X	X	X	X	X	X
70	GB-910	. . Bearing	2	X	X	X	X	X	X	X
80	28-14262-1	. Race	3	X	X	X	X	X	X	X
90	1641-B	. . Lube Fitting	1	X	X	X	X	X	X	X
100	01-691-05	. Rod End	3	X	X	X	X	X	X	X
110	AN316-5R	. Nut	3	X	X	X	X	X	X	X
120	AN316-5L	. Nut	3	X	X	X	X	X	X	X
130	11-691-05	. Rod End	3	X	X	X	X	X	X	X
140	NAS6605D21	. Bolt	3	X	X	X	X	X	X	X
140	AN5-16	. Bolt (Superseded by NAS6605D21)	3	X	X	X	X	X	X	X
150	ECD050-19	. 5/16 Washer	3	X	X	X	X	X	X	X
150	5/16 HARPER	. Flat Washer (Superseded by ECD050-19)	3	X	X	X	X	X	X	X
160	28-14259-3	. Washer	6	X	X	X	X	X	X	X
170	NAS1149F0563P	. Washer	3	X	X	X	X	X	X	X

Visit www.enstromhelicopter.com for instructions to order an original manual and to register for email notification updates.

FIGURE 8-4. MAIN ROTOR PITCH CHANGE CONTROLS

ITEM NUMBER	PART NUMBER	DESCRIPTION	QTY PER ASSY	MODELS AFFECTED						
				F-28A	280	F-28C	280C	F-28F	280F	280FX
170	AN960-516	. Washer (Alternate)	3	X	X	X	X	X	X	X
180	MS17825-5	. Nut	6	X	X	X	X	X	X	X
180	F12NE-4753-054	. Nut (Superseded by MS17825-5)	6	X	X	X	X	X	X	X
190	MS24665-151	. Cotter Pin	6	X	X	X	X	X	X	X
190	AN381-2-8	. Cotter Pin (Superseded by MS24665-151)	6	X	X	X	X	X	X	X
200	NAS6605D11	. Bolt	3	X	X	X	X	X	X	X
200	AN5-11	. Bolt (Superseded by NAS6605D11)	3	X	X	X	X	X	X	X
210	NAS1149F0532P	. Washer	9	X	X	X	X	X	X	X
210	AN960-516L	. Washer (Alternate)	9	X	X	X	X	X	X	X
220	AN960D516	. . Washer	12	X	X	X	X	X	X	X
220	NAS1149D0563H	. . Washer (Alternate)	12	X	X	X	X	X	X	X
230	NAS6604D11	. Bolt	3	X	X	X	X	X	X	X
230	AN4-11	. Bolt (Superseded by NAS6604D11)	3	X	X	X	X	X	X	X
240	NAS1149F0432P	. . Washer	6	X	X	X	X	X	X	X
240	AN960-416L	. . Washer (Alternate)	6	X	X	X	X	X	X	X
250	MS20073-05-A6	. . Bolt	6	X	X	X	X	X	X	X
250	AN75A6	. . Bolt (Superseded by MS20073-05-A6)	6	X	X	X	X	X	X	X
260	MS20073-05-A12	. . Bolt	6	X	X	X	X	X	X	X
260	AN75A12	. . Bolt (Superseded by MS20073-05-A12)	6	X	X	X	X	X	X	X
270	MS17825-4	. Nut	6	X	X	X	X	X	X	X
270	F12NE-4753-048	. Nut (Superseded by MS17825-4)	6	X	X	X	X	X	X	X
280	AN174-21	. Bolt	3	X	X	X	X	X	X	X
290	NAS1149F0463P	. Washer	9	X	X	X	X	X	X	X

UNCONTROLLED COPY WHEN DOWNLOADED OR PRINTED

Visit www.enstromhelicopter.com for instructions to order an original manual and to register for email notification updates.

FIGURE 8-4. MAIN ROTOR PITCH CHANGE CONTROLS

ITEM NUMBER	PART NUMBER	DESCRIPTION	QTY PER ASSY	MODELS AFFECTED						
				F-28A	280	F-28C	280C	F-28F	280F	280FX
290	AN960-416	. Washer (Alternate)	9	X	X	X	X	X	X	X
300	MS24665-1013	. Cotter Pin	6	X	X	X	X	X	X	X
300	AN381-2-7	. Cotter Pin (Superseded by MS24665-1013)	6	X	X	X	X	X	X	X

▼ Available as a remanufactured part (-R).

UNCONTROLLED COPY WHEN DOWNLOADED OR PRINTED

Visit www.enstromhelicopter.com for instructions to order an original manual and to register for email notification updates.

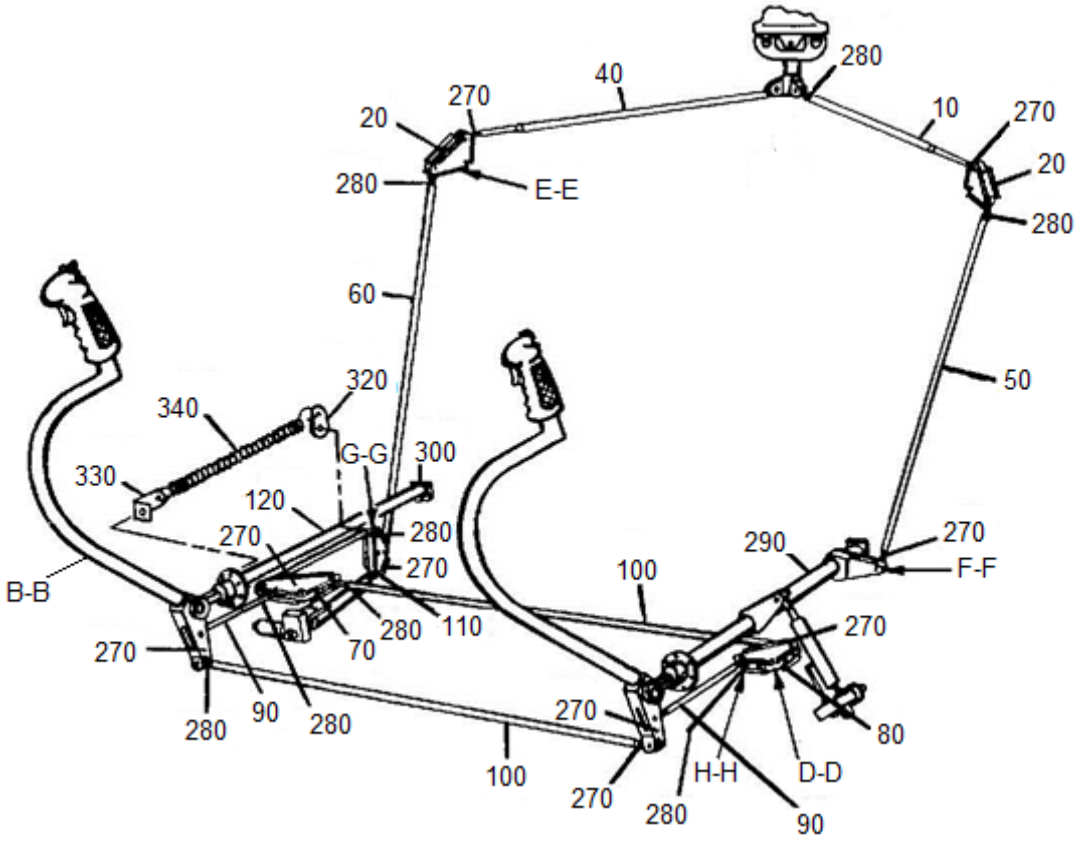

Sheet 1 of 3

FIGURE 8-5. CYCLIC CONTROL ASSEMBLY

UNCONTROLLED COPY WHEN DOWNLOADED OR PRINTED

Visit www.enstromhelicopter.com for instructions to order an original manual and to register for email notification updates.

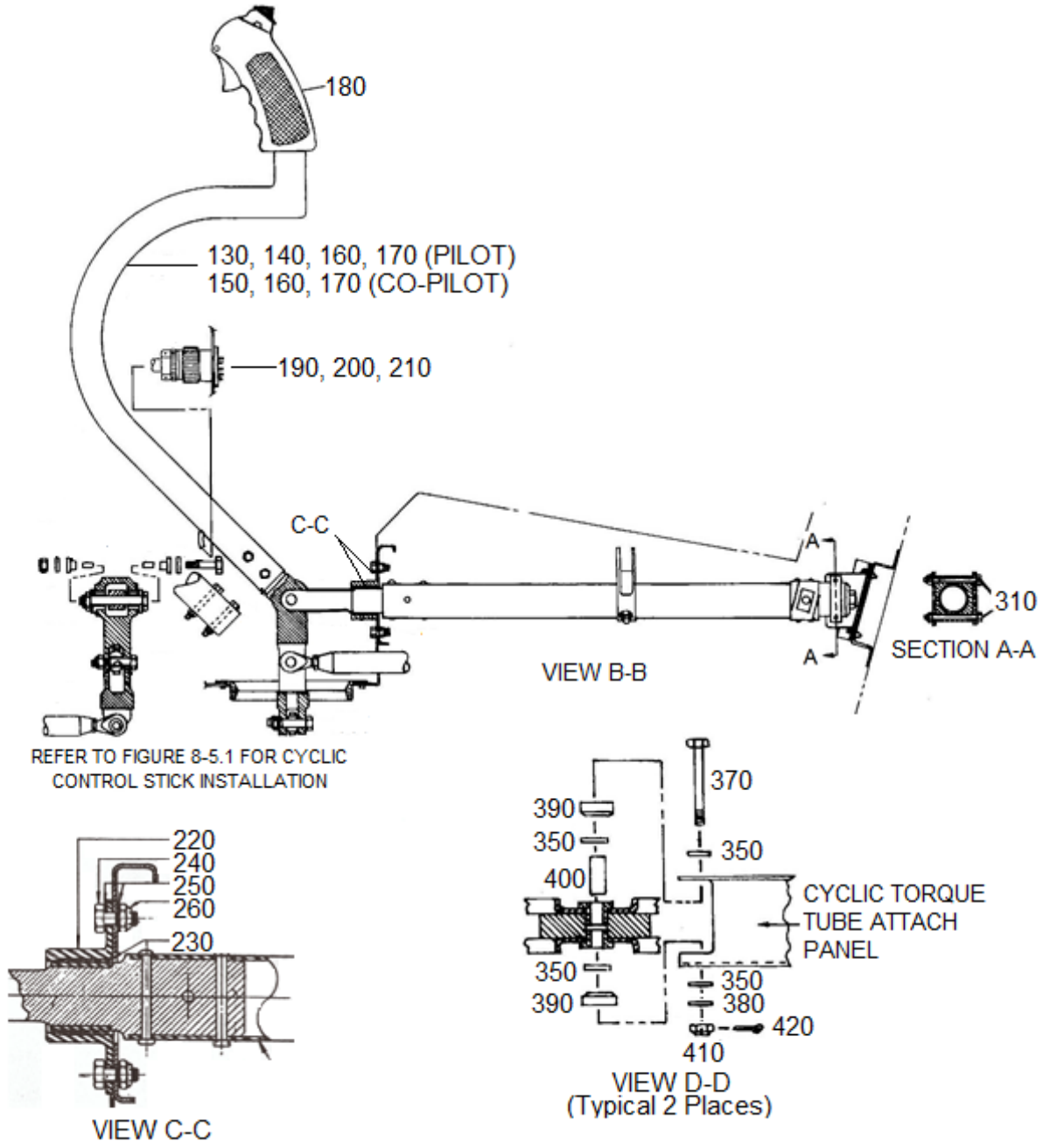

Sheet 2 of 3

FIGURE 8-5. CYCLIC CONTROL ASSEMBLY

UNCONTROLLED COPY WHEN DOWNLOADED OR PRINTED

Visit www.enstromhelicopter.com for instructions to order an original manual and to register for email notification updates.

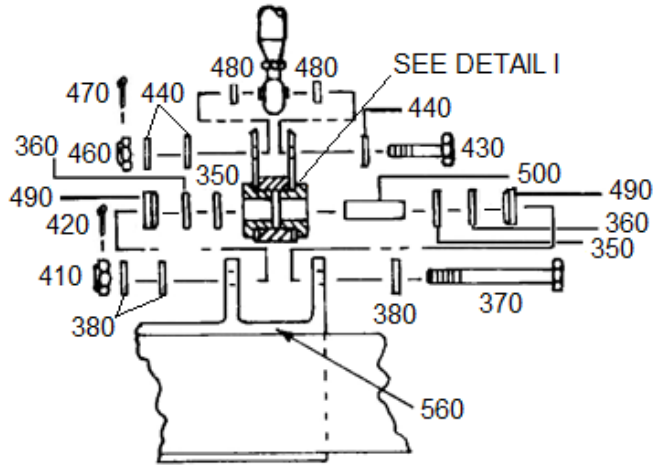

VIEW E-E
(Typical 2 Places)

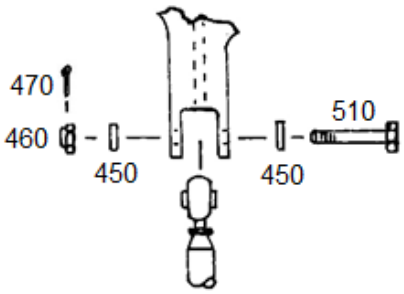

VIEW F-F

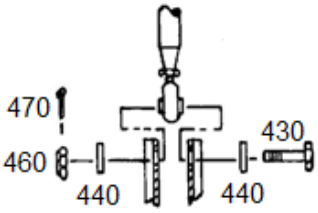

VIEW H-H
(Typical 8 Places for Dual Controls)
(Typical 7 Places for Single Control)

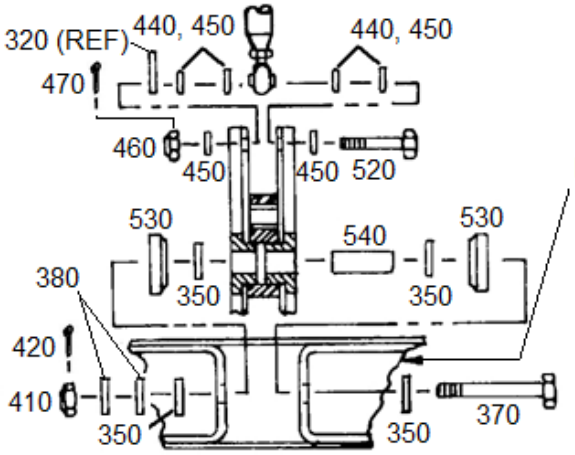

VIEW G-G

FORE AND AFT BELLCRANK
SUPPORT BEAM
(REF)

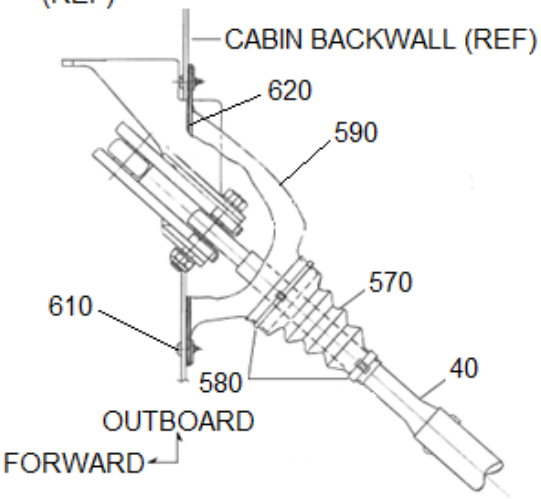

CYCLIC CONTROL TUBE ASSEMBLY
COVER INSTALLATION (Longitudinal Shown)

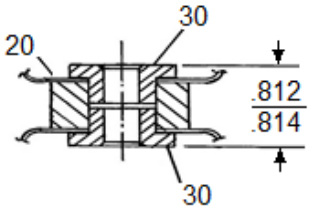

DETAIL I

Sheet 3 of 3

FIGURE 8-5. CYCLIC CONTROL ASSEMBLY

UNCONTROLLED COPY WHEN DOWNLOADED OR PRINTED

Visit www.enstromhelicopter.com for instructions to order an original manual and to register for email notification updates.

FIGURE 8-5. CYCLIC CONTROL ASSEMBLY

ITEM NUMBER	PART NUMBER	DESCRIPTION	QTY PER ASSY	MODELS AFFECTED						
				F-28A	280	F-28C	280C	F-28F	280F	280FX
–♦†	28-16024	Cyclic Control System Stick Installation	REF	X	X	X	X	X	X	X
10	28-16197-1	. Push-Pull Rod Assembly	1	X	X	X	X	X	X	X
20**	28-16218-1	. Bellcrank Assembly	2	X	X	X	X	X	X	X
30**	28-16156-1	. . Bearing	2	X	X	X	X	X	X	X
40	28-16198-1	. Push-Pull Rod Assembly	1	X	X	X	X	X	X	X
50	28-16190-1	. Push-Pull Rod Assembly	1	X	X	X	X	X	X	X
60	28-16191-1	. Push-Pull Rod Assembly	1	X	X	X	X	X	X	X
70	28-16158-1	. Bellcrank Assembly	1	X	X	X	X	X	X	X
80	28-16159-1	. Bellcrank Assembly	1	X	X	X	X	X	X	X
90♦	28-16155-5	. Push-Pull Rod	2	X	X	X	X	X	X	X
100♦	28-16192-1	. Push-Pull Rod Assembly	2	X	X	X	X	X	X	X
110	28-16160-7	. Bellcrank Assembly	1	X	X	X	X	X	X	X
110	28-16160-1	. Bellcrank Assembly (Superseded by 28-16160-7)	1	X	X	X	X			
120	28-16155-4	. Push-Pull Rod	1	X	X	X	X	X	X	X
130	28-19021-2	. Cyclic Stick Assembly (Pilot, Chrome, Long) (Superseded by 28-19021-15)	1	X	X	X	X	X	X	X
–130A	28-19021-15	. Cyclic Stick Assembly (Pilot, Chrome, Long)	1	X	X	X	X	X	X	X
–130B◊	28-19021-13	. Cyclic Stick Assembly (Pilot, Chrome, Long)	1	X	X	X	X	X	X	X
–130C	28-19021-19	. Cyclic Stick Assembly (Pilot, Chrome, Long)	1	X	X	X	X	X	X	X
–130D	28-19021-23	. Cyclic Stick Assembly (Pilot, Chrome, Long)	1	X	X	X	X	X	X	X
–130E	28-19021-25	. Cyclic Stick Assembly (Pilot, Chrome, Long)	1	X	X	X	X	X	X	X
–130F▲◊	28-19021-35	. Cyclic Stick Assembly (Pilot, Flat Black, Long)	1	X	X	X	X	X	X	X
–130G▲	28-19021-37	. Cyclic Stick Assembly (Pilot, Flat Black, Long)	1	X	X	X	X	X	X	X
140»	28-19021-31	. Cyclic Stick Assembly (Pilot, Chrome, Short)	1	X	X	X	X	X	X	X

UNCONTROLLED COPY WHEN DOWNLOADED OR PRINTED

Visit www.enstromhelicopter.com for instructions to order an original manual and to register for email notification updates.

FIGURE 8-5. CYCLIC CONTROL ASSEMBLY

ITEM NUMBER	PART NUMBER	DESCRIPTION	QTY PER ASSY	MODELS AFFECTED						
				F-28A	280	F-28C	280C	F-28F	280F	280FX
–140A▲	28-19021-41	. Cyclic Stick Assembly (Pilot, Flat Black, Short)	1	X	X	X	X	X	X	X
150♦	28-19021-3	. Cyclic Stick Assembly (Co-Pilot, Chrome, Long) (Superseded by 28-19021-17)	2	X	X	X	X	X	X	X
–150A♦	28-19021-17	. Cyclic Stick Assembly (Co-Pilot, Chrome, Long)	2	X	X	X	X	X	X	X
–150B	28-19021-21	. Cyclic Stick Assembly (Co-Pilot, Chrome, Long)	1	X	X	X	X	X	X	X
–150C	28-19021-27	. Cyclic Stick Assembly (Co-Pilot, Chrome, Long)	1	X	X	X	X	X	X	X
160∞	28-19021-29	. Cyclic Stick Assembly (Chrome, Long)	1	X	X	X	X	X	X	X
–160A∞	28-19021-39	. Cyclic Stick Assembly (Flat Black, Long)	1	X	X	X	X	X	X	X
170∞	28-19021-33	. Cyclic Stick Assembly (Chrome, Short)	1	X	X	X	X	X	X	X
–170A∞	28-19021-43	. Cyclic Stick Assembly (Flat Black, Short)	1	X	X	X	X	X	X	X
180♦	G-38517-B-7-A	. . Grip	2	X	X	X	X	X	X	
–180A	28-16026-1	. . Cyclic Stick Grip Assembly (Used with Items 130 and –130A)	1	X	X	X	X	X	X	X
–180B	28-16026-3	. . Cyclic Stick Grip Assembly (Used with Items –130B and –130F)	1	X	X	X	X	X	X	X
–180C	28-16026-5	. . Cyclic Stick Grip Assembly (Used with Item –130C)	1	X	X	X	X	X	X	X
–180D	28-16026-7	. . Cyclic Stick Grip Assembly (Used with Item –130D)	1	X	X	X	X	X	X	X
–180E	28-16026-9	. . Cyclic Stick Grip Assembly (Used with Items –130E, 140, and –140A)	1	X	X	X	X	X	X	X
–180F	A-218-938517-00	. . Grip Type B-7-A (Used with Items 150 and –150A)	2	X	X	X	X	X	X	X
–180G	702-5123	. . Grip (Used with Item –150B)	1			X	X	X		X
–180H	702-5130	. . Grip (Used with Item –150C)	1			X	X	X		X

UNCONTROLLED COPY WHEN DOWNLOADED OR PRINTED

Visit www.enstromhelicopter.com for instructions to order an original manual and to register for email notification updates.

FIGURE 8-5. CYCLIC CONTROL ASSEMBLY

ITEM NUMBER	PART NUMBER	DESCRIPTION	QTY PER ASSY	MODELS AFFECTED						
				F-28A	280	F-28C	280C	F-28F	280F	280FX
–180I	G2-0032	. . Grip (Used with Items 160, –160A, 170, and –170A)	1					X		X
–	28-16136-1	. . Cyclic Stick (Chrome, Long) (Used in 28-19021-13, -25, and -29)	1	X	X	X	X	X	X	X
–	28-16136-5	. . Cyclic Stick (Chrome, Short) (Used in 28-19021-31 and -33)	1	X	X	X	X	X	X	X
–	28-16136-101	. . Cyclic Stick (Flat Black, Long) (Used in 28-19021-35, -37, and -39)	1	X	X	X	X	X	X	X
–	28-16136-103	. . Cyclic Stick (Flat Black, Short) (Used in 28-19021-41 and -43)	1	X	X	X	X	X	X	X
190♦	206036-1	. . Receptacle	2	X	X	X	X	X	X	X
190♦	67-02-E-18-64S	. . Cannon Plug (Superseded by 206036-1)	2	X	X	X	X	X	X	X
200♦	206037-1	. . Plug	2	X	X	X	X	X	X	X
200♦	67-06-C-18-64P	. . Cannon Plug (Superseded by 206037-1)	2	X	X	X	X	X	X	X
200A♦	206044-1	. . Plug (Used with 28-19021-13 and -35)	2	X	X	X	X	X	X	X
210♦	206070-1	. . Clamp	2	X	X	X	X	X	X	X
210A♦	206322-1	. . Clamp (Used with 28-19021-13 and -35)	2	X	X	X	X	X	X	X
220♦	28-16145-1	. Bearing Housing Assembly	2	X	X	X	X	X	X	X
230♦	16DU12	. Bearing	2	X	X	X	X	X	X	X
240♦	NAS6603-1	. Bolt	12	X	X	X	X	X	X	X
240♦	AN3-3A	. Bolt (Superseded by NAS6603-1)	12	X	X	X	X	X	X	X
250♦	NAS1149F0332P	. Washer	36	X	X	X	X	X	X	X
250♦	AN960-10L	. Washer (Alternate)	36	X	X	X	X	X	X	X
260♦	MS20364-1032	. Nut	18	X	X	X	X	X	X	X
260♦	AN364-1032	. Nut (Alternate)	18	X	X	X	X	X	X	X
270♦	HMLVV-5M	. Rod End	9	X	X	X	X	X	X	X
–♦	AN316-5L	. Check Nut	9	X	X	X	X	X	X	X
280♦	HMVV-5M	. Rod End	8	X	X	X	X	X	X	X

UNCONTROLLED COPY WHEN DOWNLOADED OR PRINTED

Visit www.enstromhelicopter.com for instructions to order an original manual and to register for email notification updates.

FIGURE 8-5. CYCLIC CONTROL ASSEMBLY

ITEM NUMBER	PART NUMBER	DESCRIPTION	QTY PER ASSY	MODELS AFFECTED						
				F-28A	280	F-28C	280C	F-28F	280F	280FX
–♦	AN316-5	. Check Nut	8	X	X	X	X	X	X	X
290	28-16205-5	. Cyclic Torque Tube Assembly	1	X	X	X	X	X	X	X
290	28-16205-1	. Cyclic Torque Tube Assembly (Superseded by 28-16205-5)	1	X	X	X	X	X	X	X
300♦	28-16220-5	. Cyclic Torque Tube Assembly	1	X	X	X	X	X	X	X
300♦	28-16220-1	. Cyclic Torque Tube Assembly (Obsolete)	1	X	X	X	X	X	X	X
310♦	NAS6603-24	. Bolt	4	X	X	X	X	X	X	X
310♦	AN3-17A	. Bolt (Superseded by NAS6603-24)	4	X	X	X	X	X	X	X
320	28-16290-2	. Attach Bracket (Aft)	1	X	X	X	X	X	X	X
330	28-16284-1	. Attach Bracket (Fore)	1	X	X	X	X	X	X	X
340	28-16283-4	. Spring	1	X	X	X	X	X	X	X
350	ECD050-11	. 1/4 Washer	16	X	X	X	X	X	X	X
350	1/4 Harper	. Washer (Superseded by ECD050-11)	16	X	X	X	X	X	X	X
360	28-16217-11	. Shim	A/R	X	X	X	X	X	X	X
–360A	28-16217-13	. Shim	A/R	X	X	X	X	X	X	X
–360B	28-16217-15	. Shim	A/R	X	X	X	X	X	X	X
–360C	28-16217-17	. Shim	A/R	X	X	X	X	X	X	X
–360D	28-16217-19	. Shim	A/R	X	X	X	X	X	X	X
–360E	28-16217-21	. Shim	A/R	X	X	X	X	X	X	X
–360F	28-16217-23	. Shim	A/R	X	X	X	X	X	X	X
370	NAS6604D23	. Bolt	5	X	X	X	X	X	X	X
370	AN4-17	. Bolt (Superseded by NAS6604D23)	5	X	X	X	X	X	X	X
380	NAS1149F0463P	. Washer	10	X	X	X	X	X	X	X
380	AN960-416	. Washer (Alternate)	10	X	X	X	X	X	X	X
390	28-16211-1	. Spacer	4	X	X	X	X	X	X	X
400	28-16157-3	. Spacer	2	X	X	X	X	X	X	X
410	MS17825-4	. Nut	5	X	X	X	X	X	X	X

UNCONTROLLED COPY WHEN DOWNLOADED OR PRINTED

Visit www.enstromhelicopter.com for instructions to order an original manual and to register for email notification updates.

FIGURE 8-5. CYCLIC CONTROL ASSEMBLY

ITEM NUMBER	PART NUMBER	DESCRIPTION	QTY PER ASSY	MODELS AFFECTED						
				F-28A	280	F-28C	280C	F-28F	280F	280FX
410	F12NE-4753-048	. Nut (Superseded by MS17825-4)	5	X	X	X	X	X	X	X
420	MS24665-151	. Cotter Pin	5	X	X	X	X	X	X	X
420	AN381-2-8	. Pin (Superseded by MS24665-151)	5	X	X	X	X	X	X	X
430	NAS6605D9	. Bolt	10	X	X	X	X	X	X	X
430	AN5-10	. Bolt (Superseded by NAS6605D9)	10	X	X	X	X	X	X	X
440	NAS1149F0563P	. Washer	25	X	X	X	X	X	X	X
440	AN960-516	. Washer (Alternate)	25	X	X	X	X	X	X	X
450	NAS1149F0532P	. Washer	A/R	X	X	X	X	X	X	X
450	AN960-516L	. Washer (Alternate)	A/R	X	X	X	X	X	X	X
460	MS17825-5	. Nut	12	X	X	X	X	X	X	X
460	F12NE-4753-054	. Nut (Superseded by MS17825-5)	12	X	X	X	X	X	X	X
470	MS24665-152	. Cotter Pin	12	X	X	X	X	X	X	X
470	AN381-2-10	. Pin (Superseded by MS24665-152)	12	X	X	X	X	X	X	X
480	28-14259-3	. Spacer	4	X	X	X	X	X	X	X
490	28-16209-1	. Spacer	A/R	X	X	X	X	X	X	X
–490A	28-16209-11	. Spacer	A/R	X	X	X	X	X	X	X
500	28-16157-4	. Spacer	2	X	X	X	X	X	X	X
510	NAS6605D13	. Bolt	1	X	X	X	X	X	X	X
510	AN5-12	. Bolt (Superseded by NAS6605D13)	1	X	X	X	X	X	X	X
520	NAS6605D11	. Bolt	1	X	X	X	X	X	X	X
520	AN5-11	. Bolt (Superseded by NAS6605D11)	1	X	X	X	X	X	X	X
530	28-16210-3	. Spacer	2	X	X	X	X	X	X	X
540	28-16202-1	. Spacer	1	X	X	X	X	X	X	X
–550	28-11307-902	. Cabin Mount (Left Side)	1	X	X	X	X	X	X	X
560	28-11307-901	. Cabin Mount (Right Side)	1	X	X	X	X	X	X	X
–	28-12719	Push-Pull Rod Cover Installation	REF	X	X	X	X	X	X	X

UNCONTROLLED COPY WHEN DOWNLOADED OR PRINTED

Visit www.enstromhelicopter.com for instructions to order an original manual and to register for email notification updates.

FIGURE 8-5. CYCLIC CONTROL ASSEMBLY

ITEM NUMBER	PART NUMBER	DESCRIPTION	QTY PER ASSY	MODELS AFFECTED						
				F-28A	280	F-28C	280C	F-28F	280F	280FX
570	LDF-6-228	. Boot	2	X	X	X	X	X	X	X
580	SST25-MP	. Cable Tie	4	X	X	X	X	X	X	X
590	28-12719-11	. Cover (R.H.)	1	X	X	X	X	X	X	X
–600	28-12719-12	. Cover (L.H.)	1	X	X	X	X	X	X	X
610	6RX1/2	. Screw	8	X	X	X	X	X	X	X
620	4508-75	. 1/8” Foam Tape	A/R	X	X	X	X	X	X	X

◊ Cargo hook option.

** If new 28-16156-1 bearings are installed in 28-16218-1 bellcrank; machine bearings per dimension specified (Figure 8-5, Sheet 3).

† See also Figure 8-5.1. for additional installation detail.

♦ Quantities listed represent cyclic system dual control installation where applicable.

▲ Effectivity F-28F S/N 831 and subsequent; 280FX S/N 2141 and subsequent.

» Effectivity F-28F S/N 817 and subsequent; 280FX S/N 2108 and subsequent.

∞ Effectivity F-28F S/N 833 and subsequent; 280FX S/N 2167 and subsequent.

UNCONTROLLED COPY WHEN DOWNLOADED OR PRINTED

Visit www.enstromhelicopter.com for instructions to order an original manual and to register for email notification updates.

INTENTIONALLY LEFT BLANK

UNCONTROLLED COPY WHEN DOWNLOADED OR PRINTED
Visit www.enstromhelicopter.com for instructions to order an original manual and to register for email notification updates.

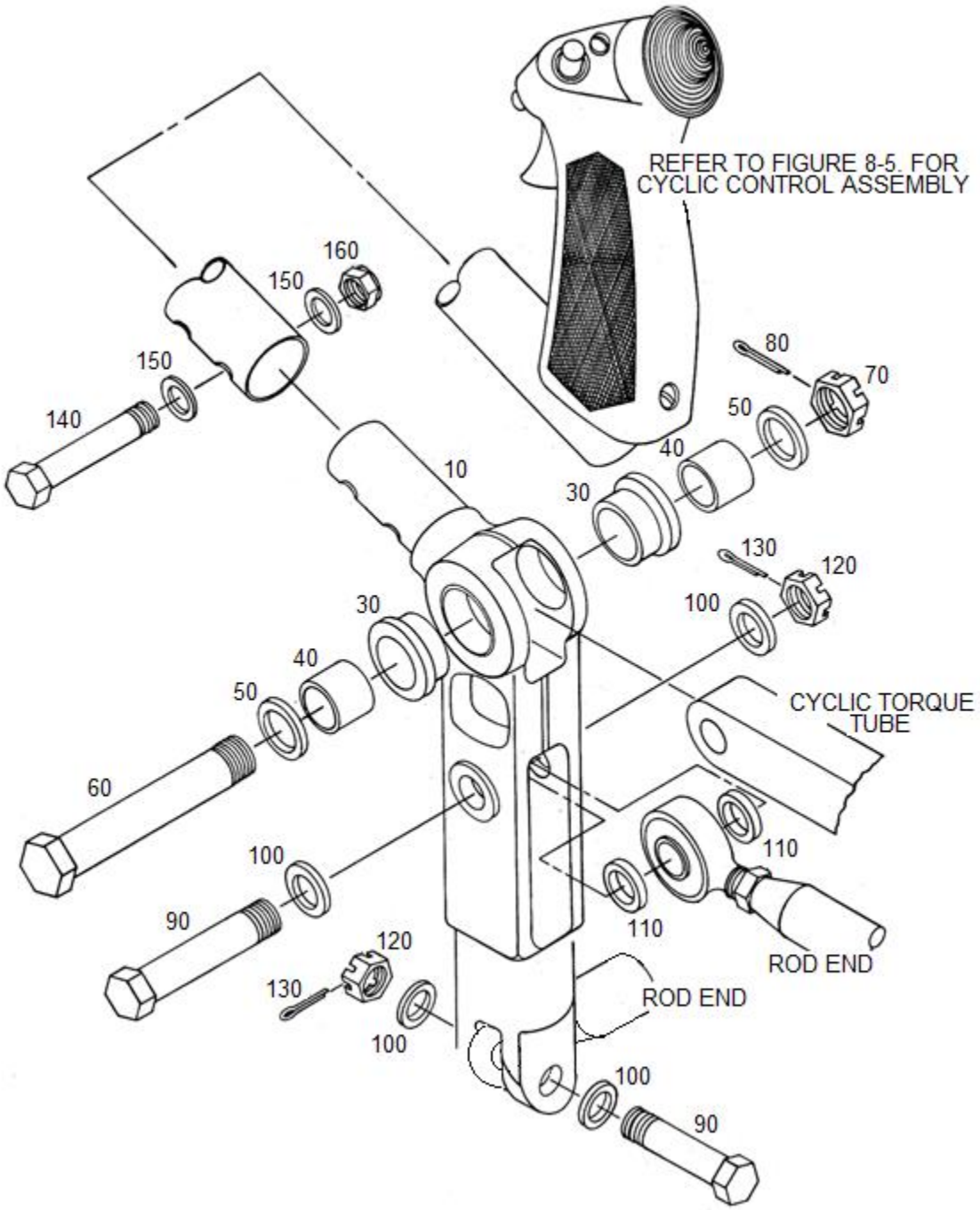

FIGURE 8-5A. CYCLIC CONTROL STICK INSTALLATION

UNCONTROLLED COPY WHEN DOWNLOADED OR PRINTED

Visit www.enstromhelicopter.com for instructions to order an original manual and to register for email notification updates.

FIGURE 8-5A. CYCLIC CONTROL STICK INSTALLATION

ITEM NUMBER	PART NUMBER	DESCRIPTION	QTY PER ASSY	MODELS AFFECTED						
				F-28A	280	F-28C	280C	F-28F	280F	280FX
–	28-16024-911	Cyclic Stick Fitting (Replaces 28-16183-901)	REF	X	X	X	X	X	X	X
–	28-16024-912	Cyclic Stick Fitting (Alternate to 28-16024-911)	REF	X	X	X	X	X	X	X
10	28-16183-1	. Cyclic Stick Fitting	2	X	X	X	X	X	X	X
10	28-16183-901	. Cyclic Stick Fitting (Obsolete)	2	X	X	X	X	X	X	X
–20	28-16390-11	. Cyclic Stick Fitting (Used with 28-16024-912) (Alternate to 28-16183-1)	2	X	X	X	X	X	X	X
30	28-16150-1	. Flanged Bearing	4	X	X	X	X	X	X	X
40	28-16148-3	. Spacer	4	X	X	X	X	X	X	X
40	28-16148-1	. Spacer (Superseded by 28-16148-3)	4	X	X	X	X	X	X	X
50	28-16056-1	. Washer	4	X	X	X	X	X	X	X
60	NAS6606D25	. Bolt	2	X	X	X	X	X	X	X
60	AN6-22	. Bolt (Superseded by NAS6606D25)	2	X	X	X	X	X	X	X
70	MS17825-6	. Nut	2	X	X	X	X	X	X	X
70	F12NE-4753-064	. Nut (Superseded by MS17825-6)	2	X	X	X	X	X	X	X
80	MS24665-300	. Cotter Pin	2	X	X	X	X	X	X	X
80	AN381-3-12	. Pin (Superseded by MS24665-300)	2	X	X	X	X	X	X	X
90	NAS6605D15	. Bolt	4	X	X	X	X	X	X	X
90	AN5-13	. Bolt (Superseded by NAS6605D15)	4	X	X	X	X	X	X	X
100	NAS1149F0532P	. Washer	8	X	X	X	X	X	X	X
100	AN960-516L	. Washer (Alternate)	8	X	X	X	X	X	X	X
110	28-16057-1	. Spacer	4	X	X	X	X	X	X	X
120	MS17825-5	. Nut	4	X	X	X	X	X	X	X
120	F12NE-4753-054	. Nut (Superseded by MS17825-5)	4	X	X	X	X	X	X	X
130	MS24665-151	. Cotter Pin	4	X	X	X	X	X	X	X
130	AN381-2-8	. Pin (Superseded by MS24665-151)	4	X	X	X	X	X	X	X

UNCONTROLLED COPY WHEN DOWNLOADED OR PRINTED

Visit www.enstromhelicopter.com for instructions to order an original manual and to register for email notification updates.

FIGURE 8-5A. CYCLIC CONTROL STICK INSTALLATION

ITEM NUMBER	PART NUMBER	DESCRIPTION	QTY PER ASSY	MODELS AFFECTED						
				F-28A	280	F-28C	280C	F-28F	280F	280FX
140	NAS6603-18	. Bolt	4	X	X	X	X	X	X	X
140	AN3-14A	. Bolt (Superseded by NAS6603-18)	4	X	X	X	X	X	X	X
150	NAS1149F0332P	. Washer	8	X	X	X	X	X	X	X
150	AN960-10L	. Washer (Alternate)	8	X	X	X	X	X	X	X
160	MS20364-1032	. Nut	4	X	X	X	X	X	X	X
160	AN364-1032	. Nut (Alternate)	4	X	X	X	X	X	X	X

UNCONTROLLED COPY WHEN DOWNLOADED OR PRINTED
Visit www.enstromhelicopter.com for instructions to order an original manual and to register for email notification updates.

INTENTIONALLY LEFT BLANK

UNCONTROLLED COPY WHEN DOWNLOADED OR PRINTED
Visit www.enstromhelicopter.com for instructions to order an original manual and to register for email notification updates.

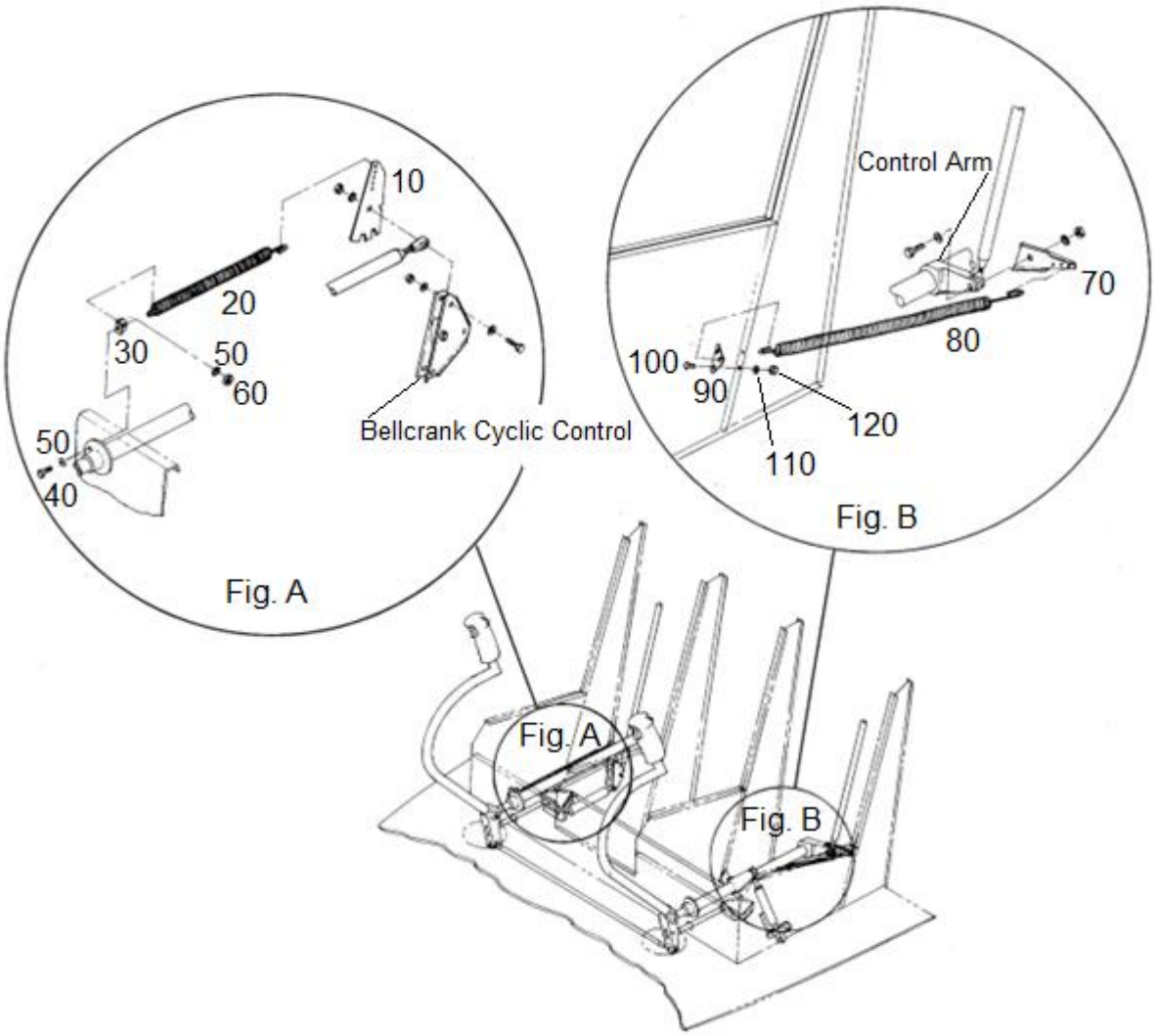

FIGURE 8-6. TRIM SPRING MECHANICAL INSTALLATION

UNCONTROLLED COPY WHEN DOWNLOADED OR PRINTED

Visit www.enstromhelicopter.com for instructions to order an original manual and to register for email notification updates.

FIGURE 8-6. TRIM SPRING MECHANICAL INSTALLATION

ITEM NUMBER	PART NUMBER	DESCRIPTION	QTY PER ASSY	MODELS AFFECTED						
				F-28A	280	F-28C	280C	F-28F	280F	280FX
–	28-16024	Cyclic Control System Installation	REF			X	X			
–	28-16295-1	. Bias Spring Installation Cyclic Fore/Aft Control	REF			X	X			
10	28-16294-1	. . Bracket	1			X	X			
20	28-16283-4	. . Spring	1			X	X			
30	28-16284-1	. . Attach Bracket	1			X	X			
40	NAS66032	. Bolt	1			X	X			
40	AN3-4A	. Bolt (Superseded by NAS66032)	1			X	X			
50	NAS1149F0332P	. Washer	2			X	X			
50	AN960-10L	. Washer (Alternate)	2			X	X			
60	MS20364-1032	. Nut	1			X	X			
60	AN364-1032	. Nut (Alternate)	1			X	X			
–	28-16293-2	Bias Spring Installation Cyclic Lateral Control	REF			X	X			
70	28-16290-2	. Bracket	1			X	X			
80	28-16283-2	. Spring	1			X	X			
90	28-16291-1	. Plate	1			X	X			
100	MS27039-0806	. Screw	2			X	X			
110	NAS1149FN816P	. Washer	2			X	X			
110	AN960-8L	. Washer (Alternate)	2			X	X			
120	MS21044N08	. Nut	2			X	X			
120	AN365-832A	. Nut (Superseded by MS21044N08)	2			X	X			

UNCONTROLLED COPY WHEN DOWNLOADED OR PRINTED

Visit www.enstromhelicopter.com for instructions to order an original manual and to register for email notification updates.

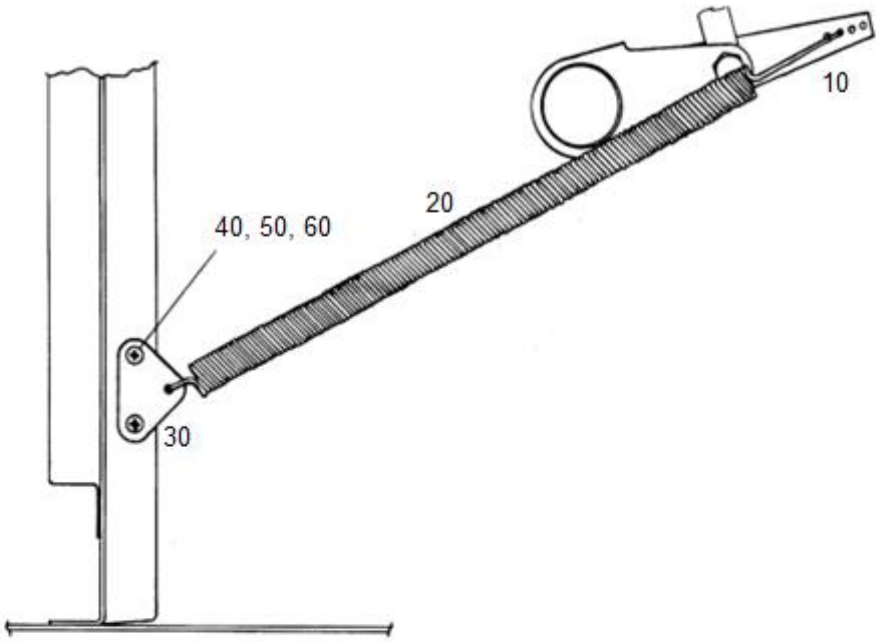

LATERAL BIAS SPRING INSTALLATION

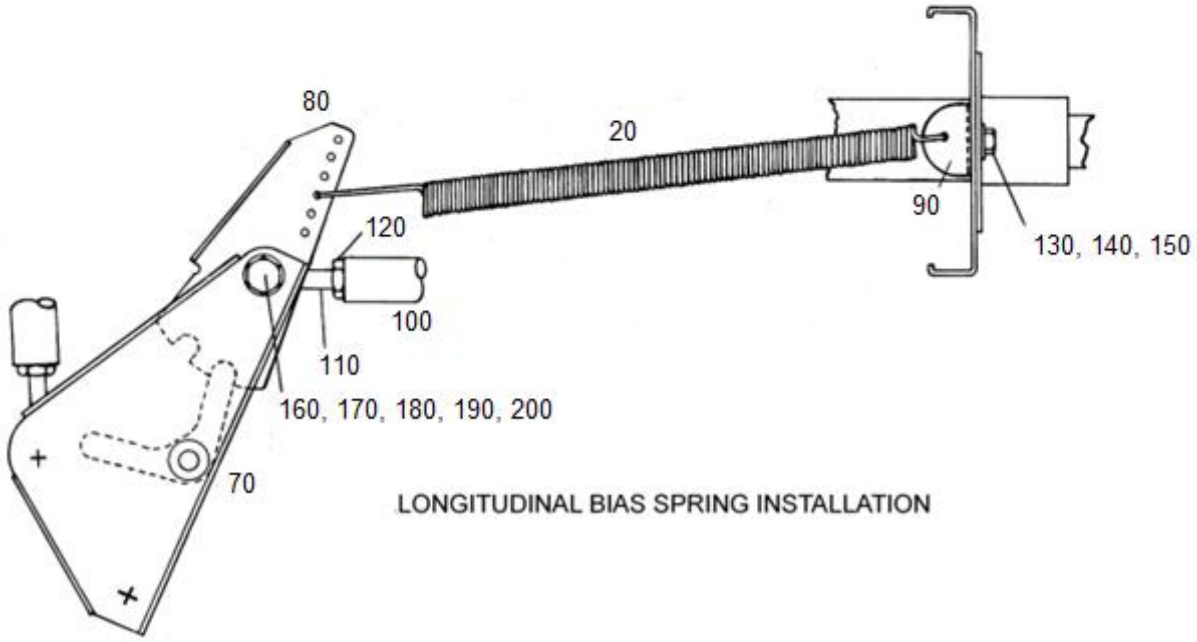

LONGITUDINAL BIAS SPRING INSTALLATION

FIGURE 8-6A. LATERAL AND LONGITUDINAL BIAS SPRING INSTALLATION

UNCONTROLLED COPY WHEN DOWNLOADED OR PRINTED

Visit www.enstromhelicopter.com for instructions to order an original manual and to register for email notification updates.

FIGURE 8-6A. LATERAL AND LONGITUDINAL BIAS SPRING INSTALLATION

ITEM NUMBER	PART NUMBER	DESCRIPTION	QTY PER ASSY	MODELS AFFECTED						
				F-28A	280	F-28C	280C	F-28F	280F	280FX
–	28-16024	Cyclic Control System Installation	REF			X	X	X	X	X
–	28-16293-2	. Bias Spring Installation Cyclic Lateral Control	REF			X	X			
10	28-16290-2	. . Bracket	1	X	X	X	X	X	X	X
20	28-16283-2	. . Spring	1	X	X	X	X	X	X	X
30	28-16291-1	. . Plate	1	X	X	X	X	X	X	X
40	MS27039-0806	. . Screw	2	X	X	X	X	X	X	X
40	AN525-832R6	. . Screw (Superseded by MS27039-0806)	2	X	X	X	X	X	X	X
50	NAS1149FN816P	. . Washer	2	X	X	X	X	X	X	X
50	AN960-8L	. . Washer (Alternate)	2	X	X	X	X	X	X	X
60	MS21044N08	. . Nut	2	X	X	X	X	X	X	X
60	AN365-832A	. . Nut (Superseded by MS21044N08)	2	X	X	X	X	X	X	X
70	28-16160-7	. Bellcrank	1	X	X	X	X	X	X	X
80	28-16294-13	. Bracket	1	X	X	X	X	X	X	X
80	28-16294-1	. Bracket (Replaced by 28-16294-13)	1	X	X	X	X	X	X	X
90	28-16284-1	. Bracket	1	X	X	X	X	X	X	X
100	28-16155-4	. Push-Pull Rod	1	X	X	X	X	X	X	X
110	HMVV-5M	. Rod End	1	X	X	X	X	X	X	X
120	AN316-5R	. Nut	1	X	X	X	X	X	X	X
–	28-16637-11	. Bracket	1			X	X	X	X	X
–	28-16292-11	. Spring	1			X	X	X	X	X
130	NAS6603D2	. Bolt	1	X	X	X	X	X	X	X
130	AN3-4A	. Bolt (Superseded by NAS6603D2)	1	X	X	X	X	X	X	X
140	NAS1149F0332P	. Washer	2	X	X	X	X	X	X	X
140	AN960-10L	. Washer (Alternate)	2	X	X	X	X	X	X	X
150	MS21083N3	. Nut	1	X	X	X	X	X	X	X
150	AN364-1032A	. Nut (Superseded by MS21083N3)	1	X	X	X	X	X	X	X

UNCONTROLLED COPY WHEN DOWNLOADED OR PRINTED

Visit www.enstromhelicopter.com for instructions to order an original manual and to register for email notification updates.

FIGURE 8-6A. LATERAL AND LONGITUDINAL BIAS SPRING INSTALLATION

ITEM NUMBER	PART NUMBER	DESCRIPTION	QTY PER ASSY	MODELS AFFECTED						
				F-28A	280	F-28C	280C	F-28F	280F	280FX
160	NAS6605D11	. Bolt	1	X	X	X	X	X	X	X
160	AN5-11	. Bolt (Superseded by NAS6605D11)	1	X	X	X	X	X	X	X
170	NAS1149F0563P	. Washer	A/R	X	X	X	X	X	X	X
170	AN960-516	. Washer (Alternate)	A/R	X	X	X	X	X	X	X
180	AN916-516L	. Washer	A/R	X	X	X	X	X	X	X
190	MS17825-5	. Nut	1	X	X	X	X	X	X	X
190	F12NE-4753-054	. Nut (Superseded by MS17825-5)	1	X	X	X	X	X	X	X
200	MS24665-151	. Cotter Pin	1	X	X	X	X	X	X	X
200	AN381-2-8	. Cotter Pin (Superseded by MS24665-151)	1	X	X	X	X	X	X	X

UNCONTROLLED COPY WHEN DOWNLOADED OR PRINTED

Visit www.enstromhelicopter.com for instructions to order an original manual and to register for email notification updates.

INTENTIONALLY LEFT BLANK

UNCONTROLLED COPY WHEN DOWNLOADED OR PRINTED

Visit www.enstromhelicopter.com for instructions to order an original manual and to register for email notification updates.

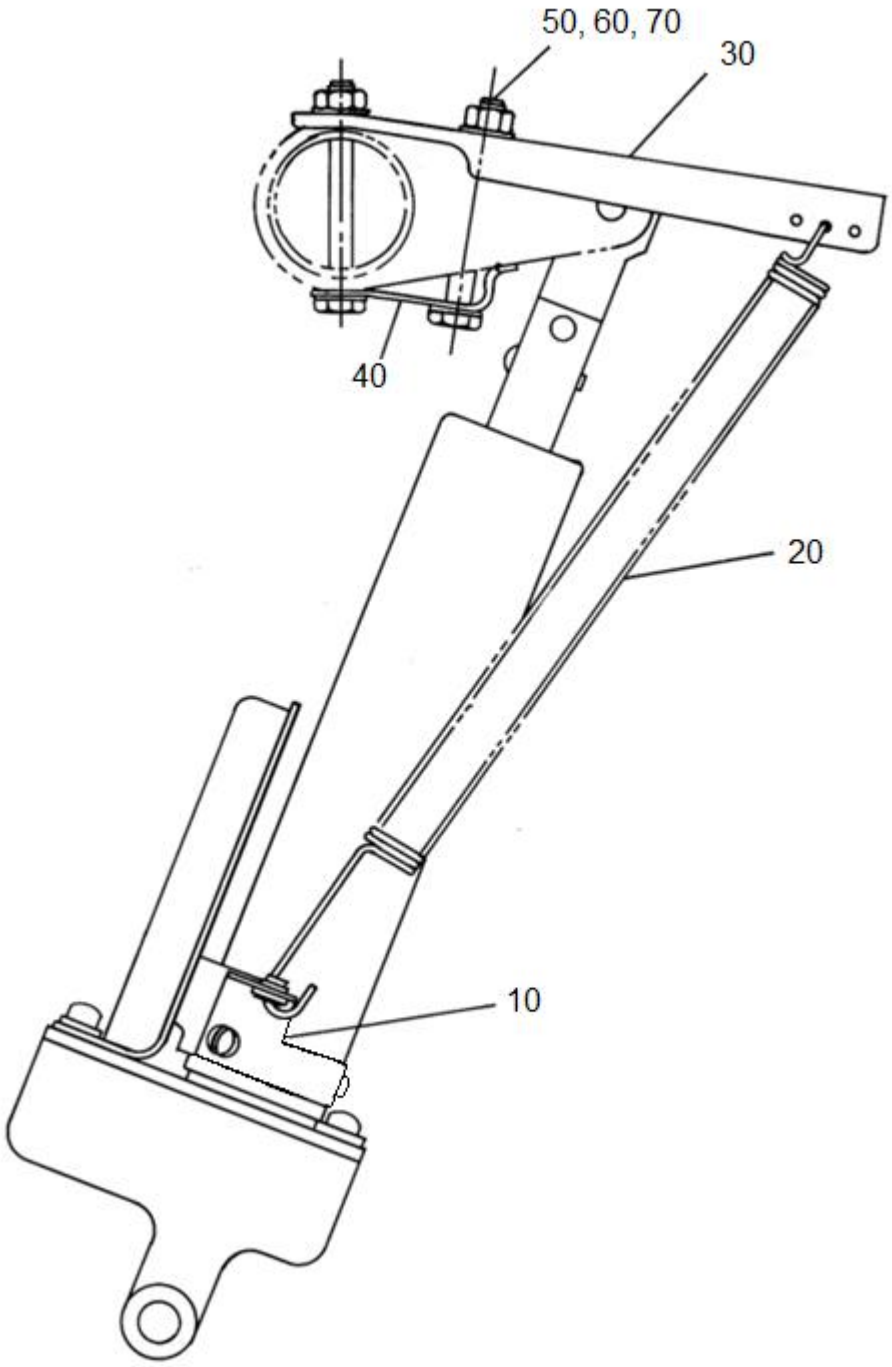

FIGURE 8-7. LATERAL TRIM WITH BIAS SPRING INSTALLATION

UNCONTROLLED COPY WHEN DOWNLOADED OR PRINTED

Visit www.enstromhelicopter.com for instructions to order an original manual and to register for email notification updates.

FIGURE 8-7. LATERAL TRIM WITH BIAS SPRING INSTALLATION

ITEM NUMBER	PART NUMBER	DESCRIPTION	QTY PER ASSY	MODELS AFFECTED						
				F-28A	280	F-28C	280C	F-28F	280F	280FX
–	28-16618-103	Lateral Spring Housing Assembly	REF			X	X	X	X	X
10♦	28-162043-1	. Bracket Assembly - Spring	1			X	X	X	X	X
–10	28-162041-1	. Bracket Assembly (Left Hand) (Inactive) (Superseded by 28-162043-1)	1			X	X	X	X	X
–10	28-162041-2	. Bracket Assembly (Right Hand) (Inactive) (Superseded by 28-162043-1)	1			X	X	X	X	X
20*♦	28-16283-4	. . Spring	2			X	X	X	X	X
30*♦	28-162042-11	. . Bracket Bias Spring	1			X	X	X	X	X
40*♦	28-162040-11	. . Clip	1			X	X	X	X	X
50*♦	NAS6603-24	. . Bolt	2			X	X	X	X	X
50*♦	AN3-17A	. . Bolt (Superseded by NAS6603-24)	2			X	X	X	X	X
60*♦	NAS1149F0332P	. . Washer	4			X	X	X	X	X
60*♦	AN960-10L	. . Washer (Alternate)	4			X	X	X	X	X
70*	MS20364-1032	. . Nut	2			X	X	X	X	X
70*	AN364-1032	. . Nut (Alternate)	2			X	X	X	X	X
–♦	NAS1101-08-6	. Screw	3			X	X	X	X	X
–♦	AN503-8-6	. Screw (Superseded by NAS1101-08-6)	3			X	X	X	X	X
–♦	MS21083N3	. Nut	2			X	X	X	X	X

* 28-16293-2 & -3 installation not required with these components on relocated Lateral Trim System.

♦ Items included in kit 28-01034-1.

UNCONTROLLED COPY WHEN DOWNLOADED OR PRINTED

Visit www.enstromhelicopter.com for instructions to order an original manual and to register for email notification updates.

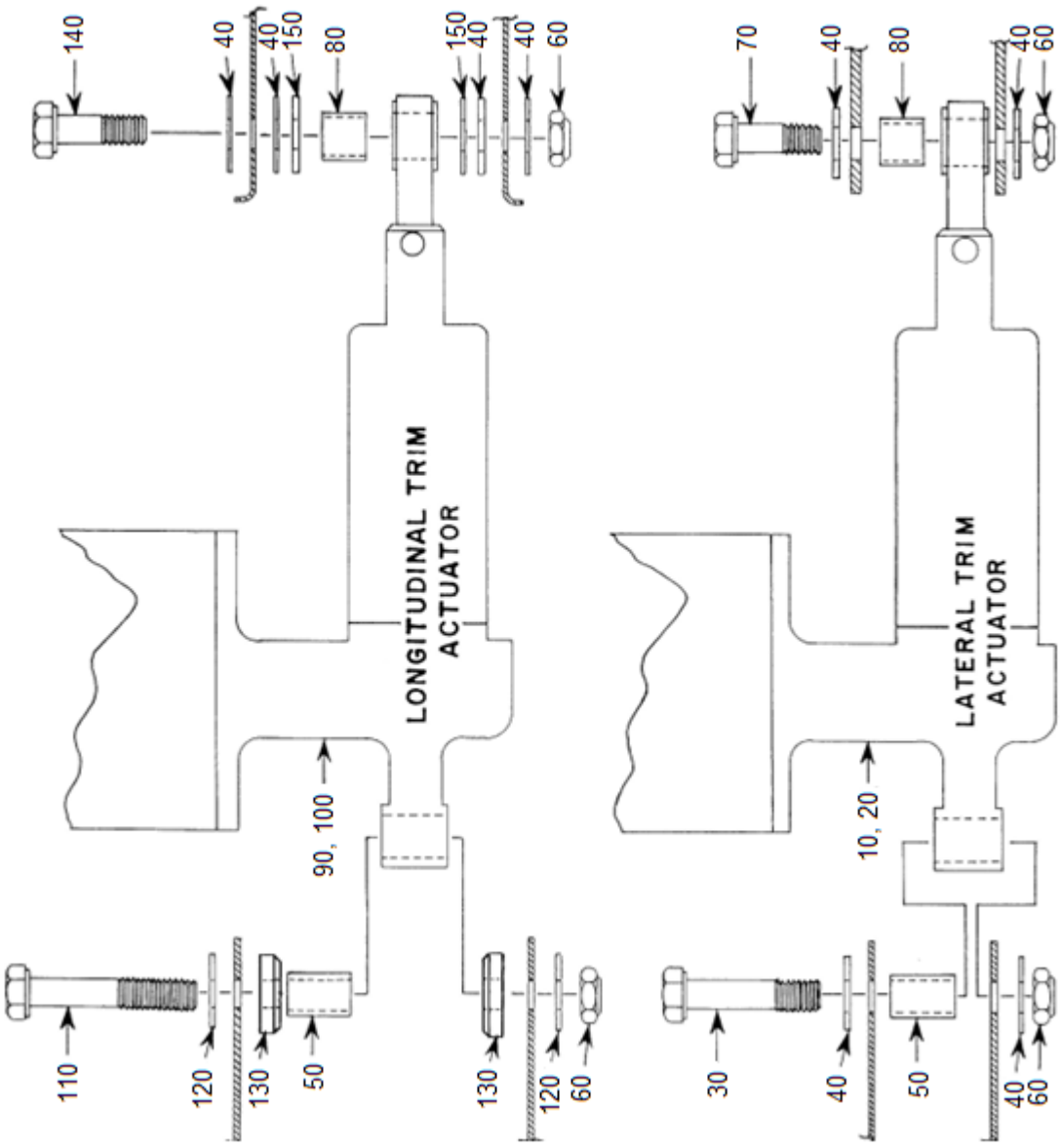

FIGURE 8-8. TRIM ACTUATOR CAPSULE INSTALLATION

UNCONTROLLED COPY WHEN DOWNLOADED OR PRINTED

Visit www.enstromhelicopter.com for instructions to order an original manual and to register for email notification updates.

FIGURE 8-8. TRIM ACTUATOR CAPSULE INSTALLATION

ITEM NUMBER	PART NUMBER	DESCRIPTION	QTY PER ASSY	MODELS AFFECTED						
				F-28A	280	F-28C	280C	F-28F	280F	280FX
–	28-16024	Cyclic Control System Installation	REF	X	X	X	X	X	X	X
10◊	28-16600-115	. Lateral Trim Motor Assy. (24V)	1					X	X	X
10	28-16600-107	. Lateral Trim Motor Assy. (24V) (Superseded by 28-16600-115)	1					X	X	X
10	28-16600-103	. Lateral Trim Motor Assy. (24V) (Superseded by 28-16600-107)	1					X	X	X
20Δ	28-16600-119	. Lateral Trim Motor Assy. (12V)	1					X	X	X
20	28-16600-111	. Lateral Trim Motor Assy. (12V) Superseded by 28-16600-119)	1					X	X	X
20	28-16600-10	. Lateral Trim Motor Assy. (12V) (Superseded by 28-16600-111)	1					X	X	X
20*	28-16600-8	. Lateral Trim Motor Assy. (12V)	1	X	X	X	X			
30	NAS6604-13	. . Bolt	1	X	X	X	X	X	X	X
30	AN4-12A	. . Bolt (Superseded by NAS6604-13)	1	X	X	X	X	X	X	X
40	NAS1149F0432P	. . Washer	8	X	X	X	X	X	X	X
40	AN960-416L	. . Washer (Alternate)	8	X	X	X	X	X	X	X
50	28-16625-1	. . Spacer	2	X	X	X	X	X	X	X
60	MS20364-428	. . Nut	4	X	X	X	X	X	X	X
60	AN364-428	. . Nut (Alternate)	4	X	X	X	X	X	X	X
70	NAS6604-9	. . Bolt	1	X	X	X	X	X	X	X
70	AN4-10A	. . Bolt (Superseded by NAS6604-9)	1	X	X	X	X	X	X	X
80	28-16203-1	. . Spacer	2	X	X	X	X	X	X	X
90◊	28-16600-113	. Longitudinal Trim Motor Assy. (24V)	1					X	X	X
90	28-16600-105	. Longitudinal Trim Motor Assy. (24V) (Superseded by 28-16600-113)	1					X	X	X
90	28-16600-101	. Longitudinal Trim Motor Assy. (24V) (Superseded by 28-16600-105)	1					X	X	X
100Δ	28-16600-117	. Longitudinal Trim Motor Assy. (12V)	1					X	X	X

UNCONTROLLED COPY WHEN DOWNLOADED OR PRINTED

Visit www.enstromhelicopter.com for instructions to order an original manual and to register for email notification updates.

FIGURE 8-8. TRIM ACTUATOR CAPSULE INSTALLATION

ITEM NUMBER	PART NUMBER	DESCRIPTION	QTY PER ASSY	MODELS AFFECTED						
				F-28A	280	F-28C	280C	F-28F	280F	280FX
100	28-16600-109	. Longitudinal Trim Motor Assy. (12V) (Superseded by 28-16600-117)	1					X	X	X
100	28-16600-9	. Longitudinal Trim Motor Assy. (12V) (Superseded by 28-16600-109)	1					X	X	X
100**	28-16600-7	. Longitudinal Trim Motor Assy. (12V)	1	X	X	X	X			
110	NAS6604-23	. . Bolt	1	X	X	X	X	X	X	X
110	AN4-17A	. . Bolt (Superseded by NAS6604-23)	1	X	X	X	X	X	X	X
120	ECD050-11	. . Washer	2	X	X	X	X	X	X	X
120	1/4 Harper	. . Washer (Alternate)	2	X	X	X	X	X	X	X
130	28-16211-1	. . Spacer	2	X	X	X	X	X	X	X
140	NAS6604-11	. . Bolt	1	X	X	X	X	X	X	X
140	AN4-11A	. . Bolt (Superseded by NAS6604-11)	1	X	X	X	X	X	X	X
150	NAS1149F0463P	. . Washer	2	X	X	X	X	X	X	X
150	AN960-416	. . Washer (Alternate)	2	X	X	X	X	X	X	X

* Replaced by 28-16600-119.

** Replaced by 28-16600-117.

◊ Complies with SDB 0110, latest revision, as the assembly is based on components established in kit 28-01063-1 (aircraft modified IAW SDB 0110, latest revision, meet the required action stated in FAA AD 2012-11-05.

Δ Applies to F-28F models equipped with a 12 volt D.C. system with trim relays (S/N 815 only). Previous note (◊) is also applicable.

UNCONTROLLED COPY WHEN DOWNLOADED OR PRINTED

Visit www.enstromhelicopter.com for instructions to order an original manual and to register for email notification updates.

INTENTIONALLY LEFT BLANK

UNCONTROLLED COPY WHEN DOWNLOADED OR PRINTED

Visit www.enstromhelicopter.com for instructions to order an original manual and to register for email notification updates.

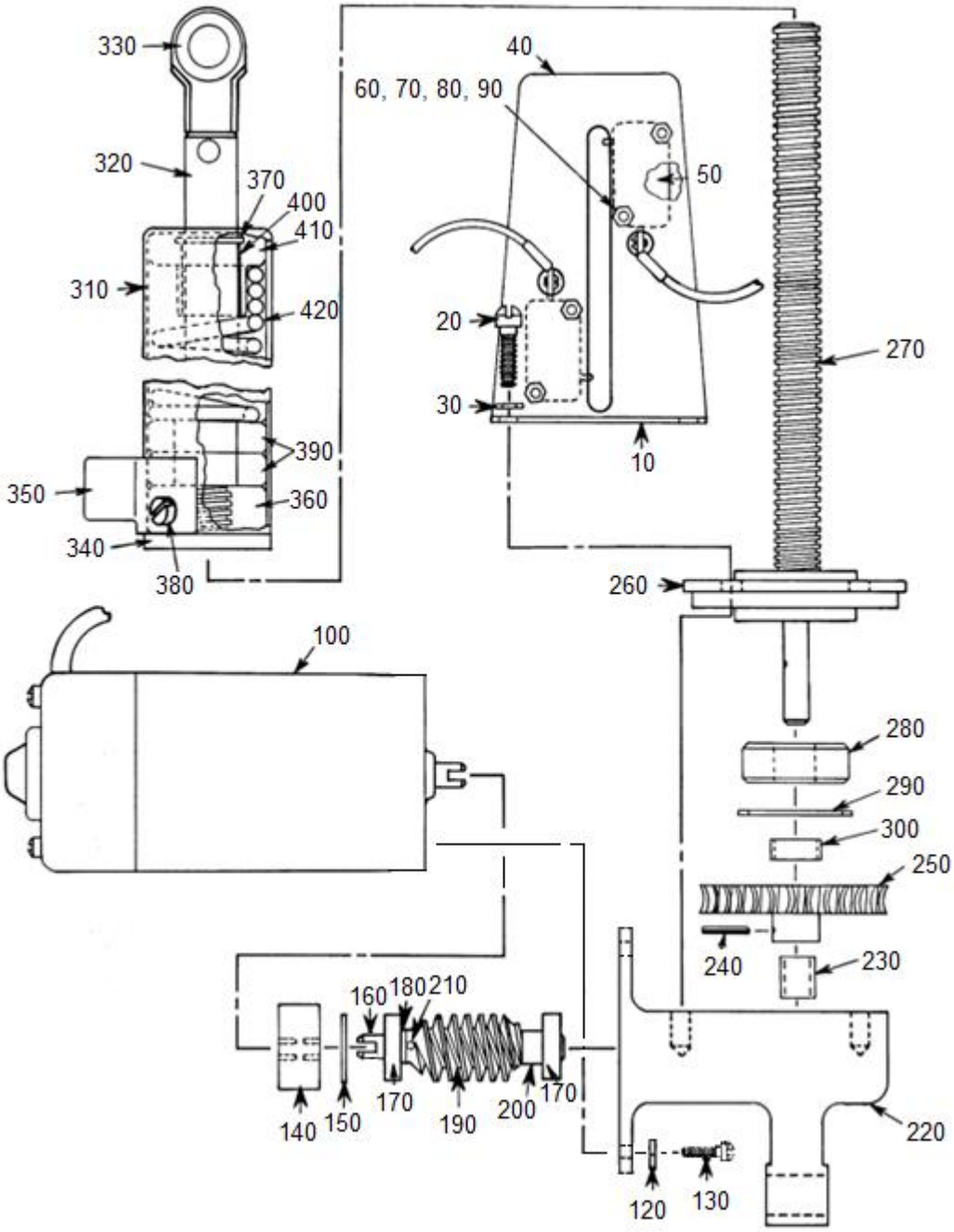

FIGURE 8-9. LATERAL TRIM ASSEMBLY

UNCONTROLLED COPY WHEN DOWNLOADED OR PRINTED

Visit www.enstromhelicopter.com for instructions to order an original manual and to register for email notification updates.

FIGURE 8-9. LATERAL TRIM ASSEMBLY

ITEM NUMBER	PART NUMBER	DESCRIPTION	QTY PER ASSY	MODELS AFFECTED						
				F-28A	280	F-28C	280C	F-28F	280F	280FX
–◊	28-16600-115	Actuator Assembly (24V)	REF	X	X	X	X	X	X	X
–Δ	28-16600-119	Actuator Assembly (12V)	REF	X	X	X	X	X	X	X
–	28-16636-5	. Switch Assembly	1	X	X	X	X	X	X	X
–	28-16636-3	. Switch Assembly (Replaced by 28-16636-5)	1	X	X	X	X	X	X	X
10*♦	28-16614-5	. . Bracket Switch	1	X	X	X	X	X	X	X
10*	28-16614-3	. . Bracket Switch (Replaced by 28-16614-5)	1					X	X	X
–10	28-16614-1	. . Bracket Switch	1	X	X	X	X	X	X	
20♦	NAS1101-3-10	. Screw	2	X	X	X	X	X	X	X
20♦	AN502-10-10	. Screw (Superseded by NAS1101-3-10)	2	X	X	X	X	X	X	X
30▲	NAS1149F0363P	. Washer	4	X	X	X	X	X	X	X
30▲	AN960-10	. Washer (Alternate)	4	X	X	X	X	X	X	X
–	NAS1101-3-8	. Screw	2	X	X	X	X	X	X	X
–	AN502-10-8	. Screw (Superseded by NAS1101-3-8)	2	X	X	X	X	X	X	X
40*♦	28-16624-11	. . Shield Switch	1	X	X	X	X	X	X	X
40*	28-16624-3	. . Shield Switch (Replaced by 28-16624-11)	1					X	X	X
–40	28-16624-1	. . Shield Switch	1	X	X	X	X			
50	V3-1	. . Micro Switch	2	X	X	X	X	X	X	X
60♦	MS35206-219	. . Screw	4	X	X	X	X	X	X	X
60	AN515-4R12	. . Screw (Superseded by MS35206-219)	4	X	X	X	X	X	X	X
70	NAS1149FN416P	. . Washer	4	X	X	X	X	X	X	X
70	AN960-4L	. . Washer (Alternate)	4	X	X	X	X	X	X	X
80	MS35338-40	. . Lock Washer	4	X	X	X	X	X	X	X
80	AN935-4	. . Lock Washer (Alternate)	4	X	X	X	X	X	X	X
90	MS35649-242	. . Nut	4	X	X	X	X	X	X	X
90	AN340-4	. . Nut (Superseded by MS35649-242)	4	X	X	X	X	X	X	X
100	210A155	. Motor (24V)	1					X	X	X

UNCONTROLLED COPY WHEN DOWNLOADED OR PRINTED

Visit www.enstromhelicopter.com for instructions to order an original manual and to register for email notification updates.

FIGURE 8-9. LATERAL TRIM ASSEMBLY

ITEM NUMBER	PART NUMBER	DESCRIPTION	QTY PER ASSY	MODELS AFFECTED						
				F-28A	280	F-28C	280C	F-28F	280F	280FX
–110	210A249	. Motor (12V)	1					X	X	X
–110A	28-16621-1	. Motor (12V)	1	X	X	X	X	X	X	X
120	NAS1149FN816P	. Washer	2	X	X	X	X	X	X	X
130	NAS1101-08-8	. Screw	2	X	X	X	X	X	X	X
130	AN503-8-8	. Screw (Superseded by NAS1101-08-8)	2	X	X	X	X	X	X	X
–▲	MS35338-43	. Lock Washer	2	X	X	X	X	X	X	X
–▲	AN935-10	. Lock Washer (Alternate)	2	X	X	X	X	X	X	X
–▲	MS35650-302	. Nut	2	X	X	X	X	X	X	X
–▲	AN345-10	. Nut (Superseded by MS35650-302)	2	X	X	X	X	X	X	X
140	28-16633-1	. Coupling	1	X	X	X	X	X	X	X
140	J3459-8	. Coupling (Replaced by 28-16633-1)	1	X	X	X	X	X	X	X
150	N5000-62-PP	. Snap Ring	1	X	X	X	X	X	X	X
–	28-16620-2	. Worm & Shaft Assembly	1	X	X	X	X	X	X	X
160	28-16619-1	. . Shaft	1	X	X	X	X	X	X	X
170	ECD066-1	. . Bearing	2	X	X	X	X	X	X	X
170	Z9R4X3	. . Bearing (Superseded by ECD066-1)	2	X	X	X	X	X	X	X
180	28-16610-1	. . Spacer	1	X	X	X	X	X	X	X
190	HLUH	. . Worm	1	X	X	X	X	X	X	X
200	28-16609-1	. . Spacer	1	X	X	X	X	X	X	X
210	MS16562-211	. . Spring Pin	1	X	X	X	X	X	X	X
210	GX-5	. . Roll Pin (Alternate)	1	X	X	X	X	X	X	X
220	28-16630-4	. Gear Housing	1	X	X	X	X	X	X	X
220	28-16630-2	. Gear Housing R.H. (Superseded by 28-16630-4)	1	X	X	X	X	X	X	X
230	B46-2 1/2	. Bearing	1	X	X	X	X	X	X	X
–	28-16617-2	. Acme Screw Shaft Assembly	1	X	X	X	X	X	X	X
240	MS16562-213	. . Roll Pin	1	X	X	X	X	X	X	X
250	28-16635-1	. . Worm Gear	1	X	X	X	X	X	X	X

UNCONTROLLED COPY WHEN DOWNLOADED OR PRINTED

Visit www.enstromhelicopter.com for instructions to order an original manual and to register for email notification updates.

FIGURE 8-9. LATERAL TRIM ASSEMBLY

ITEM NUMBER	PART NUMBER	DESCRIPTION	QTY PER ASSY	MODELS AFFECTED						
				F-28A	280	F-28C	280C	F-28F	280F	280FX
260	28-16632-1	. . Cover Gear Housing	1	X	X	X	X	X	X	X
270	28-16607-1	. . Acme Screw Shaft	1	X	X	X	X	X	X	X
–	4166053-11	. . Shim	A/R	X	X	X	X	X	X	X
–	4166053-13	. . Shim	A/R	X	X	X	X	X	X	X
–	4166053-15	. . Shim	A/R	X	X	X	X	X	X	X
280	ECD034-11	. . Bearing	1	X	X	X	X	X	X	X
280	Z99R6	. . Bearing (Superseded by ECD034-11)	1	X	X	X	X	X	X	X
290	N5000-87	. . Snap Ring	1	X	X	X	X	X	X	X
290	N5000-87-PP	. . Snap Ring (Superseded by N5000-87)	1	X	X	X	X	X	X	X
300	28-16608-1	. . Spacer	1	X	X	X	X	X	X	X
310	28-16618-103	. Spring Housing Assembly	1	X	X	X	X	X	X	X
310	28-16618-9	. Spring Housing Assembly (Replaced by 28-16618-103)	1	X	X	X	X	X	X	X
310	28-16618-6	. Spring Housing Assembly (Replaced by 28-16618-9)	1	X	X	X	X			
320	28-16616-7	. . Shaft Assembly	1	X	X	X	X	X	X	X
320	28-16616-5	. . Shaft Assembly (Replaced by 28-16616-7)	1	X	X	X	X	X	X	X
–	28-16612-5	. . . Rod End Assembly	1	X	X	X	X	X	X	X
330	28-16201-1	. . . . Rod End Bearing	2	X	X	X	X	X	X	X
340	28-16628-1	. . Snubber Ring	1	X	X	X	X	X	X	X
350♦	28-16613-3	. . Micro Switch Actuator	1	X	X	X	X	X	X	X
350	28-16613-1	. . Micro Switch Actuator (Replaced by 28-16613-3)	1	X	X	X	X	X	X	X
360	28-16611-15	. . Acme Nut	1	X	X	X	X	X	X	X
360	28-16611-13	. . Acme Nut (Replaced by 28-16611-15)	1	X	X	X	X	X	X	X
360	28-16611-1	. . Acme Nut (Replaced by 28-16611-13)	1	X	X	X	X	X	X	X
370	N5108-56-PP	. . Snap Ring	1	X	X	X	X	X	X	X
–♦	28-162043-3	. . Bracket Assembly	1	X	X	X	X	X	X	X
–	28-162043-1	. . Bracket Assembly	1	X	X	X	X	X	X	X

UNCONTROLLED COPY WHEN DOWNLOADED OR PRINTED

Visit www.enstromhelicopter.com for instructions to order an original manual and to register for email notification updates.

FIGURE 8-9. LATERAL TRIM ASSEMBLY

ITEM NUMBER	PART NUMBER	DESCRIPTION	QTY PER ASSY	MODELS AFFECTED						
				F-28A	280	F-28C	280C	F-28F	280F	280FX
380♦	NAS1101-08-8	. . Screw	3	X	X	X	X	X	X	X
380♦	AN503-8-8	. . Screw (Superseded by NAS1101-08-8)	3	X	X	X	X	X	X	X
380	NK 500-8-5	. . Screw (Superseded by AN503-8-8)	3	X	X	X	X			
390	28-16626-1	. . Spacer	1	X	X	X	X	X	X	X
400	09-DU-12	. . Bearing	1	X	X	X	X	X	X	X
410	28-16604-1	. . Retainer	1	X	X	X	X	X	X	X
420	28-16601-1	. . Spring	1	X	X	X	X	X	X	X

* Used on 2600# G.W. aircraft.

♦ Items included in kit 28-01063-1.

▲ Items used with 28-16621-1.

◊ Complies with SDB 0110, latest revision, as the assembly is based on components established in kit 28-01063-1 (aircraft modified IAW SDB 0110, latest revision, meet the required action stated in FAA AD 2012-11-05.

Δ Applies to F-28F models equipped with a 12 volt D.C. system with trim relays (S/N 815 only). Previous note (◊) is also applicable.

UNCONTROLLED COPY WHEN DOWNLOADED OR PRINTED

Visit www.enstromhelicopter.com for instructions to order an original manual and to register for email notification updates.

INTENTIONALLY LEFT BLANK

UNCONTROLLED COPY WHEN DOWNLOADED OR PRINTED

Visit www.enstromhelicopter.com for instructions to order an original manual and to register for email notification updates.

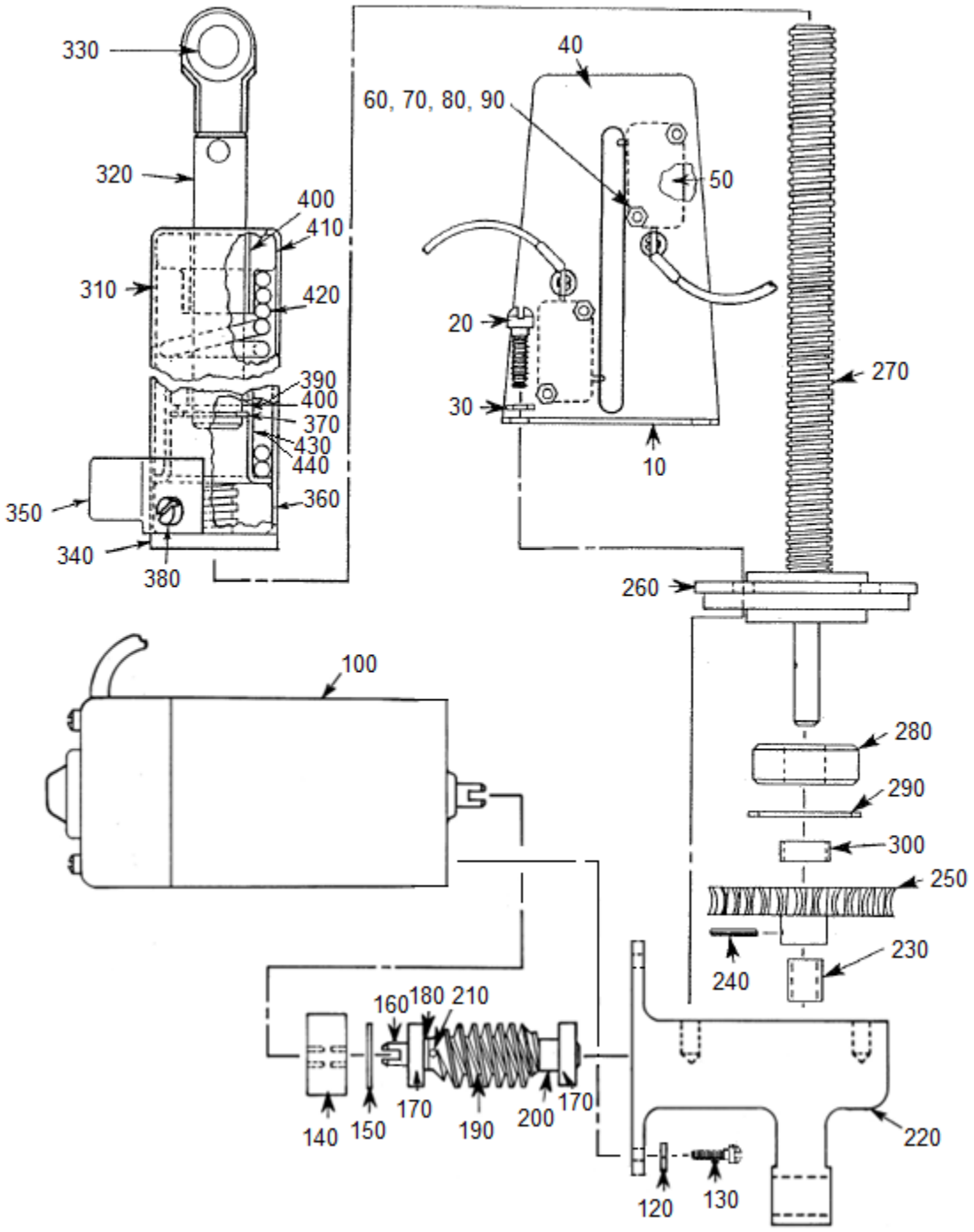

FIGURE 8-10. LONGITUDINAL TRIM ASSEMBLY

UNCONTROLLED COPY WHEN DOWNLOADED OR PRINTED

Visit www.enstromhelicopter.com for instructions to order an original manual and to register for email notification updates.

FIGURE 8-10. LONGITUDINAL TRIM ASSEMBLY

ITEM NUMBER	PART NUMBER	DESCRIPTION	QTY PER ASSY	MODELS AFFECTED						
				F-28A	280	F-28C	280C	F-28F	280F	280FX
–◊	28-16600-113	Actuator Assembly (24V)	REF	X	X	X	X	X	X	X
–Δ	28-16600-117	Actuator Assembly (12V)	REF	X	X	X	X	X	X	X
–	28-16636-5	. Switch Assembly	1	X	X	X	X	X	X	X
–	28-16636-3	. Switch Assembly (Replaced by 28-16636-5)	1	X	X	X	X	X	X	X
10*♦	28-16614-5	. . Bracket Switch	1	X	X	X	X	X	X	X
10*	28-16614-3	. . Bracket Switch (Replaced by 28-16614-5)	1					X	X	X
–10	28-16614-1	. . Bracket Switch	1	X	X	X	X			
20♦	NAS1101-3-10	. Screw	2	X	X	X	X	X	X	X
20♦	AN502-10-10	. Screw (Superseded by NAS1101-3-10)	2	X	X	X	X	X	X	X
30▲	NAS1149F0363P	. Washer	4	X	X	X	X	X	X	X
30▲	AN960-10	. Washer (Alternate)	4	X	X	X	X	X	X	X
–	NAS1101-3-8	. Screw	2	X	X	X	X	X	X	X
–	AN502-10-8	. Screw (Superseded by NAS1101-3-8)	2	X	X	X	X	X	X	X
40*♦	28-16624-11	. . Shield Switch	1	X	X	X	X	X	X	X
40*	28-16624-3	. . Shield Switch (Replaced by 28-16624-11)	1					X	X	X
–40	28-16624-1	. . Shield Switch	1	X	X	X	X			
50	V3-1	. . Micro Switch	2	X	X	X	X	X	X	X
60♦	MS35206-219	. . Screw	4	X	X	X	X	X	X	X
60	AN515-4R12	. . Screw (Superseded by MS35206-219)	4	X	X	X	X	X	X	X
70	NAS1149FN416P	. . Washer	4	X	X	X	X	X	X	X
70	AN960-4L	. . Washer (Alternate)	4	X	X	X	X	X	X	X
80	MS35338-40	. . Lock Washer	4	X	X	X	X	X	X	X
80	AN935-4	. . Lock Washer (Alternate)	4	X	X	X	X	X	X	X
90	MS35649-242	. . Nut	4	X	X	X	X	X	X	X
90	AN340-4	. . Nut (Superseded by MS35649-242)	4	X	X	X	X	X	X	X
100	210A155	. Motor (24V)	1					X	X	X

UNCONTROLLED COPY WHEN DOWNLOADED OR PRINTED

Visit www.enstromhelicopter.com for instructions to order an original manual and to register for email notification updates.

FIGURE 8-10. LONGITUDINAL TRIM ASSEMBLY

ITEM NUMBER	PART NUMBER	DESCRIPTION	QTY PER ASSY	MODELS AFFECTED						
				F-28A	280	F-28C	280C	F-28F	280F	280FX
–110	210A249	. Motor (12V)	1					X	X	X
–110A	28-16621-1	. Motor (12V)	1	X	X	X	X	X	X	X
120	NAS1149FN816P	. Washer	2	X	X	X	X	X	X	X
130	NAS1101-08-8	. Screw	2	X	X	X	X	X	X	X
130	AN503-8-8	. Screw (Superseded by NAS1101-08-8)	2	X	X	X	X	X	X	X
–▲	MS35338-43	. Lock Washer	2	X	X	X	X	X	X	X
–▲	AN935-10	. Lock Washer (Alternate)	2	X	X	X	X	X	X	X
–▲	MS35650-302	. Nut	2	X	X	X	X	X	X	X
–▲	AN345-10	. Nut (Superseded by MS35650-302)	2	X	X	X	X	X	X	X
140	28-16633-1	. Coupling	1	X	X	X	X	X	X	X
140	J3459-8	. Coupling (Replaced by 28-16633-1)	1	X	X	X	X	X	X	X
150	N5000-62-PP	. Snap Ring	1	X	X	X	X	X	X	X
–	28-16620-1	. Worm & Shaft Assembly	1	X	X	X	X	X	X	X
160	28-16619-1	. . Shaft	1	X	X	X	X	X	X	X
170	ECD066-1	. . Bearing	2	X	X	X	X	X	X	X
170	Z9R4X3	. . Bearing (Superseded by ECD066-1)	2	X	X	X	X	X	X	X
180	28-16610-1	. . Spacer	1	X	X	X	X	X	X	X
190	HDUH	. . Worm	1	X	X	X	X	X	X	X
200	28-16609-1	. . Spacer	1	X	X	X	X	X	X	X
210	MS16562-211	. . Spring Pin	1	X	X	X	X	X	X	X
210	GX-5	. . Roll Pin (Alternate)	1	X	X	X	X	X	X	X
220	28-16630-3	. Gear Housing	1	X	X	X	X	X	X	X
220	28-16630-1	. Gear Housing L.H. (Superseded by 28-16630-3)	1	X	X	X	X	X	X	X
230	B46-2 1/2	. Bearing	1	X	X	X	X	X	X	X
–	28-16617-1	. Acme Screw Shaft Assembly	1	X	X	X	X	X	X	X
240	MS16562-213	. . Roll Pin	1	X	X	X	X	X	X	X
250	28-16623-1	. . Worm Gear	1	X	X	X	X	X	X	X

UNCONTROLLED COPY WHEN DOWNLOADED OR PRINTED

Visit www.enstromhelicopter.com for instructions to order an original manual and to register for email notification updates.

FIGURE 8-10. LONGITUDINAL TRIM ASSEMBLY

ITEM NUMBER	PART NUMBER	DESCRIPTION	QTY PER ASSY	MODELS AFFECTED						
				F-28A	280	F-28C	280C	F-28F	280F	280FX
260	28-16632-1	. . Cover Gear Housing	1	X	X	X	X	X	X	X
270	28-16607-1	. . Acme Screw Shaft	1	X	X	X	X	X	X	X
–	4166053-11	. . Shim	A/R	X	X	X	X	X	X	X
–	4166053-13	. . Shim	A/R	X	X	X	X	X	X	X
–	4166053-15	. . Shim	A/R	X	X	X	X	X	X	X
280	ECD034-11	. . Bearing	1	X	X	X	X	X	X	X
280	Z99R6	. . Bearing (Superseded by ECD034-11)	1	X	X	X	X	X	X	X
290	N5000-87	. . Snap Ring	1	X	X	X	X	X	X	X
290	N5000-87-PP	. . Snap Ring (Superseded by N5000-87)	1	X	X	X	X	X	X	X
300	28-16608-1	. . Spacer	1	X	X	X	X	X	X	X
310	28-16618-105	. Spring Housing Assembly	1	X	X	X	X	X	X	X
310	28-16618-101	. Spring Housing Assembly (Replaced by 28-16618-105)	1	X	X	X	X	X	X	X
310	28-16618-7	. Housing Assembly (Replaced by 28-16618-101)	1					X	X	X
320	28-16616-9	. . Shaft Assembly	1	X	X	X	X	X	X	X
320	28-16616-1	. . Shaft Assembly (Replaced by 28-16616-9)	1	X	X	X	X	X	X	X
–	28-16612-5	. . . Rod Assembly	1	X	X	X	X	X	X	X
330	28-16201-1	. . . . Rod End Bearing	2	X	X	X	X	X	X	X
340	28-16628-1	. . Rubber Snubber	1	X	X	X	X	X	X	X
350♦	28-16613-3	. . Micro Switch Actuator	1	X	X	X	X	X	X	X
350	28-16613-1	. . Micro Switch Actuator (Replaced by 28-16613-3)	1	X	X	X	X	X	X	X
360	28-16611-15	. . Acme Nut	1	X	X	X	X	X	X	X
360	28-16611-13	. . Acme Nut (Replaced by 28-16611-15)	1	X	X	X	X	X	X	X
360	28-16611-1	. . Acme Nut (Replaced by 28-16611-13)	1	X	X	X	X	X	X	X
370	N5108-56-PP	. . Snap Ring	1	X	X	X	X	X	X	X
380♦	NAS1101-08-6	. . Screw	3	X	X	X	X	X	X	X

UNCONTROLLED COPY WHEN DOWNLOADED OR PRINTED

Visit www.enstromhelicopter.com for instructions to order an original manual and to register for email notification updates.

FIGURE 8-10. LONGITUDINAL TRIM ASSEMBLY

ITEM NUMBER	PART NUMBER	DESCRIPTION	QTY PER ASSY	MODELS AFFECTED						
				F-28A	280	F-28C	280C	F-28F	280F	280FX
380♦	AN503-8-6	. . Screw (Superseded by NAS1101-08-6)	3	X	X	X	X	X	X	X
380	NK 500-8-5	. . Screw (Superseded by AN503-8-6)	3	X	X	X	X	X	X	X
390	09-DU-10	. . Bearing	1	X	X	X	X	X	X	X
400	09-DU-12	. . Bearing	2	X	X	X	X	X	X	X
410	28-16604-1	. . Retainer	1	X	X	X	X	X	X	X
420	28-16601-1	. . Spring	1	X	X	X	X	X	X	X
430	28-16603-15	. . Retainer	1					X	X	X
440	28-16603-1	. . Retainer	1	X	X	X	X			

* Used on 2600# G. W. aircraft.

♦ Items included in kit 28-01063-1.

▲ Items used with 28-16621-1.

◊ Complies with SDB 0110, latest revision, as the assembly is based on components established in kit 28-01063-1 (aircraft modified IAW SDB 0110, latest revision, meet the required action stated in FAA AD 2012-11-05.

Δ Applies to F-28F models equipped with a 12 volt D.C. system with trim relays (S/N 815 only). Previous note (◊) is also applicable.

UNCONTROLLED COPY WHEN DOWNLOADED OR PRINTED

Visit www.enstromhelicopter.com for instructions to order an original manual and to register for email notification updates.

INTENTIONALLY LEFT BLANK

UNCONTROLLED COPY WHEN DOWNLOADED OR PRINTED

Visit www.enstromhelicopter.com for instructions to order an original manual and to register for email notification updates.

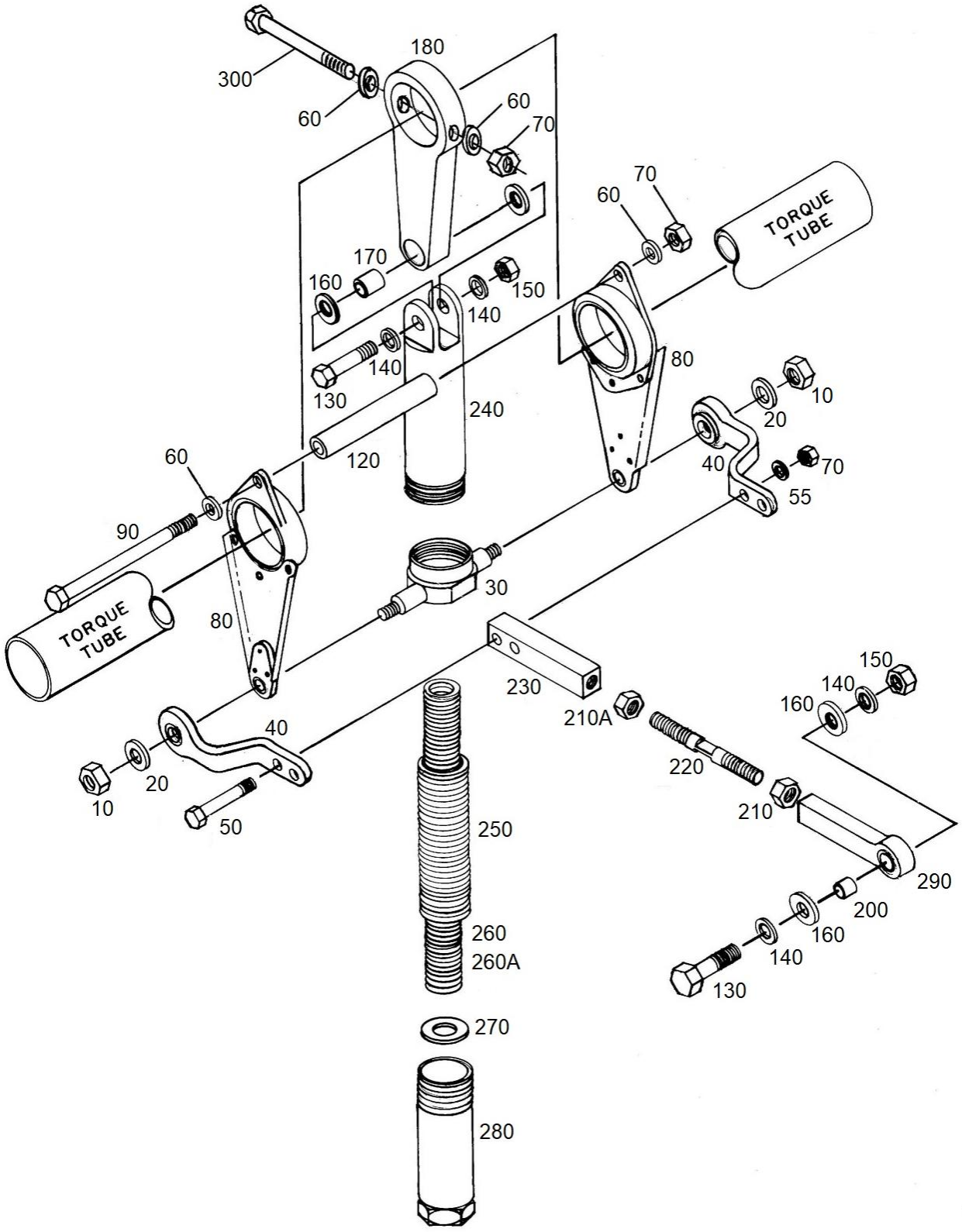

FIGURE 8-11. COLLECTIVE TRIM, SPRING CAPSULE

UNCONTROLLED COPY WHEN DOWNLOADED OR PRINTED

Visit www.enstromhelicopter.com for instructions to order an original manual and to register for email notification updates.

FIGURE 8-11. COLLECTIVE TRIM, SPRING CAPSULE

ITEM NUMBER	PART NUMBER	DESCRIPTION	QTY PER ASSY	MODELS AFFECTED						
				F-28A	280	F-28C	280C	F-28F	280F	280FX
10	AN364-428A	. Nut	2	X	X	X	X	X	X	X
10	MS21083N4	. Nut (Alternate to AN364-428A)	2	X	X	X	X	X	X	X
20	ECD050-25	. Washer	2	X	X	X	X	X	X	X
20	1/4 Harper	. Washer (Superseded by ECD050-25)	2	X	X	X	X	X	X	X
30	28-16232-1	. Pivot Housing	1	X	X	X	X	X	X	X
40††	28-16239-101	. Bracket Assembly	2	X	X	X	X	X	X	X
40∞	28-16239-9	. Bracket Assembly	2	X	X	X	X	X	X	X
40▼	28-16239-5	. Bracket Assembly	2	X	X	X	X	X	X	X
40	28-16239-1	. Bracket (Obsolete)	2	X	X	X	X	X	X	X
50	AN3-10A	. Bolt	2	X	X	X	X	X	X	X
55	NAS1149F0332P	. Washer	2	X	X	X	X	X	X	X
60	NAS1149F0316P	. Washer	4	X	X	X	X	X	X	X
70	MS21083N3	. Nut	4	X	X	X	X	X	X	X
70	AN364-1032A	. Nut (Superseded by MS21083N3)	4	X	X	X	X	X	X	X
80	28-16234-1	. Strap Retainer	2	X	X	X	X	X	X	X
90	AN3-16A	. Bolt	1	X	X	X	X	X	X	X
120	28-16235-11	. Spacer	1	X	X	X	X	X	X	X
120	28-16235-1	. Spacer (Obsolete)	1	X	X	X	X	X	X	X
130	AN4-10A	. Bolt	2	X	X	X	X	X	X	X
140	AN960-416L	. Washer	4	X	X	X	X	X	X	X
140	NAS1149F0432P	. Washer (Alternate to AN960-416L)	4	X	X	X	X	X	X	X
150	AN364-428A	. Nut	2	X	X	X	X	X	X	X
150	MS21083N4	. Nut (Alternate to AN364-428A)	2	X	X	X	X	X	X	X
160	1/4 Harper	. Washer	2	X	X	X	X	X	X	X
160	ECD050-11	. Washer (Alternate to 1/4 Harper)	3	X	X	X	X	X	X	X
170	28-16203-1	. Spacer	1	X	X	X	X	X	X	X
180	28-16233-1	. Bellcrank Assembly	1	X	X	X	X	X	X	X
200	28-16258-1	. Spacer	1	X	X	X	X	X	X	X

UNCONTROLLED COPY WHEN DOWNLOADED OR PRINTED

Visit www.enstromhelicopter.com for instructions to order an original manual and to register for email notification updates.

FIGURE 8-11. COLLECTIVE TRIM, SPRING CAPSULE

ITEM NUMBER	PART NUMBER	DESCRIPTION	QTY PER ASSY	MODELS AFFECTED						
				F-28A	280	F-28C	280C	F-28F	280F	280FX
210	AN316-4L	. Nut	1	X	X	X	X	X	X	X
210A	AN316-4R	. Nut	1	X	X	X	X	X	X	X
220††	28-16236-17	. Tie Rod	1	X	X	X	X	X	X	X
220▼	28-16236-15	. Tie Rod	1	X	X	X	X	X	X	X
220	28-16236-1	. Tie Rod	1	X	X	X	X	X	X	X
230††	28-16237-13	. Link	1	X	X	X	X	X	X	X
230▼	28-16237-11	. Link	1	X	X	X	X	X	X	X
230	28-16237-1	. Link (Obsolete)	1	X	X	X	X	X	X	X
240	28-16230-1	. Spring Housing	1	X	X	X	X	X	X	X
250	28-16229-13	. Spring	1	X	X	X	X	X	X	X
250	28-16229-15	. Spring (Alternate to 28-16229-13)	1	X	X	X	X	X	X	X
250	ECD037-11	. Spring (Alternate to 28-16229-13)	1	X	X	X	X	X	X	X
260A*	28-162004-11	. Spring	1	X	X	X	X	X	X	X
260*	28-16222-1	. Spring	1	X	X	X	X	X	X	X
270	ECD050-15	. Washer	1	X	X	X	X	X	X	X
270	AN960C1216	. Washer (Superseded by ECD050-15)	1	X	X	X	X	X	X	X
280	28-16231-1	. Spring Retainer	1	X	X	X	X	X	X	X
290††	28-16238-7	. Link Assembly	1	X	X	X	X	X	X	X
290▼	28-16238-5	. Link Assembly	1	X	X	X	X	X	X	X
290	28-16238-3	. Link (Complete)	1	X	X	X	X	X	X	X
300	AN3-22A	. Bolt	1	X	X	X	X	X	X	X
–310**	28-16242-901	. Adjustable Rod Assy Kit	1	X	X	X	X	X	X	X
–320	28-16242-1	. . Adjustable Rod Assy	1	X	X	X	X	X	X	X
–330†	28-16242-907	. Adjustable Rod Assy Kit	1	X	X	X	X	X	X	X
–340	28-16242-7	. . Adjustable Rod Assy	1	X	X	X	X	X	X	X
–350Δ	28-16242-5	. Adjustable Rod Assy (Superseded by 28-16242-7)	1	X	X	X	X	X	X	X

* Normally not used on aircraft with Correlators.

UNCONTROLLED COPY WHEN DOWNLOADED OR PRINTED

Visit www.enstromhelicopter.com for instructions to order an original manual and to register for email notification updates.

**	Installed in accordance with SIL0184 Revision 2, or later revision. Kit contains preceding items noted with '▼'. When installed, kit P/N 28-16242-901 becomes P/N 28-16242-1.
†	Installed in accordance with SIL0184, or later revision. Kit contains preceding items noted with '††'. When installed, kit P/N 28-16242-907 becomes P/N 28-16242-7.
∆	Interim assembly for F-28F S/N 831 and 832 and 280FX S/N 2148 – 2163. Eligible for upgrade to 28-16242-7 per SIL0184, current revision.
††	Used with Item –330.
▼	Used with Item –310.
∞	Used with Item –350.

UNCONTROLLED COPY WHEN DOWNLOADED OR PRINTED

Visit www.enstromhelicopter.com for instructions to order an original manual and to register for email notification updates.

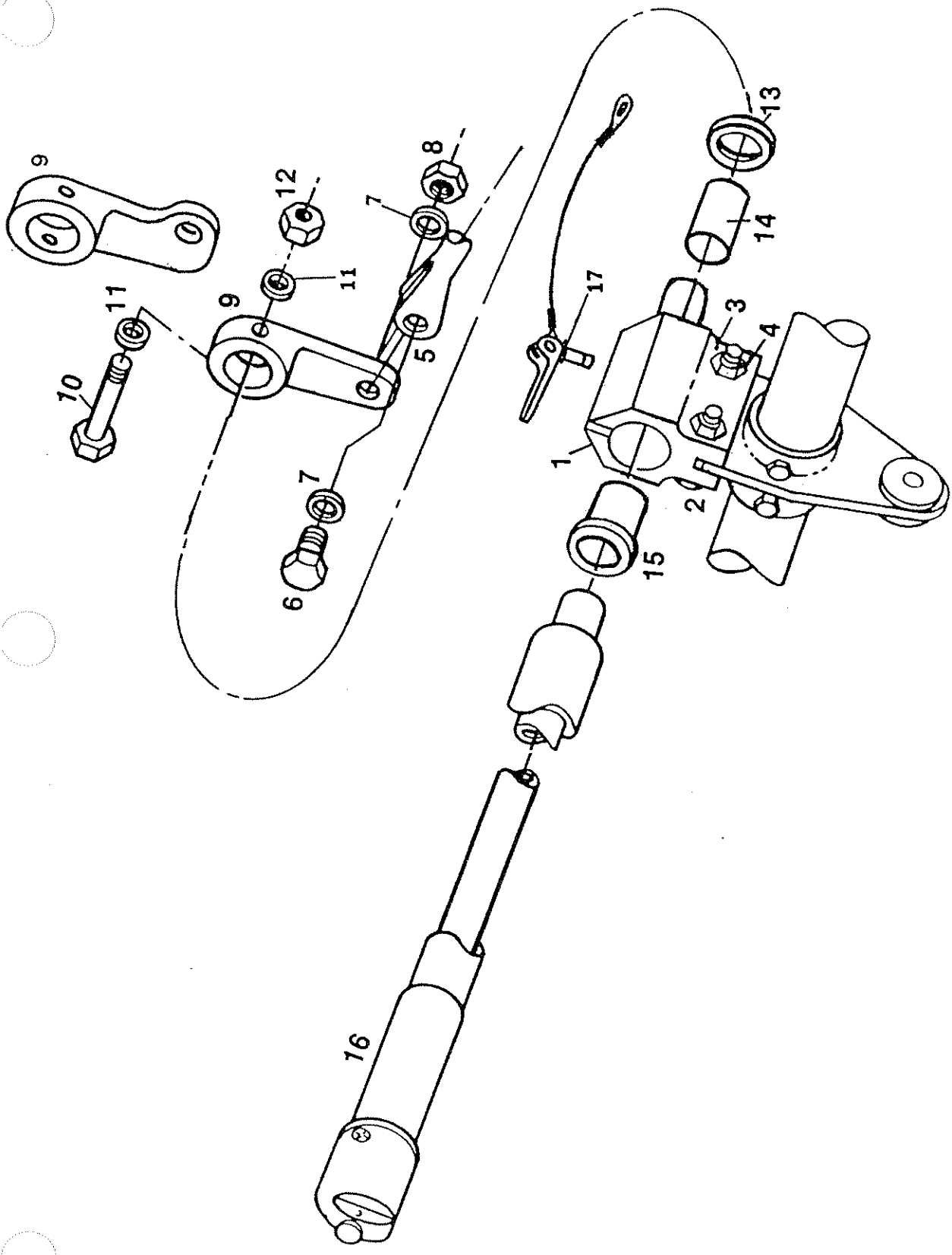

CO-PILOTS COLLECTIVE ASSEMBLY

FIGURE 8-12

UNCONTROLLED COPY WHEN DOWNLOADED OR PRINTED

Visit www.enstromhelicopter.com for instructions to order an original manual and to register for email notification updates.

UNCONTROLLED COPY WHEN DOWNLOADED OR PRINTED

Visit www.enstromhelicopter.com for instructions to order an original manual and to register for email notification updates.

Figure 8-12

ITEM NUMBER	PART NUMBER	DESCRIPTION	QTY. PER ASSY.	MODELS AFFECTED								
				F28A	280	F28C	280C	F28F	280F	280FX		
	28-16261	Co-Pilots Collective										
		Assembly	1	X	X							
1	28-16246	Clamp	1	X	X							
1a	28-16250	Clamp Assembly	1	X	X							
2	AN4-14A	Bolt	4	X	X							
3	AN960-416L	Washer	8	X	X							
4	AN364-428	Nut	4	X	X							
5	28-16401-1	Dual Throttle Tie Rod	1	X	X							
6	AN3-5A	Bolt	1	X	X							
7	AN960-10L	Washer	2	X	X							
8	AN364-1032	Nut	1	X	X							
9	28-16407	Bellcrank										
10	AN3-13A	Bolt	1	X	X							
11	AN960-10L	Washer	2	X	X							
12	AN364-1032	Nut	1	X	X							
13	DU-08	"DU" Bearing	1	X	X							
14	*10DU-10	"DU" Bearing	1	X	X							
15	28-16249	Sleeve	1	X	X							
16	28-16169-1	Cork Grip	1	X	X							
17	EGP3C6TL6	Expando Grip Pin	1	X	X							

UNCONTROLLED COPY WHEN DOWNLOADED OR PRINTED
Visit www.enstromhelicopter.com for instructions to order an original manual and to register for email notification updates.

UNCONTROLLED COPY WHEN DOWNLOADED OR PRINTED

Visit www.enstromhelicopter.com for instructions to order an original manual and to register for email notification updates.

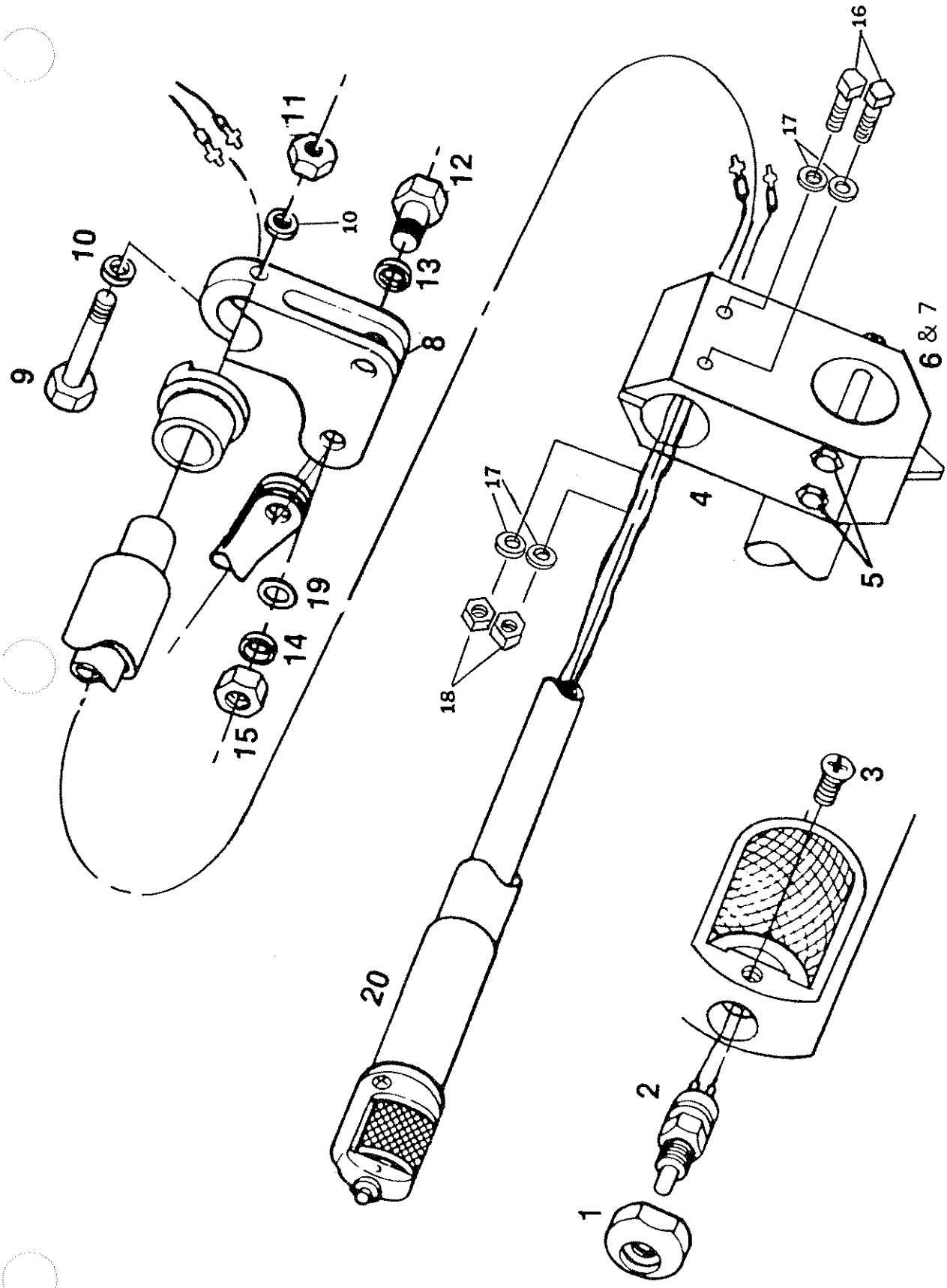

PILOTS COLLECTIVE ASSEMBLY

FIGURE 8-13

UNCONTROLLED COPY WHEN DOWNLOADED OR PRINTED

Visit www.enstromhelicopter.com for instructions to order an original manual and to register for email notification updates.

UNCONTROLLED COPY WHEN DOWNLOADED OR PRINTED

Visit www.enstromhelicopter.com for instructions to order an original manual and to register for email notification updates.

Figure 8-13

ITEM NUMBER	PART NUMBER	DESCRIPTION	QTY. PER ASSY.	MODELS AFFECTED								
				F28A	280	F28C	280C	F28F	280F	280FX		
	28-16200-906	Pilots Collective										
		Assembly	1	X	X							
1	28-16114	Switch Mount	1	X	X							
2	30-1	Switch	1	X	X							
3	AN509-8-R4	Screws	2	X	X							
4	28-16163	Clamp	1	X	X							
5	AN3-23A	Bolt	2	X	X							
6	AN960-10L	Washer	4	X	X							
7	AN364-1032	Nut	2	X	X							
8	28-16168	Bellcrank	1	X	X							
9	AN3-13A	Bolt	1	X	X							
10	AN960-10L	Washer	2	X	X							
11	AN364-1032	Nut	1	X	X							
12	AN3-10A	Bolt	1	X	X							
13	28-16403	Spacer	1	X	X							
14	28-16404	Spacer	1	X	X							
15	AN364-1032	Nut	1	X	X							
16	AN3-16A	Bolt	2	X	X							
17	AN960-10L	Washer	4	X	X							
18	AN364-1032	Nut	2	X	X							
19	AN960-10L	Washer	1	X	X							
20	28-16169-1	Cork Grip	1	X	X							

UNCONTROLLED COPY WHEN DOWNLOADED OR PRINTED
Visit www.enstrombelicopter.com for instructions to order an original manual and to register for email notification updates.

UNCONTROLLED COPY WHEN DOWNLOADED OR PRINTED

Visit www.enstromhelicopter.com for instructions to order an original manual and to register for email notification updates.

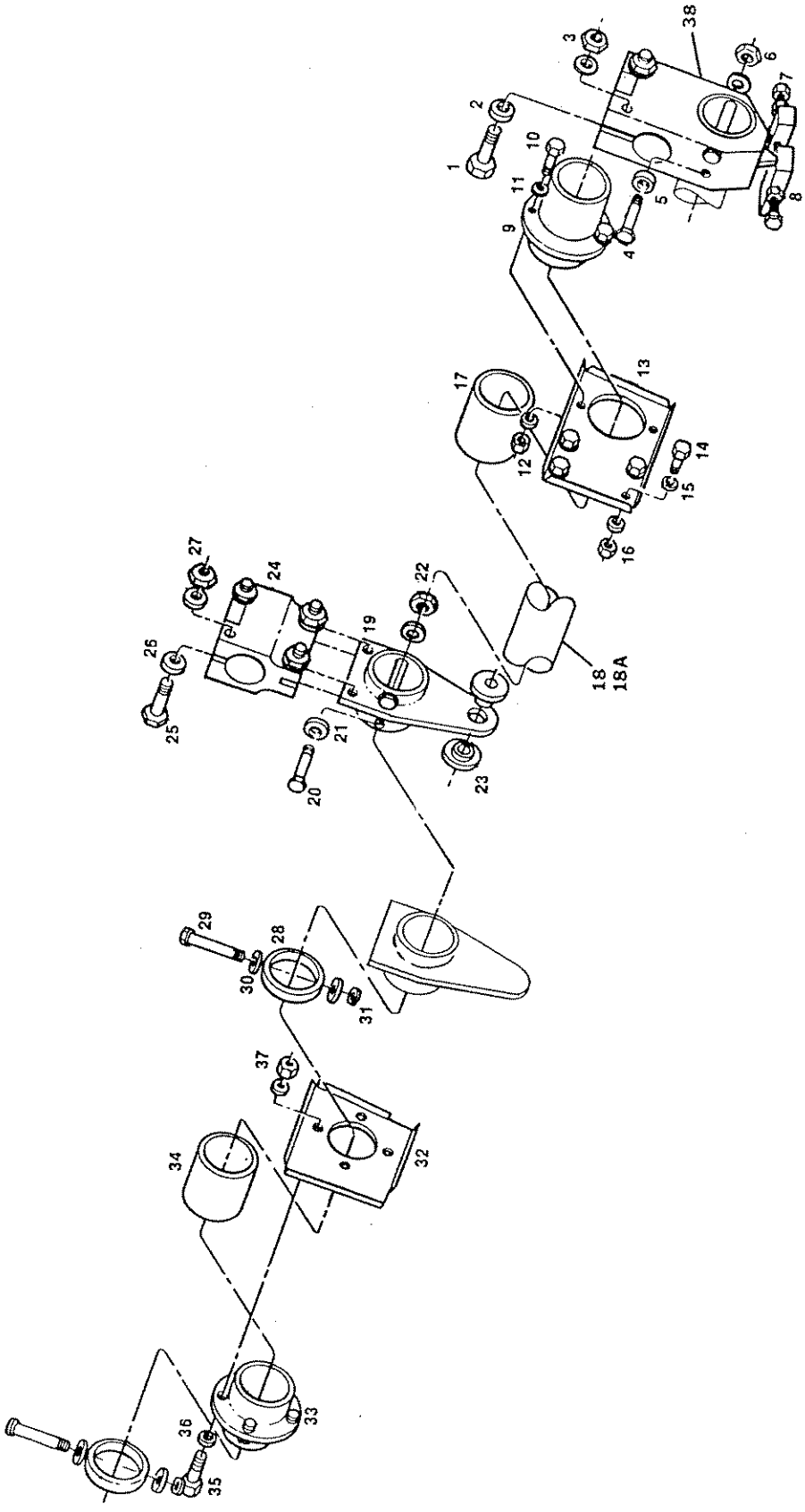

COLLECTIVE CONTROL SYSTEM TORQUE SHAFT ASSEMBLY
FIGURE 8-14

UNCONTROLLED COPY WHEN DOWNLOADED OR PRINTED

Visit www.enstromhelicopter.com for instructions to order an original manual and to register for email notification updates.

UNCONTROLLED COPY WHEN DOWNLOADED OR PRINTED

Visit www.enstromhelicopter.com for instructions to order an original manual and to register for email notification updates.

Figure 8-14

ITEM NUMBER	PART NUMBER	DESCRIPTION	QTY. PER ASSY.	MODELS AFFECTED								
				F28A	280	F28C	280C	F28F	280F	280FX		
		Collective Control										
		System Torque Shaft										
		Assembly										
1	AN3-16A	Bolt	2	X	X							
2	AN960-10L	Washer	4	X	X							
3	AN364-1032	Nut	2	X	X							
4	AN3-23A	Bolt	2	X	X							
5	AN960-10L	Washer	2	X	X							
6	AN364-1032	Nut	2	X	X							
7	28-16200-4	Bolt	1	X	X							
8	AN316-4R	Check Nut	2	X	X							
9	28-16162	Bearing Housing	1	X	X							
10	AN3-4A	Bolt	2	X	X							
11	AN960-10L	Washer	4	X	X							
12	AN364-1032	Nut	2	X	X							
13	28-16216-3	Bracket	1	X	X							
14	AN3-3A	Bolt	4	X	X							
15	AN960-10L	Washer	8	X	X							
16	AN364-1032	Nut	4	X	X							
17	28-DU-24	Bearing	1	X	X							
18	28-16204	Shaft	1	X								
18a	280-162000-11	Shaft	1		X							
19	28-16181	Bell Crank	1	X	X							
20	AN3-23A	Bolt	2	X	X							
21	AN960-10L	Washer	4	X	X							
22	AN364-1032	Nut	2	X	X							
23	28-16156	Bearing	2	X	X							
24	28-16182	Clamp	1	X	X							
25	AN4-14A	Bolt	4	X	X							
26	AN416	Washer	8	X	X							
27	AN364-428	Nut	4	X	X							
28	28-16214	Sleeve	2	X	X							
29	AN3-23A	Bolt	2	X	X							

UNCONTROLLED COPY WHEN DOWNLOADED OR PRINTED
Visit www.enstromhelicopter.com for instructions to order an original manual and to register for email notification updates.

Figure 8-14 (Cont.)

ITEM NUMBER	PART NUMBER	DESCRIPTION	QTY. PER ASSY.	MODELS AFFECTED								
				F28A	280	F28C	280C	F28F	280F	280FX		
30	AN960-10L	Washer	4	X	X							
31	AN364-1032	Nut	2	X	X							
32	28-11388	Stiffener	1	X	X							
33	28-16180	Bearing Housing	1	X	X							
34	28-DU-24	Bearing	1	X	X							
35	AN3-4A	Bolt	4	X	X							
36	AN960-10L	Washer	4	X	X							
37	AN365-1032	Nut	2	X	X							
38	28-16163	Clamp	1	X								

UNCONTROLLED COPY WHEN DOWNLOADED OR PRINTED

Visit www.enstromhelicopter.com for instructions to order an original manual and to register for email notification updates.

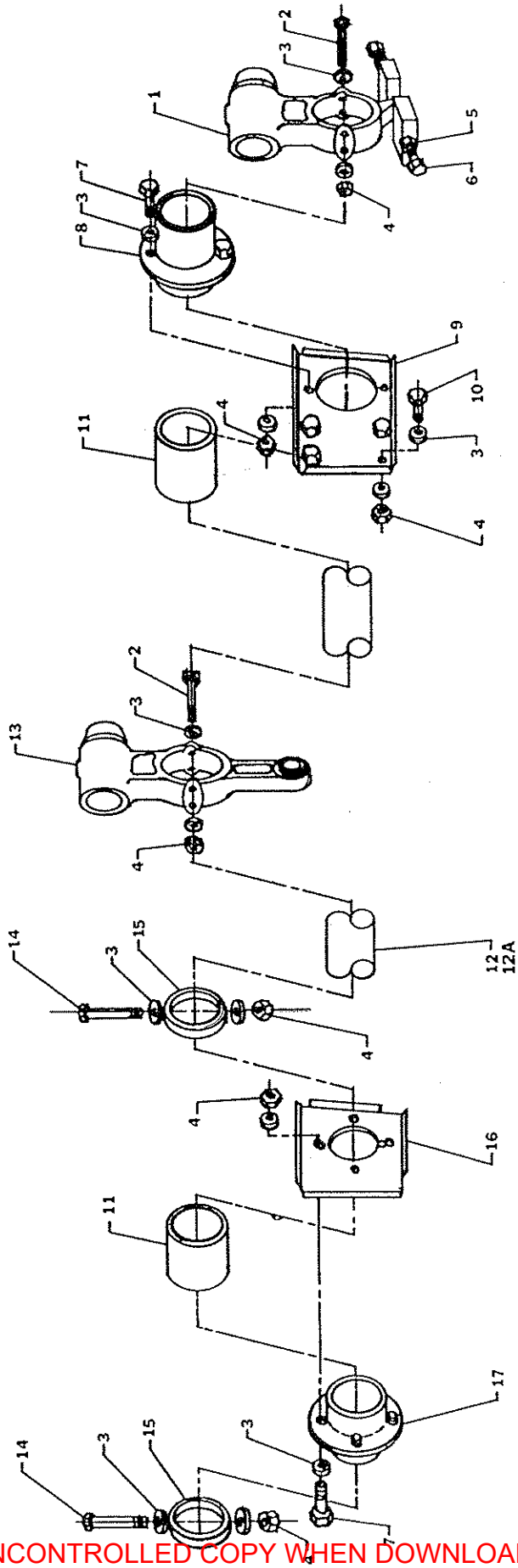

COLLECTIVE CONTROL SYSTEM TORQUE SHAFT ASSY.
FIGURE 8-15

UNCONTROLLED COPY WHEN DOWNLOADED OR PRINTED

Visit www.enstromhelicopter.com for instructions to order an original manual and to register for email notification updates.

UNCONTROLLED COPY WHEN DOWNLOADED OR PRINTED

Visit www.enstromhelicopter.com for instructions to order an original manual and to register for email notification updates.

Figure 8-15

ITEM NUMBER	PART NUMBER	DESCRIPTION	QTY. PER ASSY.	MODELS AFFECTED								
				F28A	280	F28C	280C	F28F	280F	280FX		
1	28-16186-1	Socket	1	X	X	X	X					
2	AN3-24A	Bolt	4	X	X	X	X					
3	AN960-10L	Washer	32	X	X	X	X					
4	AN364-1032A	Nut	16	X	X	X	X					
5	AN316-4R	Check Nut	2	X	X	X	X					
6	28-16200-4	Bolt	2	X	X	X	X					
7	AN3-4A	Bolt	6	X	X	X	X					
8	28-16162-1	Bearing Housing	1	X	X	X	X					
9	28-16216-3	Bracket	1	X	X	X	X					
10	AN3-3A	Bolt	4	X	X	X	X					
11	28-DU-24	Bearing	2	X	X	X	X					
12	28-16204-1	Shaft	1	X		X						
12a	280-162000-11	Shaft	1		X		X					
13	28-16029-1	Socket	1	X	X	X	X					
14	AN3-23A	Bolt	2	X	X	X	X					
15	28-16214-1	Sleeve	2	X	X	X	X					
16	28-11388-1	Stiffener	1	X	X	X	X					
17	28-16180-1	Bearing Housing	1	X	X	X	X					

UNCONTROLLED COPY WHEN DOWNLOADED OR PRINTED
Visit www.enstromhelicopter.com for instructions to order an original manual and to register for email notification updates.

UNCONTROLLED COPY WHEN DOWNLOADED OR PRINTED

Visit www.enstromhelicopter.com for instructions to order an original manual and to register for email notification updates.

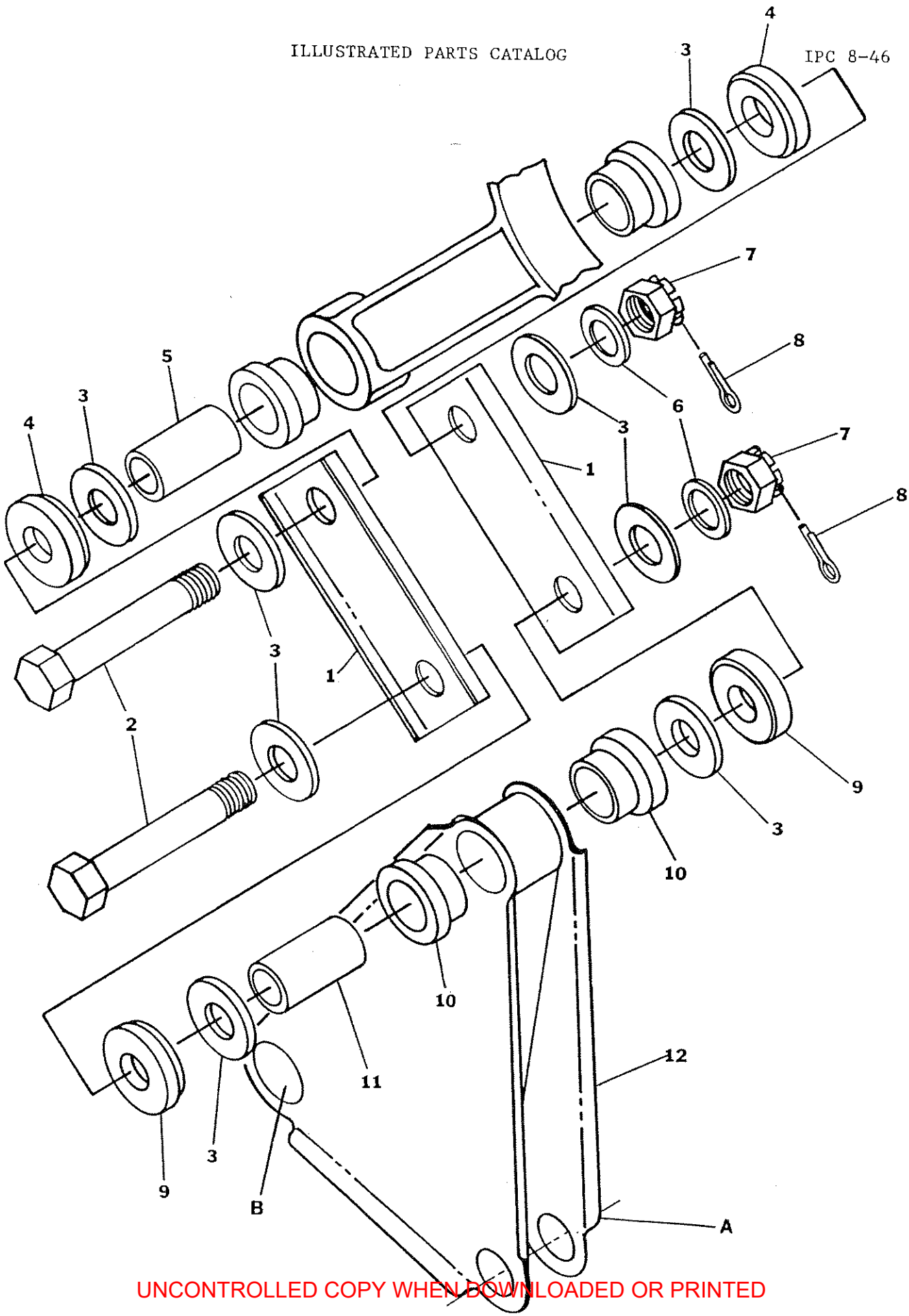

UNCONTROLLED COPY WHEN DOWNLOADED OR PRINTED
Visit www.enstromhelicopter.com for instructions to order an original manual and to register for email notification updates.

COLLECTIVE CONTROL REVERSING BELLCRANK
FIGURE 8-16

UNCONTROLLED COPY WHEN DOWNLOADED OR PRINTED

Visit www.enstromhelicopter.com for instructions to order an original manual and to register for email notification updates.

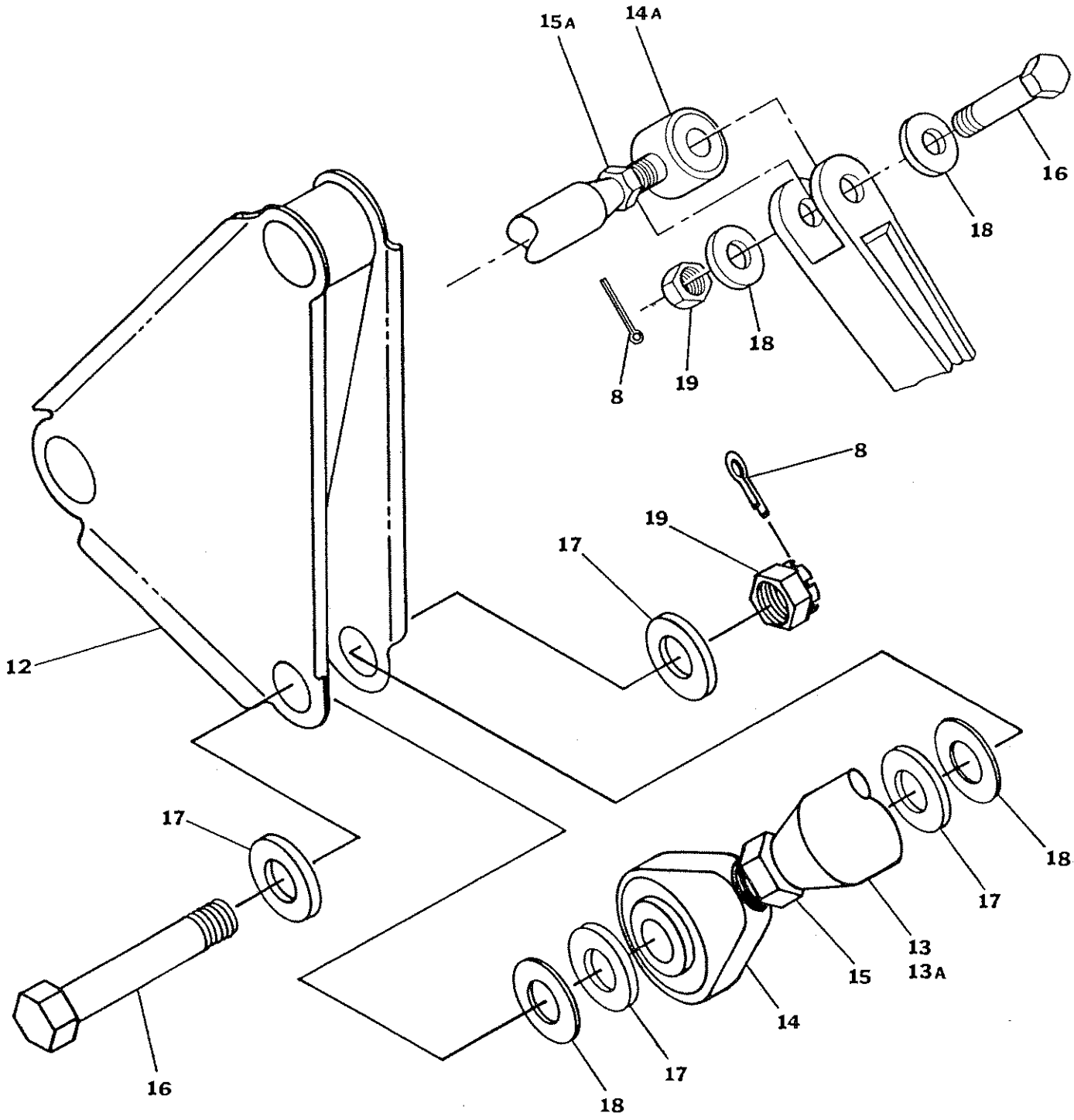

COLLECTIVE CONTROL PUSH-PULL ROD ATTACHMENT

FIGURE 8-16A

UNCONTROLLED COPY WHEN DOWNLOADED OR PRINTED

Visit www.enstromhelicopter.com for instructions to order an original manual and to register for email notification updates.

UNCONTROLLED COPY WHEN DOWNLOADED OR PRINTED

Visit www.enstromhelicopter.com for instructions to order an original manual and to register for email notification updates.

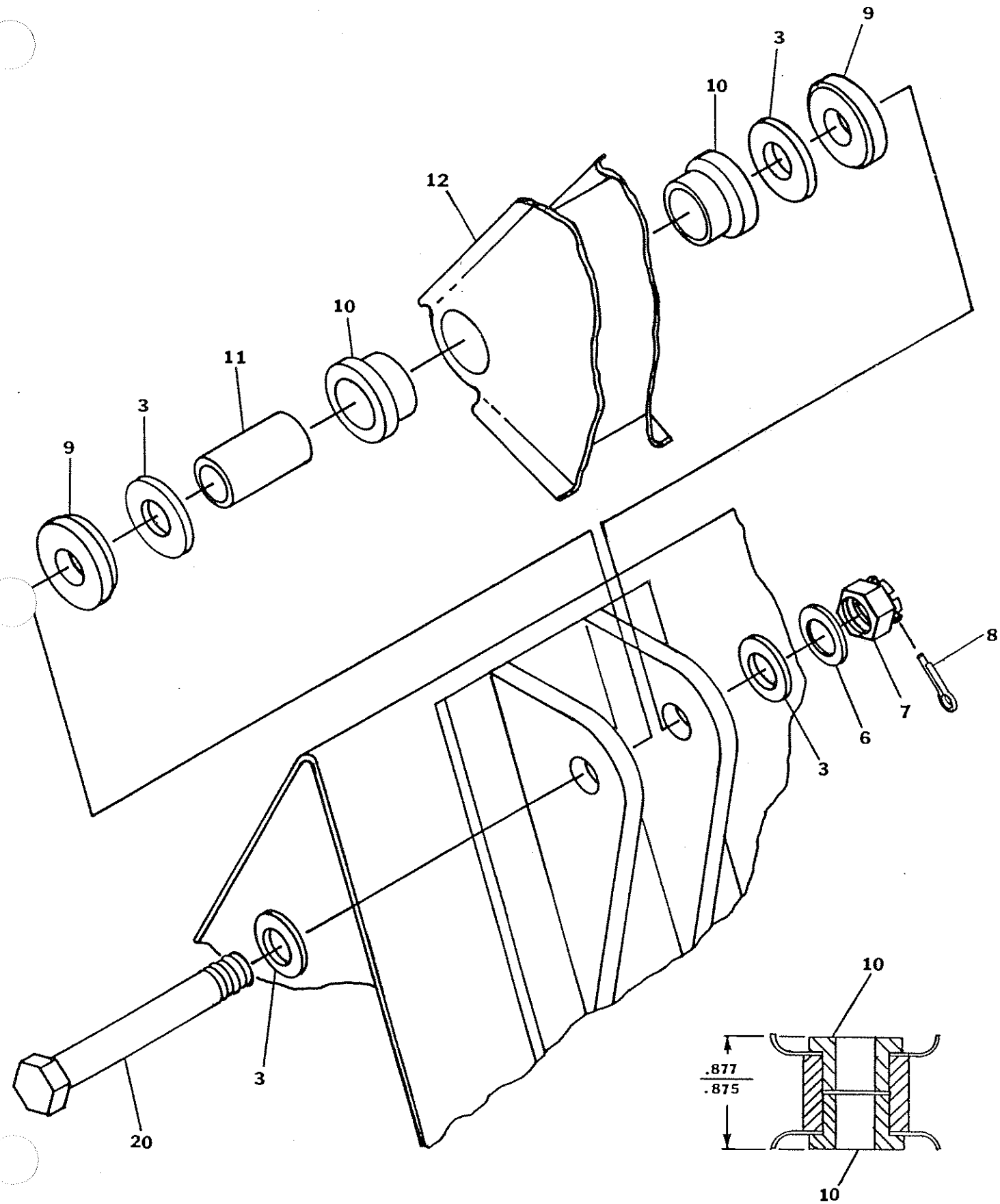

COLLECTIVE REVERSING BELLCRANK PIVOT

FIGURE 8-16B

UNCONTROLLED COPY WHEN DOWNLOADED OR PRINTED
Visit www.enstromhelicopter.com for instructions to order an original manual and to register for email notification updates.

UNCONTROLLED COPY WHEN DOWNLOADED OR PRINTED

Visit www.enstromhelicopter.com for instructions to order an original manual and to register for email notification updates.

Figure 8-16, 16A & 16B

ITEM NUMBER	PART NUMBER	DESCRIPTION	QTY. PER ASSY.	MODELS AFFECTED								
				F28A	280	F28C	280C	F28F	280F	280FX		
1	28-16208-1	Link	2	X	X	X	X	X	X	X		
2	AN4-17	Bolt	2	X	X	X	X	X	X	X		
3	1/4 Harper	Washer (.050 Thick)	10	X	X	X	X	X	X	X		
4	28-16211-1	Spacer	2	X	X	X	X	X	X	X		
5	28-16157-3	Spacer	1	X	X	X	X	X	X	X		
6	AN960-416	Washer	3	X	X	X	X	X	X	X		
7	F12-NE-4753-048	Nut	3	X	X	X	X	X	X	X		
8	AN381-2-8	Cotter Pin	4	X	X	X	X	X	X	X		
9	28-16210-4	Spacer	4	X	X	X	X	X	X	X		
*10	28-16156-1	Bearing	4	X	X	X	X	X	X	X		
11	28-16202-1	Spacer	2	X	X	X	X	X	X	X		
12	28-16189-1	Bell Crank	1	X	X	X	X	X	X	X		
13	28-16179-1	Push Rod	1	X	X							
13a	28-16179-2	Push Rod	1			X	X	X	X	X		
14	HMLVV-5	Rod End	1	X	X	X	X	X	X	X		
14a	HMVV5	Rod End	1	X	X	X	X	X	X	X		
15	AN316-5L	Nut	1	X	X	X	X	X	X	X		
15a	AN316-5	Check Nut	1	X	X	X	X	X	X	X		
16	AN5-11	Bolt	2	X	X	X	X	X	X	X		
17	AN960-516	Washer	4	X	X	X	X	X	X	X		
18	AN960-516L	Washer	4	X	X	X	X	X	X	X		
19	F12-NE-4753-054	Nut	2	X	X	X	X	X	X	X		
20	AN4-20	Bolt	1	X	X	X	X	X	X	X		

UNCONTROLLED COPY WHEN DOWNLOADED OR PRINTED

*If new 28-16156-1 Bearings are installed in 28-16189-1 Bell Crank Pivot, Machine Bearings per Sketch on Figure 8-16B

Visit www.enstromhelicopter.com for instructions to order an original manual and to register for email notification updates.

UNCONTROLLED COPY WHEN DOWNLOADED OR PRINTED

Visit www.enstromhelicopter.com for instructions to order an original manual and to register for email notification updates.

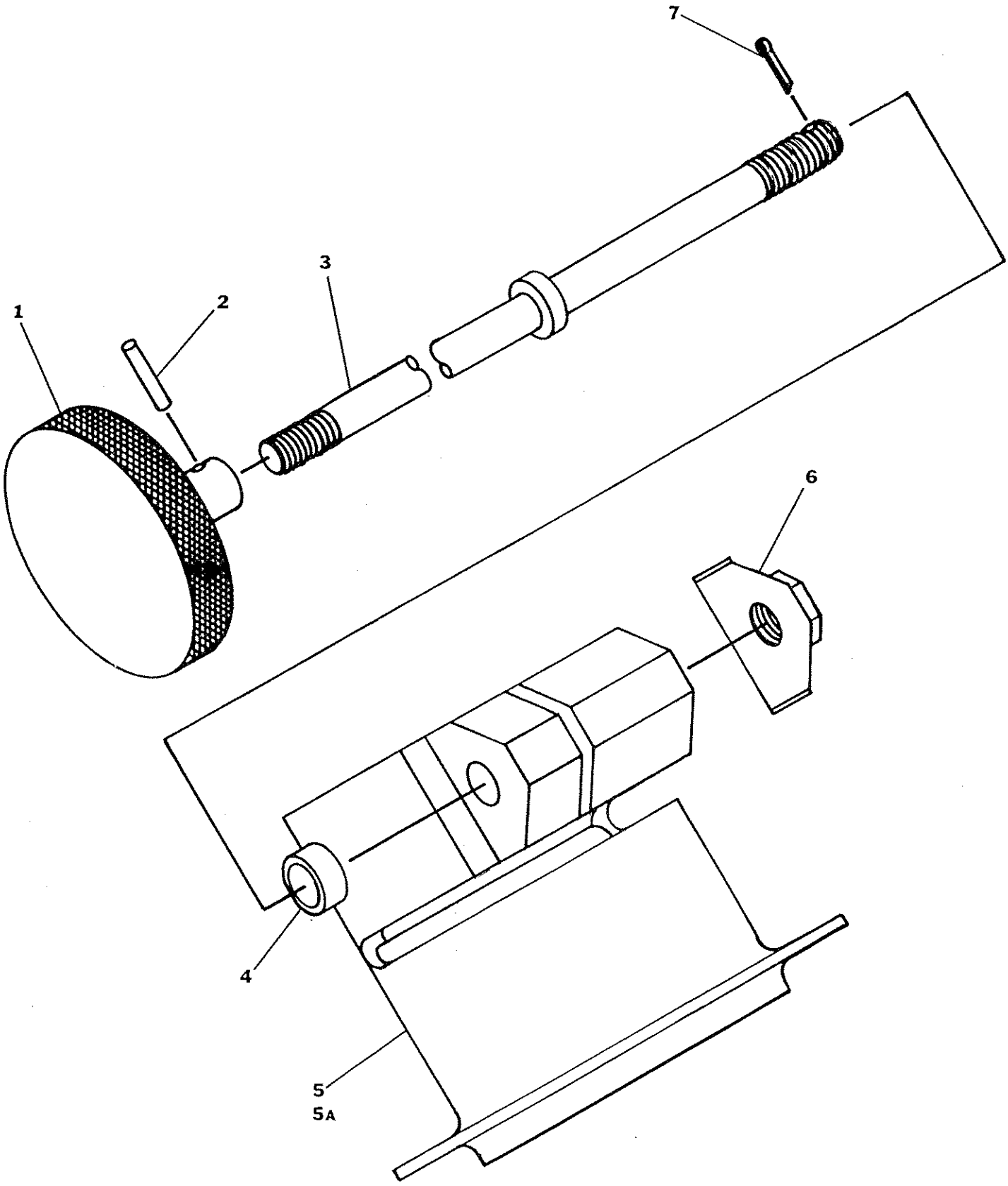

UNCONTROLLED COPY WHEN DOWNLOADED OR PRINTED

COLLECTIVE STICK FRICTION CONTROL
FIGURE 8-17

Visit www.enstromhelicopter.com for instructions to order an original manual and to register for email notification updates.

UNCONTROLLED COPY WHEN DOWNLOADED OR PRINTED

Visit www.enstromhelicopter.com for instructions to order an original manual and to register for email notification updates.

Figure 8-17

ITEM NUMBER	PART NUMBER	DESCRIPTION	QTY. PER ASSY.	MODELS AFFECTED								
				F28A	280	F28C	280C	F28F	280F	280FX		
1	28-16274-1	Knob	1	X	X	X	X	X	X	X		
2	MS16562-213	Roll Pin	1	X	X	X	X	X	X	X		
3	28-16277-1	Rod	1	X	X	X	X	X	X	X		
4	28-16276-1	Spacer	1	X	X	X	X	X	X	X		
5	28-16162-1	Bearing Housing	1	X	X							
*5a	28-16083-1	Bearing Housing	1			X	X	X	X	X		
6	28-16275-1	Nut Clip	1	X	X	X	X	X	X	X		
7	AN381-2-8	Cotter Pin	1	X	X	X	X	X	X	X		

UNCONTROLLED COPY WHEN DOWNLOADED OR PRINTED
Visit www.enstromhelicopter.com for instructions to order an original manual and to register for email notification updates.

*Standard Production Part

UNCONTROLLED COPY WHEN DOWNLOADED OR PRINTED

Visit www.enstromhelicopter.com for instructions to order an original manual and to register for email notification updates.

ENSTROM F-28/280 SERIES ILLUSTRATED PARTS CATALOG

SECTION 9

FURNISHINGS

TABLE OF CONTENTS

	Cover Page	9-1
	Table of Contents	9-1
9-1	Cabin Seat Assembly	9-2
9-2	Cabin Furnishings (Non-Production Models)	9-5
9-3	Cabin Furnishings and Fire Extinguisher	9-8
9-4	280F/FX Cabin Furnishings	9-13
9-5	Cabin Furnishings – Passenger Restraint System	9-18

UNCONTROLLED COPY WHEN DOWNLOADED OR PRINTED

Visit www.enstromhelicopter.com for instructions to order an original manual and to register for email notification updates.

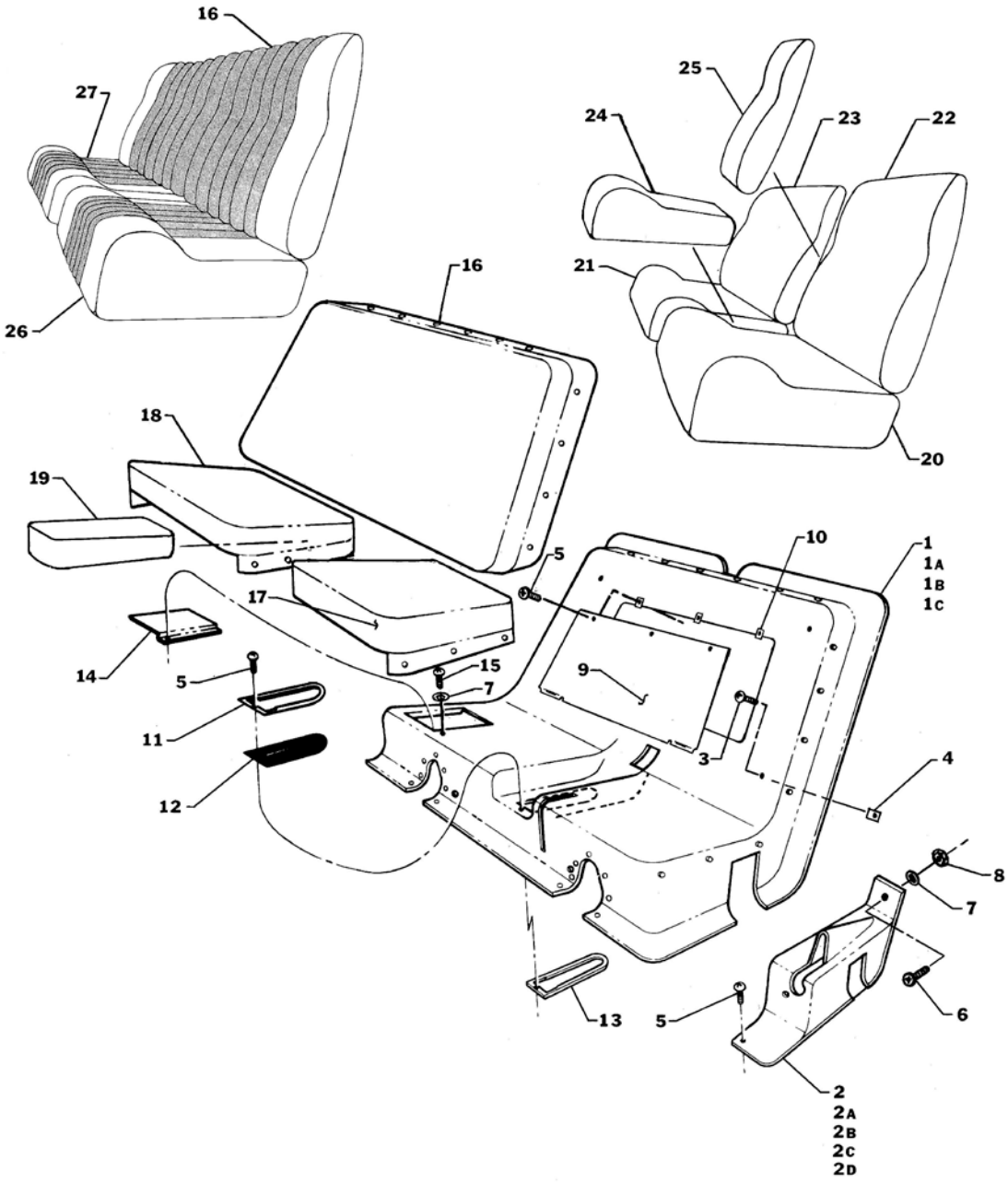

FIGURE 9-1. CABIN SEAT ASSEMBLY

UNCONTROLLED COPY WHEN DOWNLOADED OR PRINTED
Visit www.enstromhelicopter.com for instructions to order an original manual and to register for email notification updates.

FIGURE 9-1. CABIN SEAT ASSEMBLY

ITEM NUMBER	PART NUMBER	DESCRIPTION	QTY PER ASSY	MODELS AFFECTED						
				F-28A	280	F-28C	280C	F-28F	280F	280FX
1	28-11303-1	Seat Structure Cover	1	X		X				
1A	28-11303-5	Seat Structure Cover	1					X		
1B	280-113033-1	Seat Structure Cover	1		X		X			
1C	280-113033-3	Seat Structure Cover	1						X	X
2	28-113040-11	Collective Shroud	1	X		X				
2A	28-113040-13	Collective Shroud	1		X		X			
2BΔ	28-16070-103	Collective Shroud Assembly (See Figure 9-4)	REF							X
2B	28-16070-101	Collective Shroud Assembly (S/S by 28-16070-103, See Figure 9-4)	REF							X
2B*	28-16070-7	Collective Shroud Assembly (S/S by 28-16070-101, See Figure 9-4)	1				X		X	X
2C	28-16070-9	Collective Shroud Assembly (See Figure 9-3)	1					X		
2C**	28-16070-5	Collective Shroud Assembly (S/S by 28-16070-9, See Figure 9-3)	1			X		X		
2D***	28-16099-1	Collective Shroud	1					X		
3	AN530-8R8	Screw	5	X	X	X	X	X	X	X
4	A1787-8Z-1	Nut - Tinnerman	5	X	X	X	X	X	X	X
5	6x1/2	Screw Truss Head	AR	X	X	X	X	X	X	X
6	AN526-832R8	Screw	AR	X	X	X	X	X	X	X
7	AN960-8L	Washer	AR	X	X	X	X	X	X	X
8	AN340-8	Nut	1	X	X	X	X			
9	28-113042-11	Access Door	1	X	X	X	X	X	X	X
10	A1784-6Z-1	Nut - Tinnerman	3	X	X	X	X	X	X	X
11	28-11430-1	Plate - Seat	1	X	X	X	X	X	X	X
12	28-11303-4	Boot - Neoprene	1	X	X	X	X	X	X	X
13	28-11431-1	Doubler	1	X	X	X	X	X	X	X
14	28-113069-1	Access Plate	1	X	X	X	X	X	X	X
15	8x1/2	Screw - Truss Head	2	X	X	X	X	X	X	X
16●	28-11600-5	Back Cushion	1	X	X	X	X	X	X	
17●	28-11600-3	Pilot Seat Cushion	1	X	X	X	X	X	X	

UNCONTROLLED COPY WHEN DOWNLOADED OR PRINTED

Visit www.enstromhelicopter.com for instructions to order an original manual and to register for email notification updates.

FIGURE 9-1. CABIN SEAT ASSEMBLY

ITEM NUMBER	PART NUMBER	DESCRIPTION	QTY PER ASSY	MODELS AFFECTED						
				F-28A	280	F-28C	280C	F-28F	280F	280FX
18●	28-11600-4	Co-Pilot Seat Cushion	1	X	X	X	X	X	X	
19●	28-11600-8	Center Cushion	1	X	X	X	X	X	X	
20	28-116004-3	Pilot Seat Cushion	1					X		X
21	28-116005-1	Copilot Seat Cushion	1					X		X
22	28-116006-1	Pilot Back Cushion	1					X		X
23	28-116007-1	Co-Pilot Back Cushion	1					X		X
24	28-116008-1	Center Seat Cushion	1					X		X
25	28-116009-1	Center Back Cushion	1					X		X
26	28-11600-20	Pilot Seat Cushion	1	X	X	X	X	X	X	
27	28-11600-21	Co-Pilot Seat Cushion	1	X	X	X	X	X	X	

* With Correlator installation.

** Later F Models.

*** Early F-28F Models.

● Obsolete

Δ S/N 2167 and subsequent.

UNCONTROLLED COPY WHEN DOWNLOADED OR PRINTED

Visit www.enstromhelicopter.com for instructions to order an original manual and to register for email notification updates.

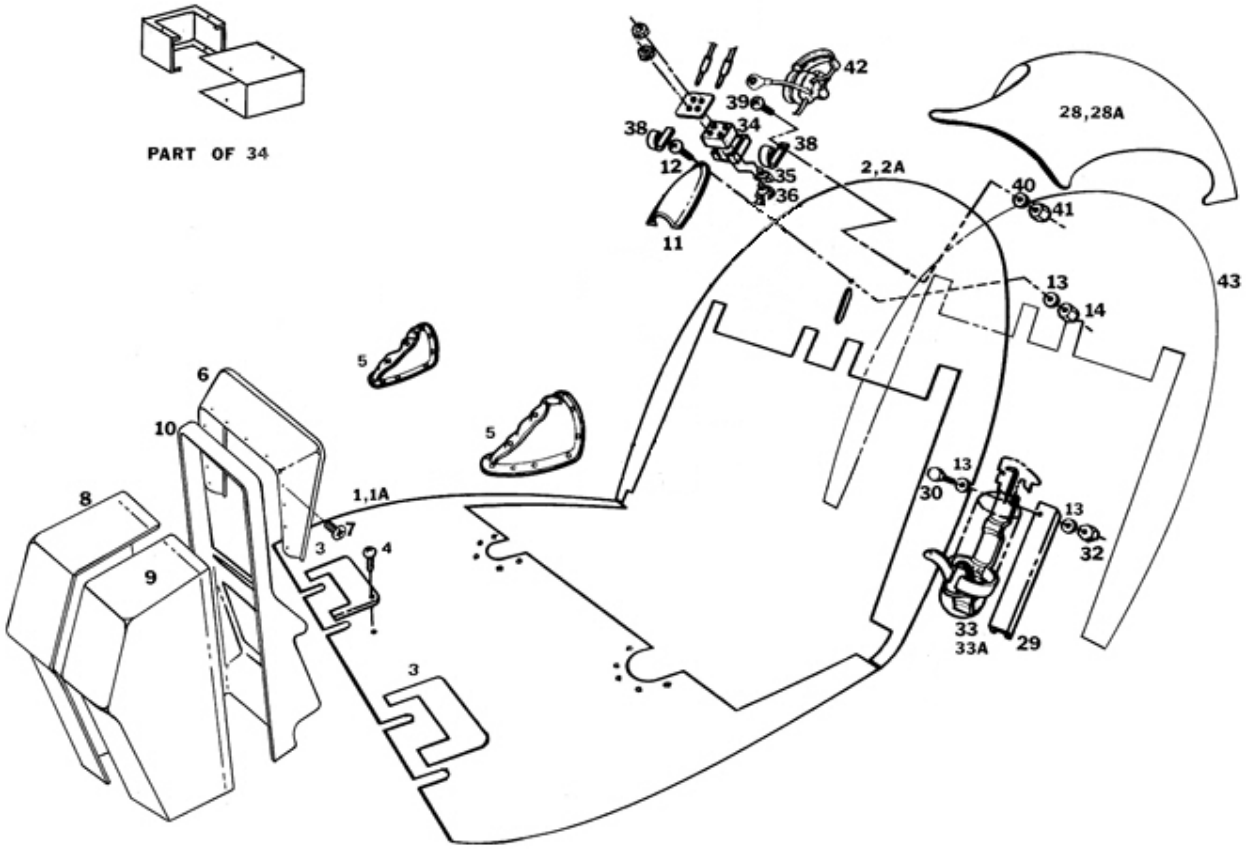

F-28A/C: All S/N

280/C: All S/N

NOTE: Refer to Figure 9-5 for restraint system parts.

FIGURE 9-2. CABIN FURNISHINGS (NON-PRODUCTION MODELS)

UNCONTROLLED COPY WHEN DOWNLOADED OR PRINTED

Visit www.enstromhelicopter.com for instructions to order an original manual and to register for email notification updates.

FIGURE 9-2. CABIN FURNISHINGS (NON-PRODUCTION MODELS)

ITEM NUMBER	PART NUMBER	DESCRIPTION	QTY PER ASSY	MODELS AFFECTED						
				F-28A	280	F-28C	280C	F-28F	280F	280FX
1	28-11600-13	. Carpet	1		X		X			
1A	28-11600-7	. Carpet	1	X		X				
2	28-11600-17	. Back Padding	1		X		X			
2A	28-11600-6	. Back Padding	1	X		X				
3	28-11603-1	. Scuff Plate	2	X	X	X	X			
4	6x1/2	. . Screw Truss Head	12	X	X	X	X			
5	28-11395-1	. Cyclic Boots	2	X	X	X	X			
6	280-180006-1	. Console Hood Assembly	1		X	X	X			
7	8x3/4	. . Screw Truss Head	20	X	X	X	X			
8	280-180001-12	. Console Side Cover RH	1	X	X	X	X			
9	280-180001-11	. Console Side Cover LH	1	X	X	X	X			
10	280-180001-13	. Console Front Cover	1	X	X	X	X			
11	28-11404-1	. Collective Housing	1	X	X	X	X			
12	AN526-832R8	. . Screw	3	X	X	X	X			
13	AN960-8L	. . Washer	11	X	X	X	X			
14	AN340-8	. . Nut	3	X	X	X	X			
28	28-11600-19	. Headliner	1		X		X			
28A	28-11600-9	. Headliner	1	X		X				
29	28-22101-1	. Backing Plate	1	X	X	X	X			
30*	AN525-832R10	. . Screw	4	X	X	X	X			
32*	AN364-832A	. . Nut	4	X	X	X	X			
33	SY-0211	. Fire Extinguisher	1	X	X	X	X			
33A**	C352TS	. Fire Extinguisher	1	X	X	X	X			
33A*	GH2 1/2	. Fire Extinguisher (Superseded by C352TS)	1	X	X	X	X			

UNCONTROLLED COPY WHEN DOWNLOADED OR PRINTED

Visit www.enstromhelicopter.com for instructions to order an original manual and to register for email notification updates.

FIGURE 9-2. CABIN FURNISHINGS (NON-PRODUCTION MODELS)

ITEM NUMBER	PART NUMBER	DESCRIPTION	QTY PER ASSY	MODELS AFFECTED						
				F-28A	280	F-28C	280C	F-28F	280F	280FX
34	28-22199-1	. Jack Box Assembly	1	X	X	X	X			
35	12B	. 1/4" Jack	2	X	X	X	X			
36	S-12B	. 3/16" Jack	2	X	X	X	X			
37	28-22117-3	. Jack Box Retainer	1	X	X	X	X			
38	28-22102-1	. Headset Hook	2	X	X	X	X			
39	AN526-632R10	. . Screw	4	X	X	X	X			
40	AN960-6L	. . Washer	4	X	X	X	X			
41	AN364-632A	. . Nut	4	X	X	X	X			
42	MRB-2400	. Headset	AR	X	X	X	X			
43	28-11504-1	. Soundproofing Instl.	AR	X	X	X	X			

* Preferred fire extinguisher double mounting hardware

** Effectivity F-28F S/N 831 and 280FX S/N 2146.

UNCONTROLLED COPY WHEN DOWNLOADED OR PRINTED

Visit www.enstromhelicopter.com for instructions to order an original manual and to register for email notification updates.

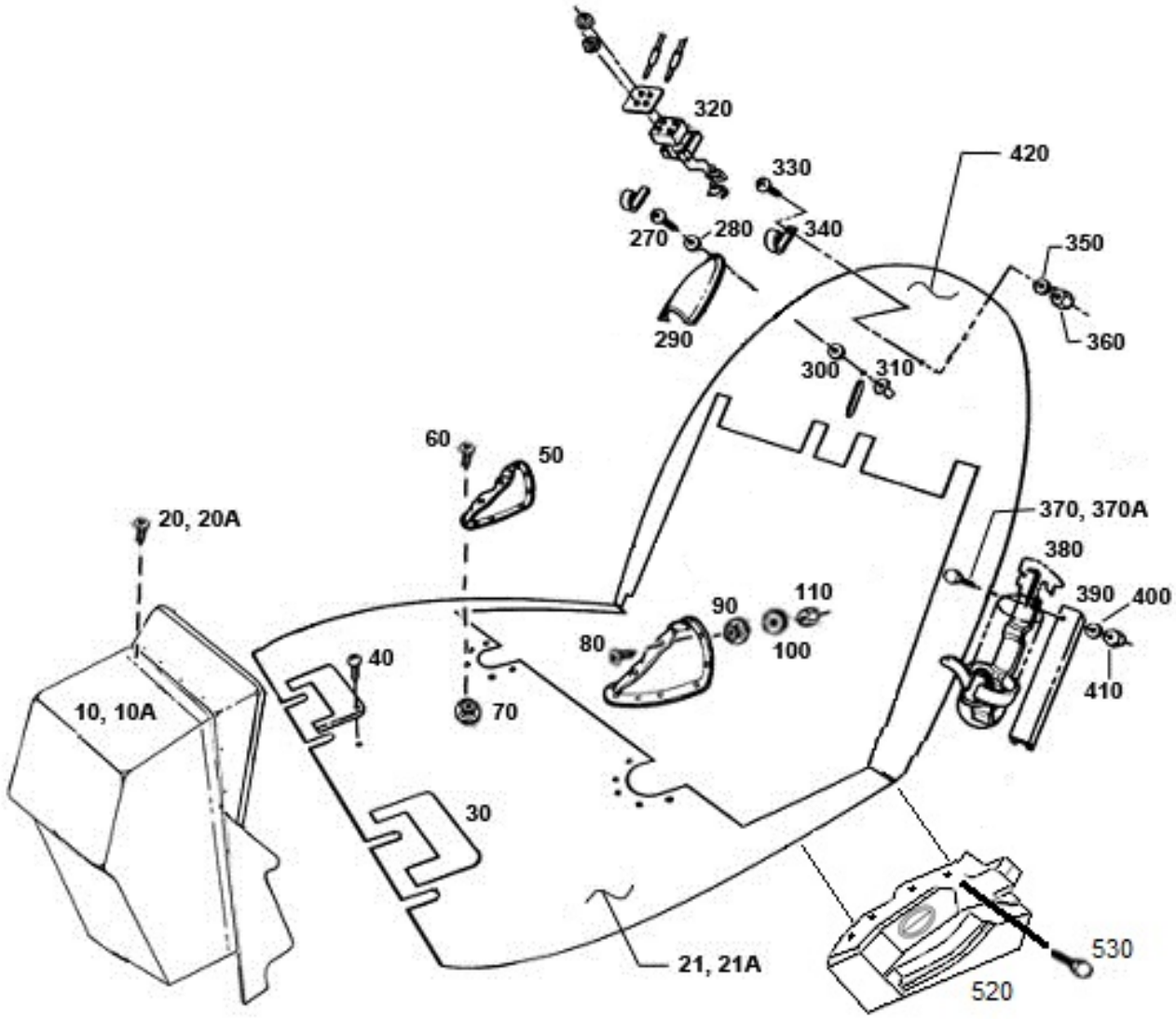

F-28A/C/F/280/C/F/FX (where noted): All S/N
NOTE: Refer to Figure 9-5 for restraint system parts.

Sheet 1 of 2

FIGURE 9-3. CABIN FURNISHINGS AND FIRE EXTINGUISHER

UNCONTROLLED COPY WHEN DOWNLOADED OR PRINTED
Visit www.enstromhelicopter.com for instructions to order an original manual and to register for email notification updates.

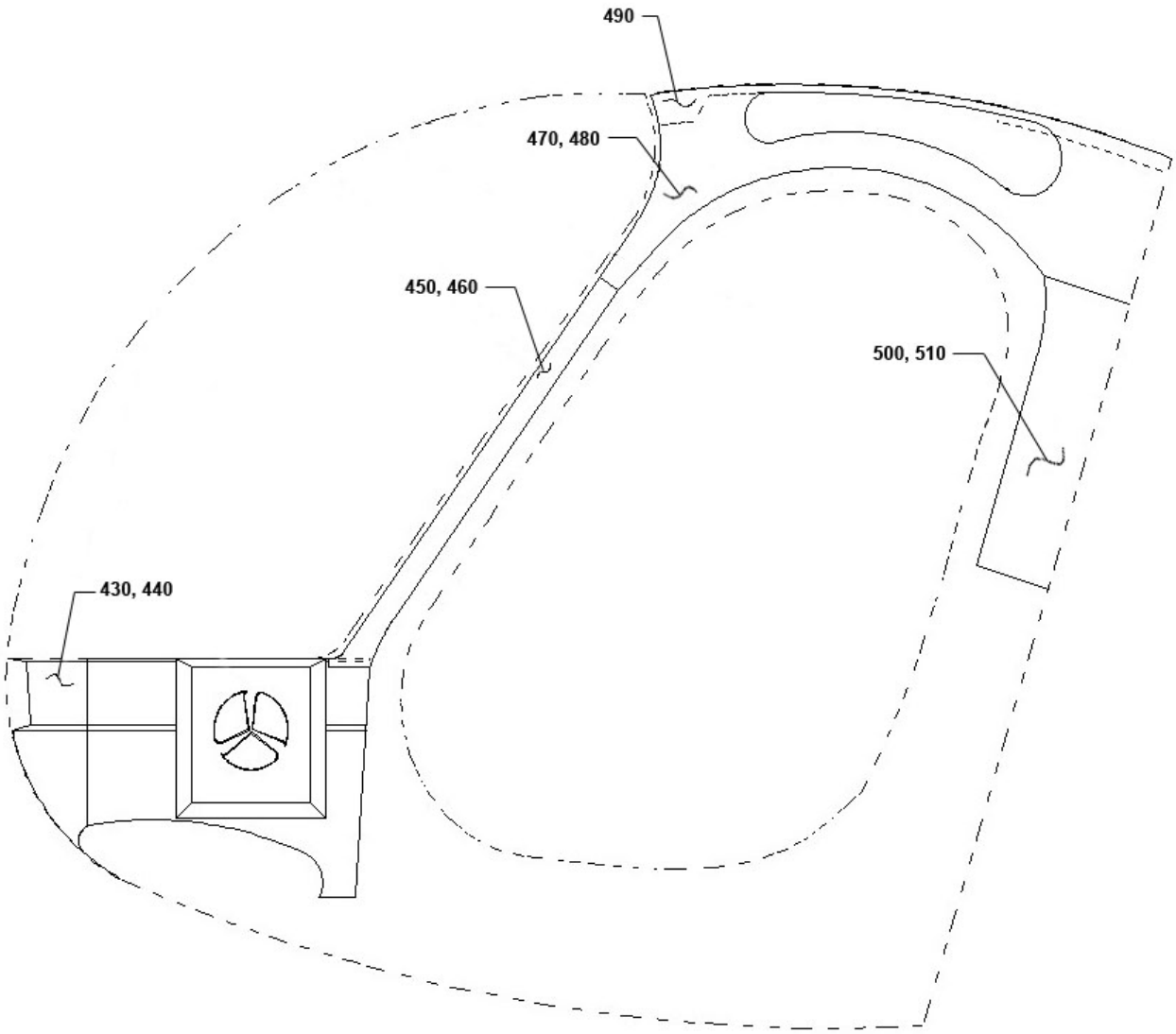

F-28A/C/F/280/C/F/FX (where noted): All S/N

Sheet 2 of 2

FIGURE 9-3. CABIN FURNISHINGS AND FIRE EXTINGUISHER

UNCONTROLLED COPY WHEN DOWNLOADED OR PRINTED

Visit www.enstromhelicopter.com for instructions to order an original manual and to register for email notification updates.

FIGURE 9-3. CABIN FURNISHINGS AND FIRE EXTINGUISHER

ITEM NUMBER	PART NUMBER	DESCRIPTION	QTY PER ASSY	MODELS AFFECTED						
				F-28A	280	F-28C	280C	F-28F	280F	280FX
–	28-11626	Interior and Trim Instal. F-28F	REF					X		
10	28-18166-1	. Hood Console Assy. (Wide)	1					X		
–	28-18158-1	. . Hood Assy. (Wide)	1					X		
–	28-18159-11	. . Instrument Face Panel (Wide)	1					X		
–	28-18161-11	. . Radio/Switch Panel (Wide)	1					X		
– ΔΔ	28-18162-17	. . Side Panel (L.H.)	1					X		
–	28-18162-15	. . Side Panel (L.H.) (Alternate, 3.50 in. wide cutout)	1					X		
–	28-18162-13	. . Side Panel (L.H.) (Alternate, 2.50 in. wide cutout)	1					X		
–	28-18162-14	. . Side Panel (R.H.)	1					X		
–	28-18164-5	. . Glare Shield Assy. (Wide)	1					X		
20	8x3/8	. . PK Screw	21					X		
–	AN6195-8Z-1D	. . Tinnerman Nut	7					X		
–	MS20426A3-4	. . Rivet	14					X		
10A	28-1866-5	.								
10A	28-18166-3	. Hood Console Assy. (Narrow)	1					X		
–	28-18158-3	. . Hood Assy. (Narrow)	1					X		
–	28-18159-13	. . Instrument Face Panel (Narrow)	1					X		
–	28-18161-15	. . Radio/Switch Panel (Narrow)	1					X		
–	28-18162-13	. . Side Panel (L.H.)	1					X		
–	28-18162-14-	. . Side Panel (R.H.)	1					X		
–	28-18164-3	. . Glare Shield Assy. (Narrow)	1					X		
20A	8x3/8	. . PK Screw	21					X		
–	AN6195-8Z-1D	. . Tinnerman Nut	7					X		
–	MS20426A3-4	. . Rivet	14					X		
21	28-11622-13	. Carpet Floor	1					X		
21A	28-11622-17	. Vinyl Floor (Alternate)	1					X		
30*	28-11608-13	. Scuff Plate	2					X		

UNCONTROLLED COPY WHEN DOWNLOADED OR PRINTED

Visit www.enstromhelicopter.com for instructions to order an original manual and to register for email notification updates.

FIGURE 9-3. CABIN FURNISHINGS AND FIRE EXTINGUISHER

ITEM NUMBER	PART NUMBER	DESCRIPTION	QTY PER ASSY	MODELS AFFECTED						
				F-28A	280	F-28C	280C	F-28F	280F	280FX
30	28-11608-11	. Scuff Plate (Superseded by 28-11608-13)	2					X		
40	AN530-6-8	. Screw	10					X		
50	28-11395-1	. Cyclic Boot	2					X		
60	AN531-6R8	. Screw	10					X		
70	550	. Stud	10					X		
80	MS24693S26	. Screw	10					X		
90	550	. Stud	10					X		
100	AN960-6L	. Washer	10					X		
110	AN365-632A	. Nut	10					X		
270	AN526-832R8	. Screw	3					X		
280	AN960-8L	. Washer	3					X		
290	28-11404-13	. Collective Push Pull Rod Cover	1					X		
300	AN936A8	. Lock Washer	3					X		
310	S8P270	. Plus Nut	3					X		
320**	28-22117	. Audio Jack Box Assy.	1					X		X
330	AN526-8R8	. . Screw	3					X		X
340	4115001-19	. . Headset Hook	3					X		X
350	AN960-8L	. . Washer	3					X		X
360	AN364-832	. . Nut	3					X		X
–	280-221001	. Fire Extinguisher Installation	REF	X	X	X	X	X	X	X
370	AN525-832R10	. . Screw	4	X	X	X	X	X	X	X
370A●	AN525-832R14	. . Screw	4	X	X	X	X	X	X	X
380	C352TS	. . Extinguisher	1	X	X	X	X	X	X	X
390	28-22101	. . Backing Plate	1	X	X	X	X	X	X	X
400	AN960-8L	. . Washer	4	X	X	X	X	X	X	X
410	AN364-832A	. . Nut	4	X	X	X	X	X	X	X

UNCONTROLLED COPY WHEN DOWNLOADED OR PRINTED

Visit www.enstromhelicopter.com for instructions to order an original manual and to register for email notification updates.

FIGURE 9-3. CABIN FURNISHINGS AND FIRE EXTINGUISHER

ITEM NUMBER	PART NUMBER	DESCRIPTION	QTY PER ASSY	MODELS AFFECTED						
				F-28A	280	F-28C	280C	F-28F	280F	280FX
420	28-11625-13	. Backwall Upholstery	1					X		
–●●	28-11610-5	. Interior Panel Installation	1					X		
–	28-11610-3	. Interior Panel Installation	1					X		
430	28-11611-2	. . Panel (R.H.)	1					X		
440	28-11611-1	. . Panel (L.H.)	1					X		
–	28-11612-11	. . Center Panel	1					X		
450	28-11613-12	. . Strip (R.H.)	1					X		
460	28-11613-11	. . Strip (L.H.)	1					X		
470	28-11614-12	. . Overhead Panel (R.H.)	1					X		
480	28-11614-11	. . Overhead Panel (L.H.)	1					X		
490●●	28-11615-15	. . Center Overhead Panel	1					X		
490	28-11615-13	. . Center Overhead Panel	1					X		
500	28-11618-12	. . Side Strip (R.H.)	1					X		
510	28-11618-11	. . Side Strip (L.H.)	1					X		
–	28-16069-5	. Collective Shroud Installation	1					X		
520	28-16070-5	. Collective Shroud Assembly (S/S by 28-16070-9)	1					X		
520Δ	28-16070-9	. Collective Shroud Assembly	1					X		
530	AN530-8R8	. . Screw	4					X		
–	8x1/2	. . Screw	1					X		

* Effectivity F-28F S/N 819 and subsequent. Retrofittable to S/N 509 and subsequent.

** The dash number for this item is ship specific. Contact Enstrom customer service for replacement parts.

● Use AN525-832R14 if vibration damping material is used on cabin wall.

●● S/N 832 and subsequent

Δ S/N 833 and subsequent. Retrofittable to S/N 509 and subsequent.

ΔΔ S/N 833 and subsequent. (Use alternate 28-18162-13 or 28-18162-15 if a fuse panel is installed.)

UNCONTROLLED COPY WHEN DOWNLOADED OR PRINTED

Visit www.enstromhelicopter.com for instructions to order an original manual and to register for email notification updates.

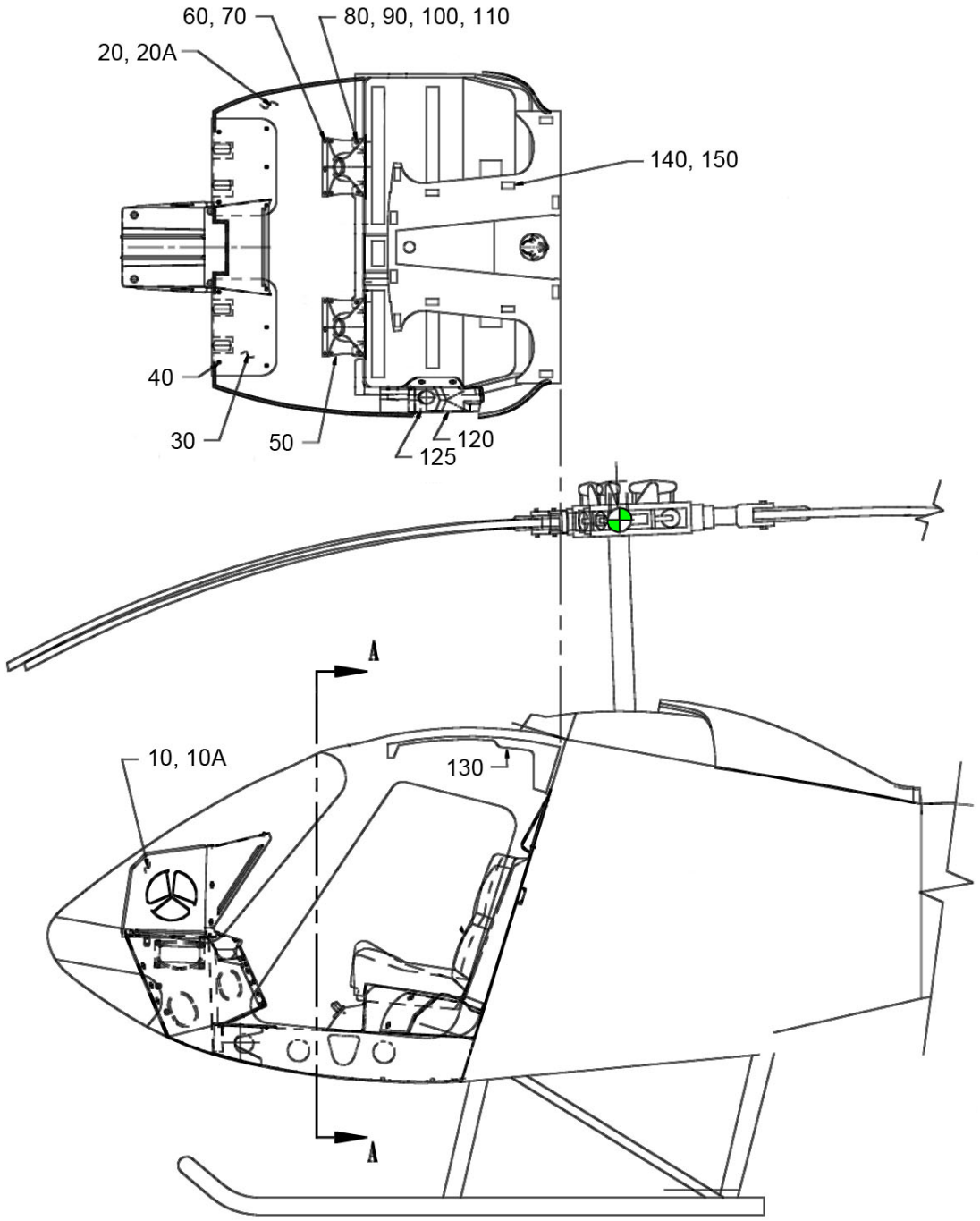

280F/FX: All S/N

Sheet 1 of 2

FIGURE 9-4. 280F/FX CABIN FURNISHINGS

UNCONTROLLED COPY WHEN DOWNLOADED OR PRINTED

Visit www.enstromhelicopter.com for instructions to order an original manual and to register for email notification updates.

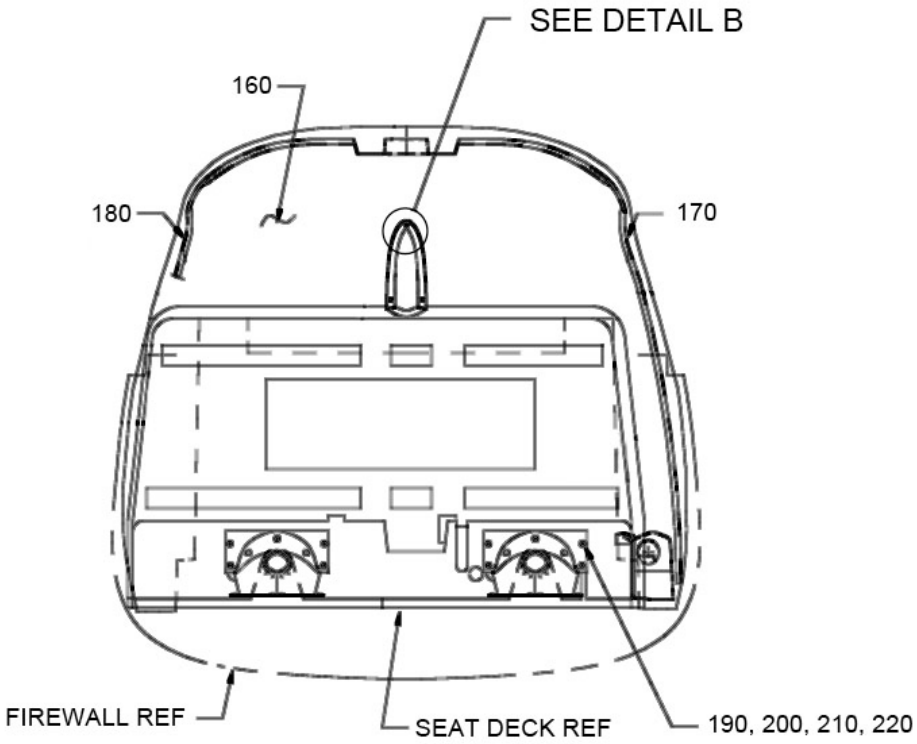

VIEW A

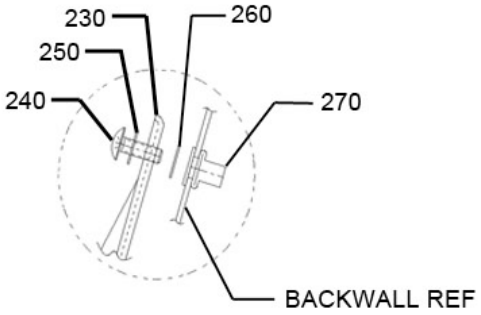

DETAIL B

280F/FX: All S/N

Sheet 2 of 2

FIGURE 9-4. 280F/FX CABIN FURNISHINGS

UNCONTROLLED COPY WHEN DOWNLOADED OR PRINTED

Visit www.enstromhelicopter.com for instructions to order an original manual and to register for email notification updates.

FIGURE 9-4. 280F/FX CABIN FURNISHINGS

ITEM NUMBER	PART NUMBER	DESCRIPTION	QTY PER ASSY	MODELS AFFECTED						
				F-28A	280	F-28C	280C	F-28F	280F	280FX
–	28-11624	Interior and Trim Instl. 280FX	Ref						X	X
10▲	28-18166-7	. Hood Console Assy. (Wide)	1							X
10	28-18166-1	. Hood Console Assy. (Wide)	1						X	X
–	28-18158-1	. . Hood Assy. (Wide)	1						X	X
–	28-18159-11	. . Instrument Face Panel (Wide)	1						X	X
–	28-18161-19	. . Radio/Switch Panel (Wide) (Used with 28-18166-7)	1							X
–	28-18161-11	. . Radio/Switch Panel (Wide)	1						X	X
– ΔΔ	28-18162-17	. . Side Panel (L.H.)	1						X	X
–	28-18162-15	. . Side Panel (L.H.) (Alternate, 3.50 in. wide cutout)	1						X	X
–	28-18162-13	. . Side Panel (L.H.) (Alternate, 2.50 in. wide cutout)	1						X	X
–	28-18162-14	. . Side Panel (R.H.)	1						X	X
–	28-18164-5	. . Glare Shield Assy. (Wide)	1						X	X
–†	8x3/8	. . PK Screw	21						X	X
–	A6195-8Z-1D	. . Tinnerman nut	7						X	X
–	MS20426A3-4	. . Rivet	14						X	X
10A**	28-18166-5	. Hood Console Assy. (Narrow)	1							X
10A	28-18166-3	. Hood Console Assy. (Narrow)	1						X	X
–	28-18158-3	. . Hood Assy. (Narrow)	1						X	X
–	28-18159-13	. . Instrument Face Panel (Narrow)	1						X	X
–	28-18161-17	. . Radio/Switch Panel (Narrow) (Used with 28-18166-5)	1							X
–	28-18161-15	. . Radio/Switch Panel (Narrow)	1						X	X
– ΔΔ	28-18162-17	. . Side Panel (L.H.)	1						X	X
–	28-18162-15	. . Side Panel (L.H.) (Alternate, 3.50 in. wide cutout)	1						X	X
–	28-18162-13	. . Side Panel (L.H.) (Alternate, 2.50 in. wide cutout)	1						X	X
–	28-18162-14	. . Side Panel (R.H.)	1						X	X
–	28-18164-3	. . Glare Shield Assy. (Narrow)	1						X	X
–†	8x3/8	. . PK Screw	21						X	X

UNCONTROLLED COPY WHEN DOWNLOADED OR PRINTED

Visit www.enstromhelicopter.com for instructions to order an original manual and to register for email notification updates.

FIGURE 9-4. 280F/FX CABIN FURNISHINGS

ITEM NUMBER	PART NUMBER	DESCRIPTION	QTY PER ASSY	MODELS AFFECTED						
				F-28A	280	F-28C	280C	F-28F	280F	280FX
–	A6195-8Z1D	. . Tinnerman nut	7						X	X
–	MS20426A3-4	. . Rivet	14						X	X
20	28-11622-1	. Carpet Flooring	1						X	X
20A	28-11622-21	. Vinyl Flooring (Alternate)	1						X	X
20A	28-11622-15	. Vinyl Flooring (Alternate) (Superseded by 28-11622-21)	1						X	X
30*	28-11608-13	. Scuff Plate	2						X	X
30	28-11608-11	. Scuff Plate (Superseded by 28-11608-11	2						X	X
40	AN530-6-8	. Screw	10						X	X
50	28-11395-1	. Cyclic Boot	2						X	X
60	AN531-6R8	. Screw	10						X	X
70	550	. Stud	10						X	X
80	AN531-6R10	. Screw	4						X	X
90	AN960-6L	. Washer	4						X	X
100	AN365-632A	. Nut	4						X	X
110	550	. Stud	4						X	X
–	28-16069-3	. Collective Shroud Installation	1						X	X
120	28-16070-7	. . Collective Shroud Assembly (S/S by 28-16070-101)	1						X	X
120 Δ	28-16070-101	. . Collective Shroud Assembly (S/S by 28-16070-103, -105)	1							X
120 ♦	28-16070-103	. . Collective Shroud Assembly	1							X
125 ♦	28-16070-105	. . Collective Cover Assembly	1							X
–	AN530-8R8	. . Screw	4						X	X
– Δ	8x1/2	. . Screw	1							X
130	28-11620-1	. Headliner	1						X	X
140	ECD4089-11	. Velcro Hook (1” Black)	A/R						X	X

UNCONTROLLED COPY WHEN DOWNLOADED OR PRINTED

Visit www.enstromhelicopter.com for instructions to order an original manual and to register for email notification updates.

FIGURE 9-4. 280F/FX CABIN FURNISHINGS

ITEM NUMBER	PART NUMBER	DESCRIPTION	QTY PER ASSY	MODELS AFFECTED						
				F-28A	280	F-28C	280C	F-28F	280F	280FX
150	ECD4089-15	. Velcro Loop (1” Black)	A/R						X	X
–	28-11623-1	Carpet Insert – Door Pocket (R.H)	1						X	X
–	28-11623-2	Carpet Insert – Door Pocket (L.H.)	1						X	X
160	28-11625-11	. Backwall Upholstery	1						X	X
170	28-11621-11	. Trim Closeout L.S.	1						X	X
180	28-11621-13	. Trim Closeout R.S.	1						X	X
190	MS24693S26	. Screw	10						X	X
200	AN960-6L	. Washer	10						X	X
210	AN635-632A	. Nut	10						X	X
220	550	. Stud	10						X	X
230	28-11404-13	. Collective Push Pull Rod Cover	1						X	X
240	AN526-832R8	. Screw	3						X	X
250	AN960-8L	. Washer	3						X	X
260	AN936A8	. Lock Washer	3						X	X
270	S8P270	. Plusnut	3						X	X

* Effectivity 280FX S/N 2134 and subsequent. Retrofittable to 280FX S/N 2001 and subsequent.

Δ S/N 2148 and subsequent. Retrofittable to S/N 2001 and subsequent.

♦ S/N 2167 and subsequent.

▲ S/N 2168 and subsequent.

** S/N 2167 and subsequent.

† Quantity 17 for 28-18166-5 and 28-18166-7 installations, respectively.

ΔΔ S/N 2168 and subsequent. Retrofittable S/N 2167. (Use alternate 28-18162-13 or 28-18162-15 if a fuse panel is installed.)

UNCONTROLLED COPY WHEN DOWNLOADED OR PRINTED

Visit www.enstromhelicopter.com for instructions to order an original manual and to register for email notification updates.

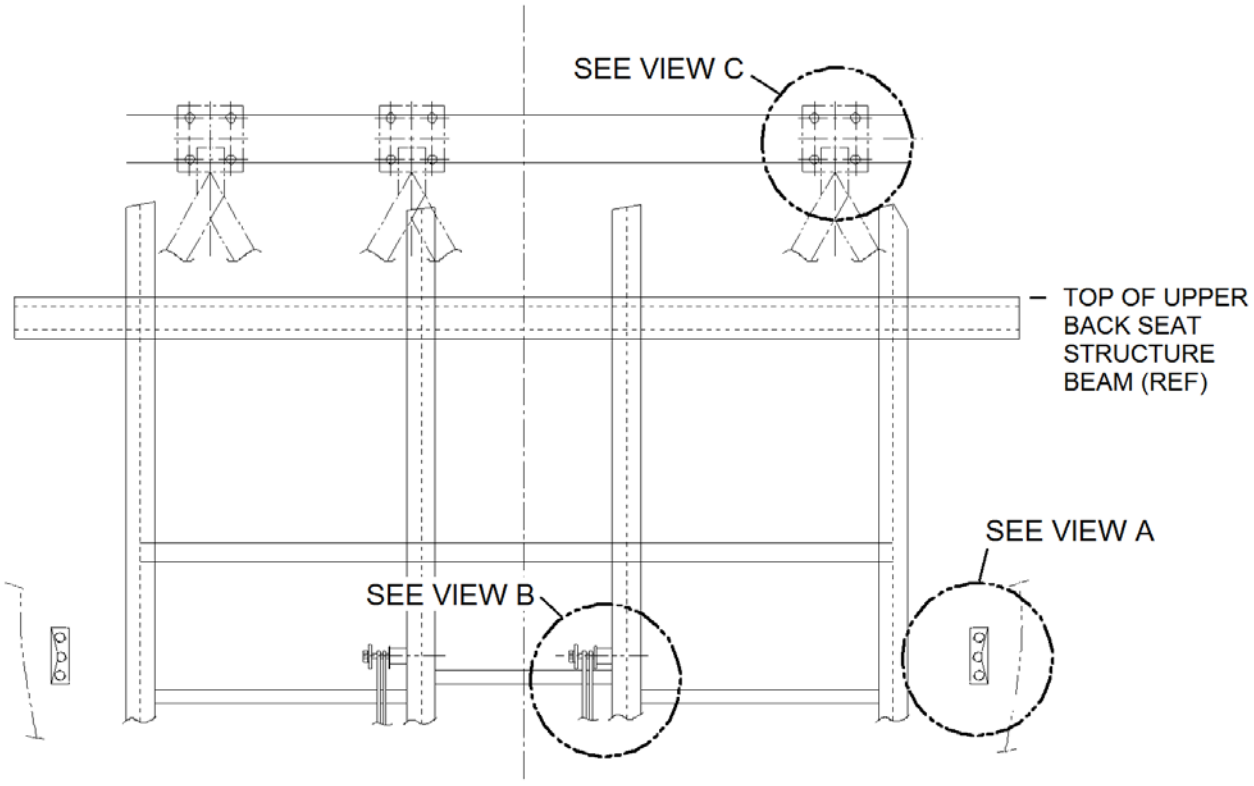

VIEW LOOKING AFT
(SEAT CUSHIONS AND SEAT DECK REMOVED)

F-28A/F-28C/F-28F: All S/N
280/280C/280F/280FX: All S/N

Sheet 1 of 2

FIGURE 9-5. CABIN FURNISHINGS – PASSENGER RESTRAINT SYSTEM

UNCONTROLLED COPY WHEN DOWNLOADED OR PRINTED

Visit www.enstromhelicopter.com for instructions to order an original manual and to register for email notification updates.

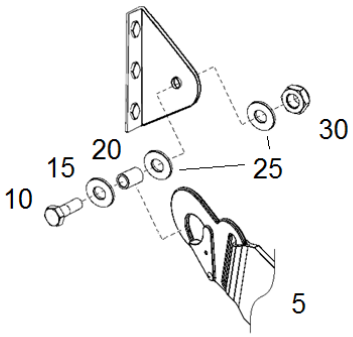

VIEW A

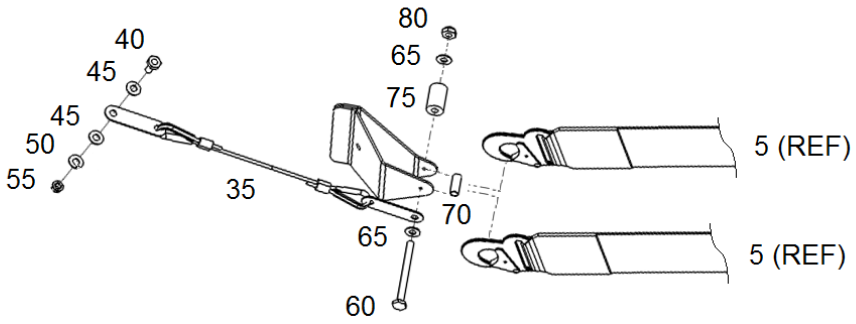

VIEW B

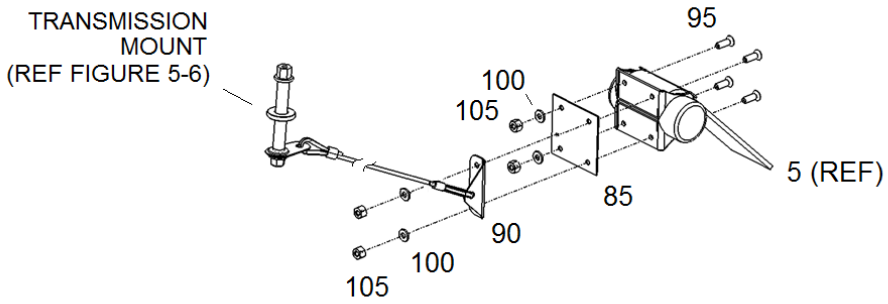

VIEW C

F-28A/F-28C/F-28F: All S/N
280/280C/280F/280FX: All S/N

Sheet 2 of 2

FIGURE 9-5. CABIN FURNISHINGS – PASSENGER RESTRAINT SYSTEM

UNCONTROLLED COPY WHEN DOWNLOADED OR PRINTED

Visit www.enstromhelicopter.com for instructions to order an original manual and to register for email notification updates.

FIGURE 9-5. CABIN FURNISHINGS – PASSENGER RESTRAINT SYSTEM

ITEM NUMBER	PART NUMBER	DESCRIPTION	QTY PER ASSY	MODELS AFFECTED						
				F-28A	280	F-28C	280C	F-28F	280F	280FX
–*	28-22210-9	Restraint Harness Installation	1	X	X	X	X	X	X	X
5	1-10-AM5201	. Restraint Harness (3-Point)	3	X	X	X	X	X	X	X
10	AN4-6A	. Bolt	2	X	X	X	X	X	X	X
15	NAS1149F0332P	. Washer	2	X	X	X	X	X	X	X
20	4119780-23	. Spacer	2	X	X	X	X	X	X	X
20**	28-16348-1	. Spacer (Alternate) (Inactive)	2	X	X	X	X	X	X	X
25	ECD050-11	. Washer	4	X	X	X	X	X	X	X
30	MS21044N4	. Nut	2	X	X	X	X	X	X	X
35	28-11468-2	. Seat Belt Cable Assembly	2	X	X	X	X	X	X	X
40	AN3-4A	. Bolt	2	X	X	X	X	X	X	X
45	NAS1149D0316J	. Washer	4	X	X	X	X	X	X	X
50	MS35338-43	. Lock Washer	2	X	X	X	X	X	X	X
55	MS35650-302	. Nut	2	X	X	X	X	X	X	X
60	AN3-21A	. Bolt	2	X	X	X	X	X	X	X
65	NAS1149D0316J	. Washer	4	X	X	X	X	X	X	X
70	28-11466-1	. Spacer	2	X	X	X	X	X	X	X
75	28-11464-1	. Spacer	2	X	X	X	X	X	X	X
80	MS21044N3	. Nut	2	X	X	X	X	X	X	X
85	28-22208-11	. Plate	3	X	X	X	X	X	X	X
90	28-22209-103	. Reel Support Bracket Assembly	3	X	X	X	X	X	X	X
90	28-22209-101	. Reel Support Bracket Assembly (Inactive)	3	X	X	X	X	X	X	X
95	MS24694-S52	. Screw	12	X	X	X	X	X	X	X
100	NAS1149F0363P	. Washer	12	X	X	X	X	X	X	X
105	MS21044N3	. Nut	12	X	X	X	X	X	X	X

* Eligible for all F-28 series and 280 series helicopters if not originally equipped from the factory with a 3-place restraint system (lap and shoulder). To convert to a 3-place restraint system, install quantity 1 each of Item 85 and Item 90 and quantity 4 each of 95, 100, and 105, per each passenger restraint required. Contact Enstrom Product Support for additional assistance.

UNCONTROLLED COPY WHEN DOWNLOADED OR PRINTED

Visit www.enstromhelicopter.com for instructions to order an original manual and to register for email notification updates.

** Ensure proper thread protrusion if using this spacer.

UNCONTROLLED COPY WHEN DOWNLOADED OR PRINTED

Visit www.enstromhelicopter.com for instructions to order an original manual and to register for email notification updates.

INTENTIONALLY LEFT BLANK

UNCONTROLLED COPY WHEN DOWNLOADED OR PRINTED

Visit www.enstromhelicopter.com for instructions to order an original manual and to register for email notification updates.

SECTION 10

UTILITY SYSTEMS

TABLE OF CONTENTS

		Cover Page	10-1
▌		Table of Contents	10-1
▌	10-1	Cabin Heating Installation (F-28A)	10-2
▌	10-2	Cabin Heating Installation (280)	10-4
▌	10-3	Cabin Heating Installation (F-28C, 280C)	10-7
▌	10-4	Cabin Heating Installation (Current Production)	10-10

UNCONTROLLED COPY WHEN DOWNLOADED OR PRINTED

Visit www.enstromhelicopter.com for instructions to order an original manual and to register for email notification updates.

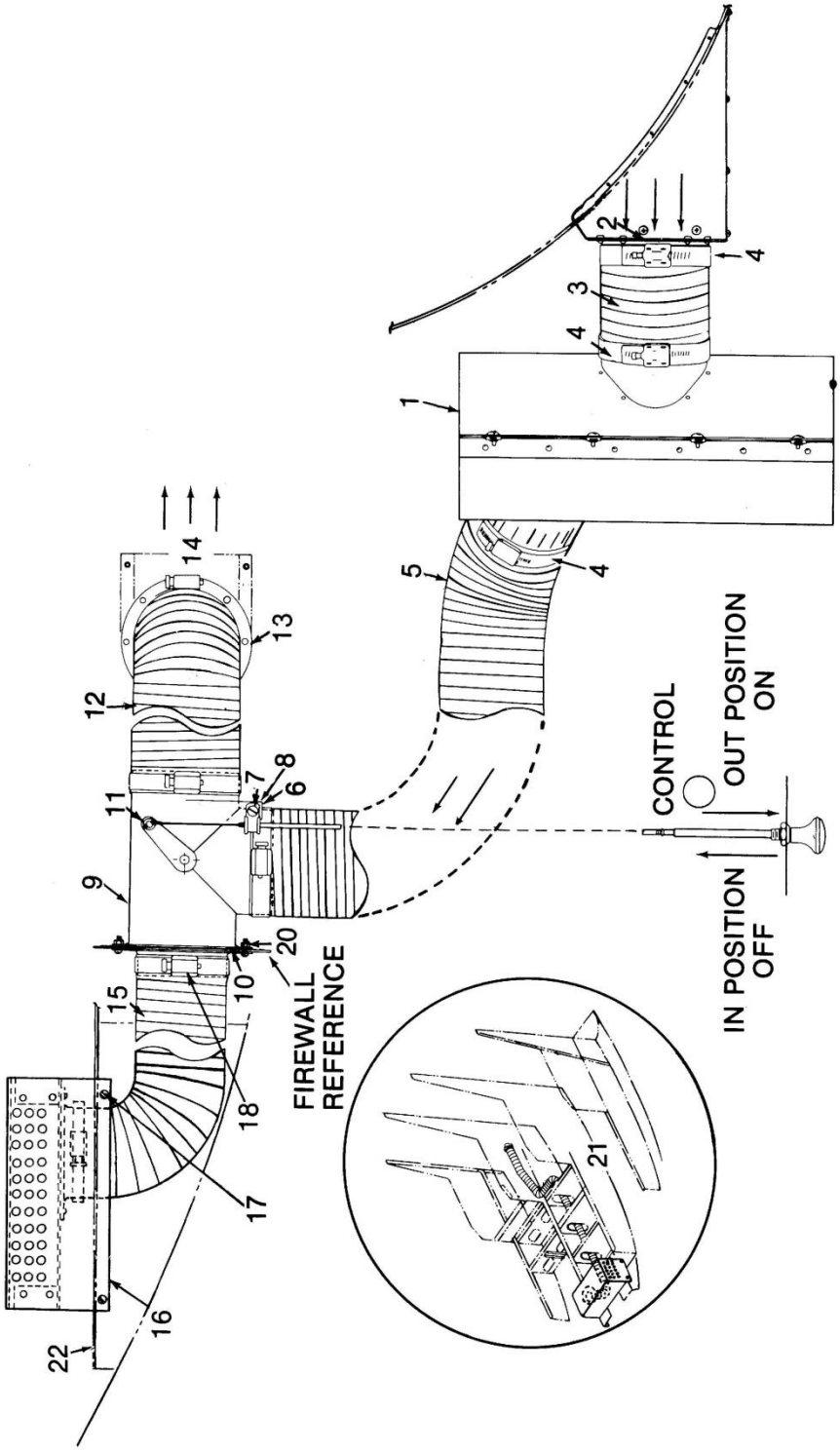

FIGURE 10-1. CABIN HEATING INSTALLATION (F-28A)

UNCONTROLLED COPY WHEN DOWNLOADED OR PRINTED

Visit www.enstromhelicopter.com for instructions to order an original manual and to register for email notification updates.

FIGURE 10-1. CABIN HEATING INSTALLATION (F-28A)

ITEM NUMBER	PART NUMBER	DESCRIPTION	QTY PER ASSY	MODELS AFFECTED						
				F-28A	280	F-28C	280C	F-28F	280F	280FX
–	28-127000-1	F-28A Cabin Heating Assembly	REF	X						
1	28-125007	. Shroud Assembly	1	X						
2	28-12305	. Ducting Stub	1	X						
3	28-127000-11	. Hose	1	X						
4	20044S	. Clamp	6	X						
5	28-12701-5	. Hose	1	X						
6	755-2-2-6	. Clamp	1	X						
7	AN530-8-8	. Screw	1	X						
8	A1789-8Z1	. Tinnerman Nut	1	X						
9	28-12714	. Valve Assembly	1	X						
10	28-12718	. Ducting Stub	1	X						
11	AN380-2-2	. Cotter Pin	1	X						
–	AN960-416	. Washer	1	X						
12	28-12701-4	. Hose	1	X						
13	28-12305	. Ducting Stub	1	X						
14	28-12706	. Hot Air Deflector	1	X						
15	28-12701-3	. Hose	1	X						
16	28-12705	. Heater Outlet Assembly	1	X						
17	8x1/2	. Screw Type "B"	4	X						
18	20040S	. Clamp	2	X						
19	A-740-12	. Push-Pull Control	1	X						
20	AN515-8-7	. Screw	6	X						
–	AN365-8	. Nut	6	X						
–	AN960-8	. Washer	12	X						
21	AN743-13	. Clip	1	X						
–	AN742-40	. Clamp	1	X						
22	28-11452	. Front Floor Panel Assembly	1	X						

UNCONTROLLED COPY WHEN DOWNLOADED OR PRINTED

Visit www.enstromhelicopter.com for instructions to order an original manual and to register for email notification updates.

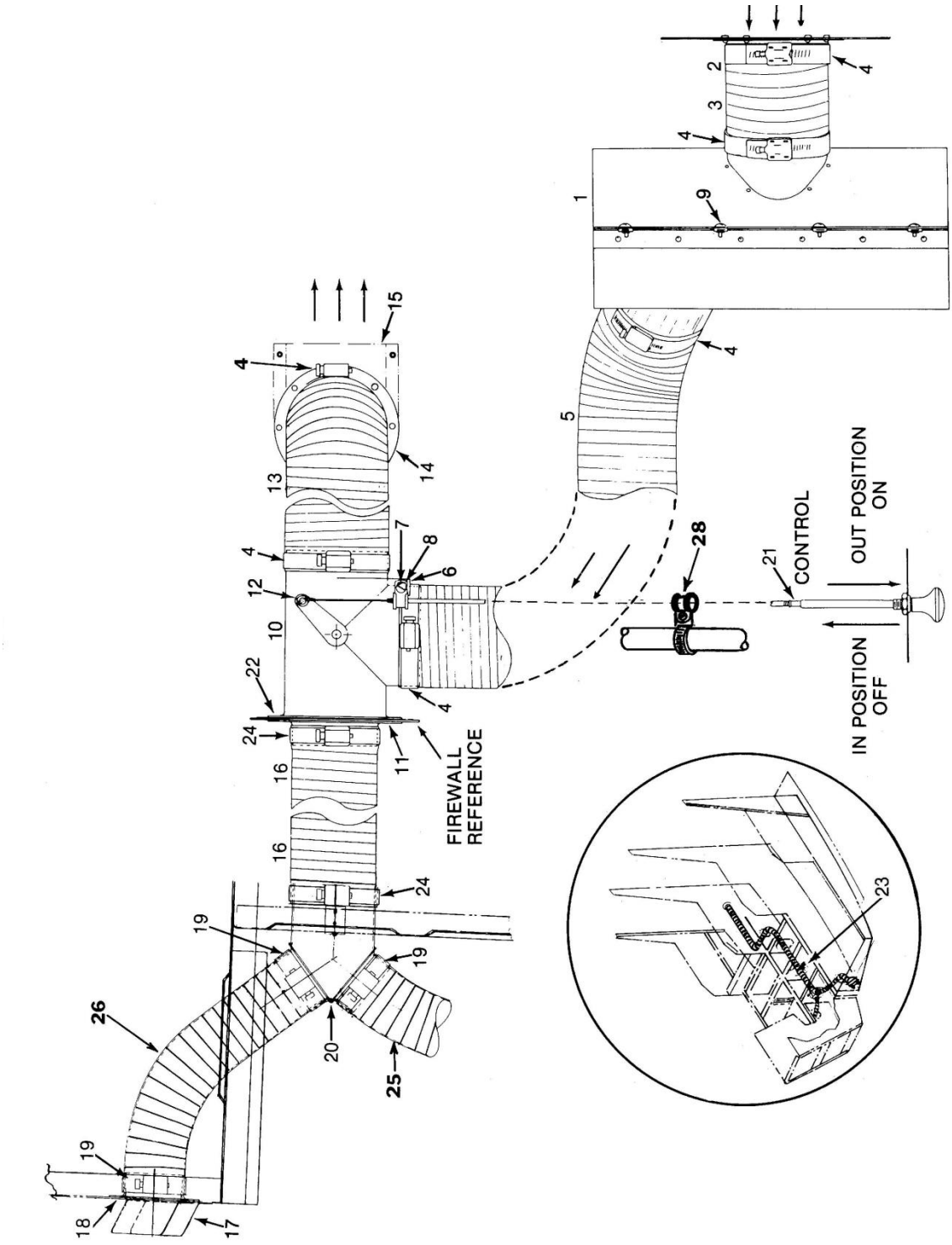

FIGURE 10-2. CABIN HEATING INSTALLATION (280)

UNCONTROLLED COPY WHEN DOWNLOADED OR PRINTED

Visit www.enstromhelicopter.com for instructions to order an original manual and to register for email notification updates.

FIGURE 10-2. CABIN HEATING INSTALLATION (280)

ITEM NUMBER	PART NUMBER	DESCRIPTION	QTY PER ASSY	MODELS AFFECTED						
				F-28A	280	F-28C	280C	F-28F	280F	280FX
–	28-127001	280 Cabin Heating Assembly	REF		X					
1	28-125007	. Shroud Assembly	1		X					
2	28-12305	. Ducting Stub	1		X					
3	28-127000-11	. Flex Line	1		X					
4	QS200M44S	. Clamp	6		X					
5	28-12701-5	. Aeroquip Hose	1		X					
6	755-2-2-6	. Adel Clamp	1		X					
7	AN530-8-8	. Screw	1		X					
8	A1789-8Z1	. Tinnerman Nut	1		X					
9	8x1/2	. Type B Screw	9		X					
10	28-12714	. Valve Assembly	1		X					
11	28-12718	. Ducting Stub	1		X					
12	AN380-2-2	. Cotter Pin	1		X					
–	AN960-416L	. Washer	1		X					
13	28-12701-4	. Aeroquip Hose	1		X					
14	28-12305	. Ducting Stub	1		X					
15	28-12706	. Hot Air Deflector	1		X					
16	280-127500-11	. Hose	1		X					
17	280-127507-11	. Deflector	4		X					
18	280-127505-13	. Ducting Stub	2		X					
19	QS100-M28S	. Clamp	4		X					
20	280-127502-1	. Ducting Splitter Assembly	1		X					
21	A-740-12	. Push Pull Control	1		X					
22	AN515-8-7	. Screw	6		X					
–	AN365-832	. Nut	6		X					
–	AN960-8L	. Washer	2		X					
23	AN743-13	. Adel Clip	1		X					

UNCONTROLLED COPY WHEN DOWNLOADED OR PRINTED

Visit www.enstromhelicopter.com for instructions to order an original manual and to register for email notification updates.

FIGURE 10-2. CABIN HEATING INSTALLATION (280)

ITEM NUMBER	PART NUMBER	DESCRIPTION	QTY PER ASSY	MODELS AFFECTED						
				F-28A	280	F-28C	280C	F-28F	280F	280FX
–	MS21919-G38	. Clamp	1		X					
24	QS-200-M40S	. Clamp	2		X					
25	28-127520-17	. Hose	1		X		X	X	X	
26	28-127520-19	. Hose	1		X		X	X	X	
28	AN742-D48	. Clamp	1		X		X	X	X	
–	AN935-8	. Lock Washer								
–	AN960-8L	. Washer								
–	AN515-8R8	. Screw								

UNCONTROLLED COPY WHEN DOWNLOADED OR PRINTED

Visit www.enstromhelicopter.com for instructions to order an original manual and to register for email notification updates.

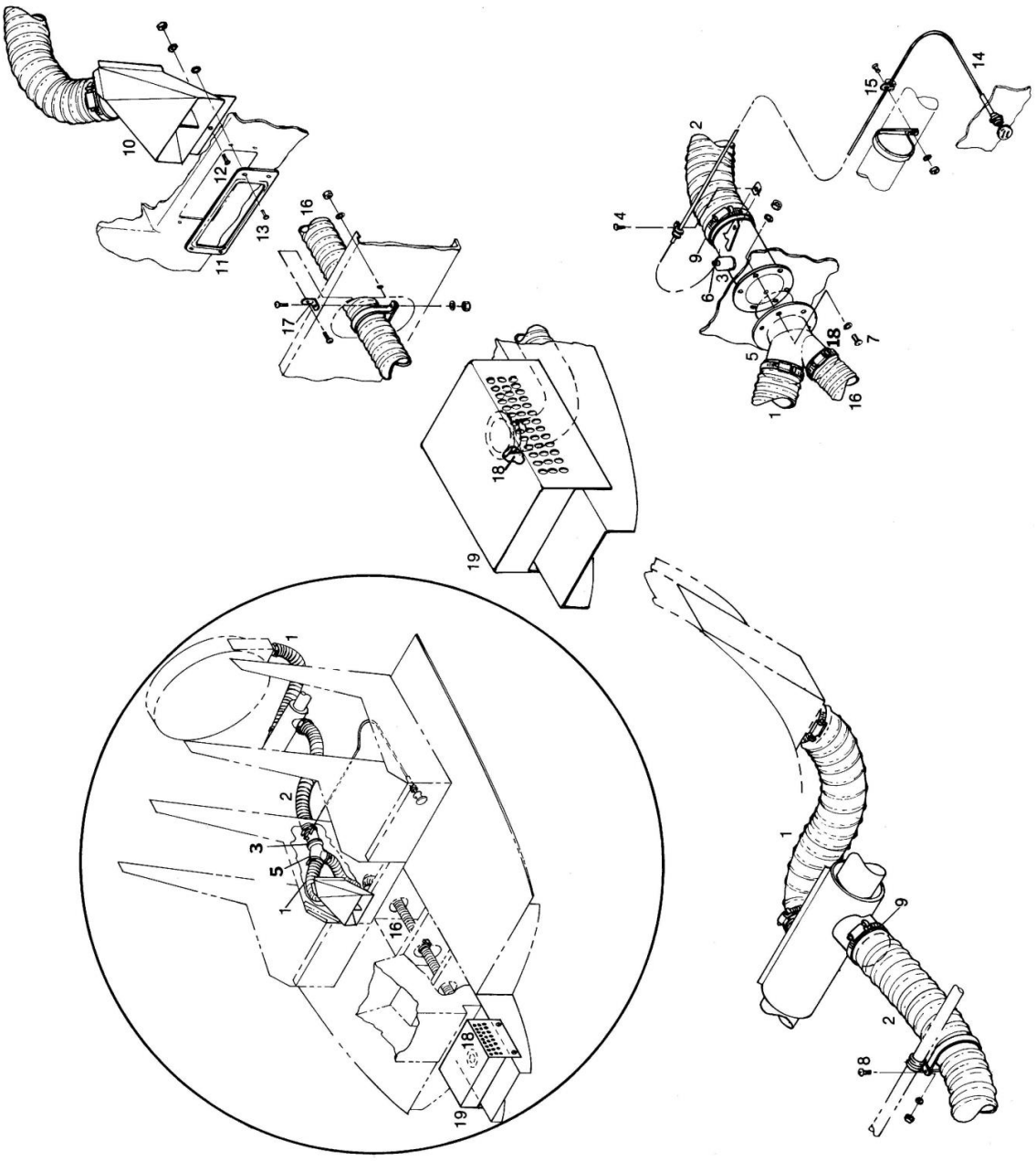

F-28A: All S/N
F-28C: Prior to S/N 468

FIGURE 10-3. CABIN HEATING INSTALLATION (F-28C, 280C)

UNCONTROLLED COPY WHEN DOWNLOADED OR PRINTED
Visit www.enstromhelicopter.com for instructions to order an original manual and to register for email notification updates.

FIGURE 10-3. CABIN HEATING INSTALLATION (F-28C, 280C)

ITEM NUMBER	PART NUMBER	DESCRIPTION	QTY PER ASSY	MODELS AFFECTED						
				F-28A	280	F-28C	280C	F-28F	280F	280FX
–**	28-127002-3	F-28A - F-28C Cabin Heater Installation	REF	X		X				
1	28-127520-13	. Heater Ducting	2	X		X				
2	28-127520-11	. Heater Ducting	1	X		X				
3	28-127510-1	. Valve-Cabin Heat	1	X		X				
4	AN530-8R8	. Screw	1	X		X				
–	755-2-2-6	. . Clamp	1	X		X				
–	A1789-8Z1	. . Tinnerman Nut	1	X		X				
5	28-127509-1	. Adapter	1	X		X				
6	AN960-416L	. Washer	1	X		X				
–	AN381-2-8	. . Cotter Pin	1	X		X				
7	AN515-8R7	. Screw	6	X		X				
–	AN935-8	. . Lock Washer	6	X		X				
–	AN960-8L	. . Washer	6	X		X				
–	AN340-8	. . Nut	6	X		X				
8	AN515-8R7	. Screw	1	X		X				
–	AN960-8L	. . Washer	1	X		X				
–	AN364-832A	. . Nut	1	X		X				
–	AN742D48	. . Clamp	1	X		X				
–	MS21919-F8	. . Clamp	1	X		X				
9	QS200-M44S	. Clamp	6	X		X				
10*	28-127508-1	. Duct Outlet	1			X				
11	28-127521-11	. Cover-Duct Outlet	1			X				
12	AN526-832R8	. Screw	1			X				
–	AN960-10	. . Washer	1			X				
–	AN960-8L	. . Washer	1			X				
–	AN364-832A	. . Nut	1			X				
13	CR163-4-4	. Rivet	4			X				

UNCONTROLLED COPY WHEN DOWNLOADED OR PRINTED

Visit www.enstromhelicopter.com for instructions to order an original manual and to register for email notification updates.

FIGURE 10-3. CABIN HEATING INSTALLATION (F-28C, 280C)

ITEM NUMBER	PART NUMBER	DESCRIPTION	QTY PER ASSY	MODELS AFFECTED						
				F-28A	280	F-28C	280C	F-28F	280F	280FX
–	AN960-4L	. . Washer	4			X				
14	A-740-12	. Push-Pull Control	1	X		X				
15	AN742D48	. Clamp	1	X		X				
–	755-2-2-6	. . Clamp	1	X		X				
–	AN515-8R7	. . Screw	1	X		X				
–	AN960-8L	. . Washer	1	X		X				
–	AN364-832A	. . Nut	1	X		X				
16	28-127520-25	. Hose Ducting	1	X		X				
17	AN743-13	. Clip	1	X		X				
–	AN742D38	. . Clamp	1	X		X				
–	AN515-8R8	. . Screw	2	X		X				
–	AN960-8L	. . Washer	4	X		X				
–	AN364-832A	. . Nut	2	X		X				
18	QS200-M40S	. . Clamp	2	X		X				
19	28-12705	. Heater Outlet Assembly	1	X		X				

* Effective F-28C S/N 468 and subsequent.

UNCONTROLLED COPY WHEN DOWNLOADED OR PRINTED

Visit www.enstromhelicopter.com for instructions to order an original manual and to register for email notification updates.

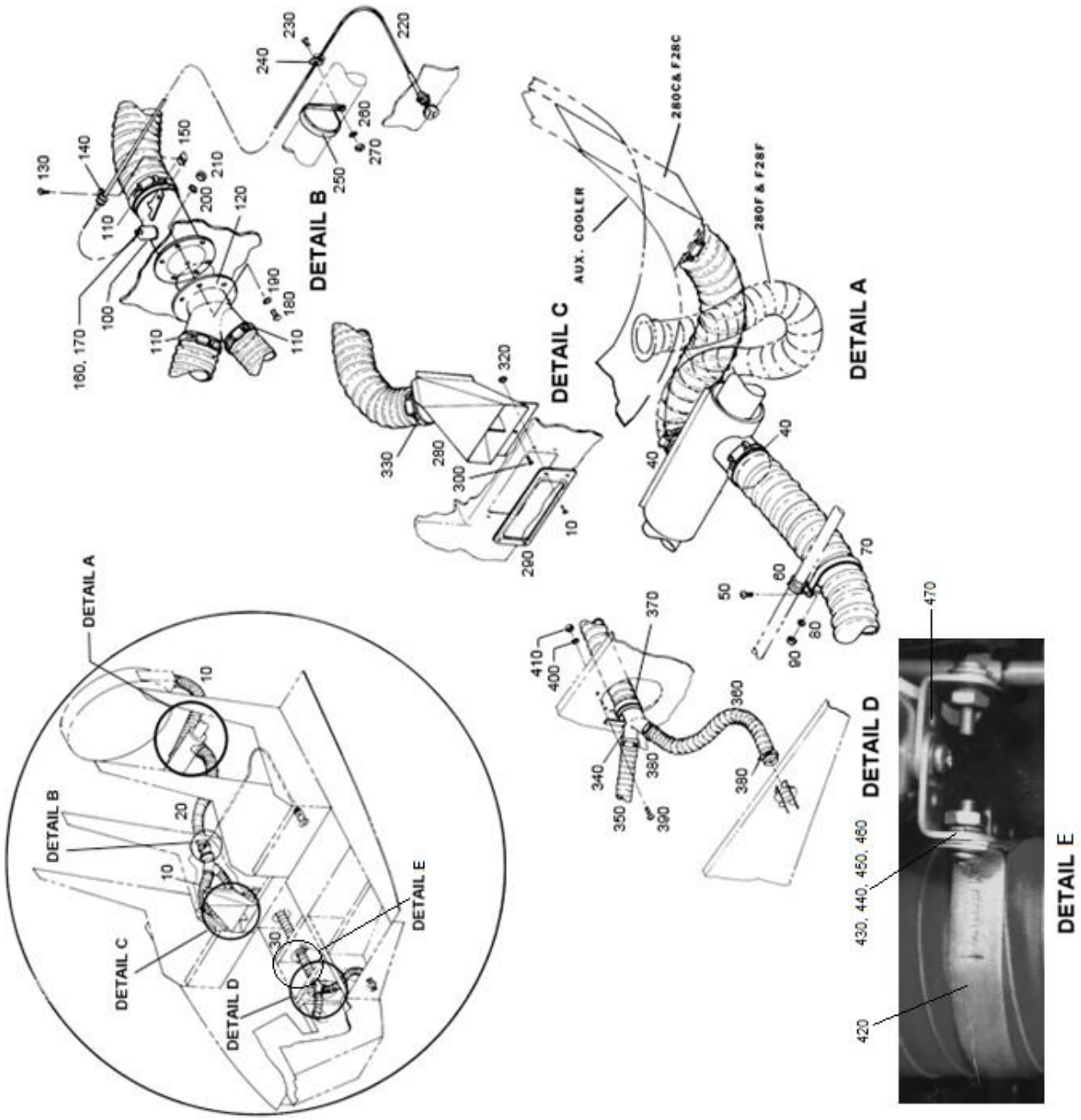

F-28C: S/N 468 and Subsequent
F-28F: S/N 704 and Subsequent
280C/F/FX: All S/N

FIGURE 10-4. CABIN HEATING INSTALLATION (CURRENT PRODUCTION)

UNCONTROLLED COPY WHEN DOWNLOADED OR PRINTED

Visit www.enstromhelicopter.com for instructions to order an original manual and to register for email notification updates.

FIGURE 10-4. CABIN HEATING INSTALLATION (CURRENT PRODUCTION)

ITEM NUMBER	PART NUMBER	DESCRIPTION	QTY PER ASSY	MODELS AFFECTED						
				F-28A	280	F-28C	280C	F-28F	280F	280FX
–*	28-127002-5	Heater Installation – Cabin	REF			X	X	X	X	X
–	28-127002-1	Cabin Heater Installation (Superseded by 28-127002-5)	REF			X	X	X	X	
10*	28-127520-29	. Heater Ducting	2			X	X	X	X	X
10	28-127520-13	. Heater Ducting (Superseded by 28-127520-29)	2			X	X	X	X	
20	28-127520-11	. Heater Ducting	1			X	X	X	X	X
30	28-127520-15	. Hose-Ducting	1			X	X	X	X	X
40*	QS200-M40S	. Clamp	2			X	X	X	X	X
40	QS200-M44S	. Clamp (Superseded by QS200-M44S	2			X	X	X	X	
50	AN515-8R8	. Screw	1			X	X	X	X	X
60	MS21919F8	. Clamp	1			X	X	X	X	X
70**	MS21919WG38	. Clamp	1			X	X	X	X	X
70	AN742D48	. Clamp (Superseded by MS21919WG38)	1			X	X	X	X	X
80	AN960-8L	. Washer	1			X	X	X	X	X
90	AN364-832A	. Nut	1			X	X	X	X	X
100	28-127510-1	. Valve-Cabin Heat	1			X	X	X	X	X
110	QS200-M44S	. Clamp	3			X	X	X	X	X
120*	28-127523-1	. Adapter	1			X	X	X	X	X
120	28-127509-1	. Adapter	1			X	X	X	X	
130	AN530-8R8	. Screw	1			X	X	X	X	X
140**	MS21919WDG3	. Clamp	1			X	X	X	X	X
140	755-2-2-6	. Clamp (Superseded by MS21919WDG3)	1			X	X	X	X	X
150	A1789-8Z1	. Tinnerman Nut	1			X	X	X	X	X
160	AN960-416L	. Washer	1			X	X	X	X	X

UNCONTROLLED COPY WHEN DOWNLOADED OR PRINTED

Visit www.enstromhelicopter.com for instructions to order an original manual and to register for email notification updates.

FIGURE 10-4. CABIN HEATING INSTALLATION (CURRENT PRODUCTION)

ITEM NUMBER	PART NUMBER	DESCRIPTION	QTY PER ASSY	MODELS AFFECTED						
				F-28A	280	F-28C	280C	F-28F	280F	280FX
170	AN381-2-8	. Cotter Pin	1			X	X	X	X	X
180	AN515-8R8	. Screw	6			X	X	X	X	X
190	AN935-8	. Lock Washer	6			X	X	X	X	X
200	AN960-8L	. Washer	6			X	X	X	X	X
210	AN340-8	. Nut	6			X	X	X	X	X
220**	A-740-12	. Control Assembly	1			X	X	X	X	X
220	3A3408-2	. Push-Pull Control	1			X	X	X	X	X
230	AN515-8R8	. Screw	1			X	X	X	X	X
240**	MS21919WDG3	. Clamp	1			X	X	X	X	X
240	755-2-2-6	. Clamp (Superseded by MS21919WDG3)	1			X	X	X	X	X
250**	MS21919WG38	. Clamp	1			X	X	X	X	X
250	AN742D48	. Clamp (Superseded by MS21919WG38)	1			X	X	X	X	X
260	AN960-8L	. Washer	1			X	X	X	X	X
270	AN364-832A	. Nut	1			X	X	X	X	X
280*	28-127524-1	. Duct Assembly	1			X	X	X	X	X
280	28-127508-1	. Duct Outlet (Superseded by 28-127524-1)	1			X	X	X	X	
290	28-127521-11	. Cover-Duct Outlet	1			X	X	X	X	X
300	AN526-832R7	. Screw	1			X	X	X	X	X
310	CCR274SS-3-02	. Rivet	4					X		X
310	CR163-4-4	. Rivet (Superseded by CCR274SS-3-02)	4			X	X	X	X	X
320	AN960-4L	. Washer	4			X	X	X	X	X
330	QS200-M44S	. Clamp	1			X	X	X	X	X
340	28-127502-1	. Ducting Splitter	1			X	X	X	X	X
350	28-127520-19	. Hose-Ducting	1			X	X	X	X	X
360	28-127520-17	. Hose-Ducting	1			X	X	X	X	X

UNCONTROLLED COPY WHEN DOWNLOADED OR PRINTED
Visit www.enstromhelicopter.com for instructions to order an original manual and to register for email notification updates.

FIGURE 10-4. CABIN HEATING INSTALLATION (CURRENT PRODUCTION)

ITEM NUMBER	PART NUMBER	DESCRIPTION	QTY PER ASSY	MODELS AFFECTED						
				F-28A	280	F-28C	280C	F-28F	280F	280FX
370	QS200-M40S	. Clamp	1			X	X	X	X	X
380	QS200-M28S	. Clamp	4			X	X	X	X	X
390	AN526-832R7	. Screw	1			X	X	X	X	X
400	AN960-8L	. Washer	1			X	X	X	X	X
410	AN364-832A	. Nut	1			X	X	X	X	X
420	MS21919WG38	. Clamp	1			X	X	X	X	X
430	MS35206-245	. Screw	1			X	X	X	X	X
440	NAS1149FN816P	. Washer	2			X	X	X	X	X
450	MS35338-42	. Lock Washer	1			X	X	X	X	X
460	MS35649-282	. Nut	1			X	X	X	X	X
470	AN743-13	. Clip	1			X	X	X	X	X

* Effectivity F-28C S/N 468 and subsequent, 280C S/N 1230 and subsequent, 280F S/N 1510 and subsequent, and F-28F S/N 704 and 706 and subsequent.

** Effectivity F-28F S/N 831 and subsequent and 280FX S/N 2136 and subsequent. Retrofittable to F-28 models S/N 509 and subsequent and 280 models S/N 2001 and subsequent.

UNCONTROLLED COPY WHEN DOWNLOADED OR PRINTED

Visit www.enstromhelicopter.com for instructions to order an original manual and to register for email notification updates.

INTENTIONALLY LEFT BLANK

UNCONTROLLED COPY WHEN DOWNLOADED OR PRINTED
Visit www.enstromhelicopter.com for instructions to order an original manual and to register for email notification updates.

SECTION 11

INSTRUMENTS

TABLE OF CONTENTS

	Cover Page	11-1
	Table of Contents	11-1
11-1	Early F-28A Instrument Panels	11-2
11-2	F-28C Instrument Panel Installation	11-6
11-3	280C and 280F Instrument Panel Installation	11-10
11-4	280 Instrument Panel Installation	11-15
11-5	F-28F and 280FX Instrument Panel Installation (12V)	11-19
11-6	F-28F and 280FX Instrument Panel Installation (24V)	11-26
11-7	F-28F Instrument Panel Installation (24V) (F-28F S/N 833 and Subsequent)	11-31
11-8	280FX Instruments and Instrument Panel (280FX S/N 2166 and prior)	11-40
11-9	280FX Instruments and Instrument Panel (280FX S/N 2167 and Subsequent)	11-50
11-10	F-28A and 280 Instrument Line Pylon Location	11-58
11-11	Pitot Static System Installation	11-60
11-12	Instrument Lines Cabin and Panel	11-63
11-13	F-28A and 280 Instrument Lines Cabin and Panel	11-65
11-14	Instrument Line Installation	11-67
11-15	Instrument/System Line Installation	11-70
11-16	Turbine Inlet Temperature Indicator Installation	11-75
11-17	Graphic Engine Monitor	11-77
11-18	Mechanical Tachometer Drive Installation	11-80
11-19	EDM-700-4C Installation	11-83
11-20	Placard Bracket Installation	11-90
11-21	Placard Installation	11-94

UNCONTROLLED COPY WHEN DOWNLOADED OR PRINTED

Visit www.enstromhelicopter.com for instructions to order an original manual and to register for email notification updates.

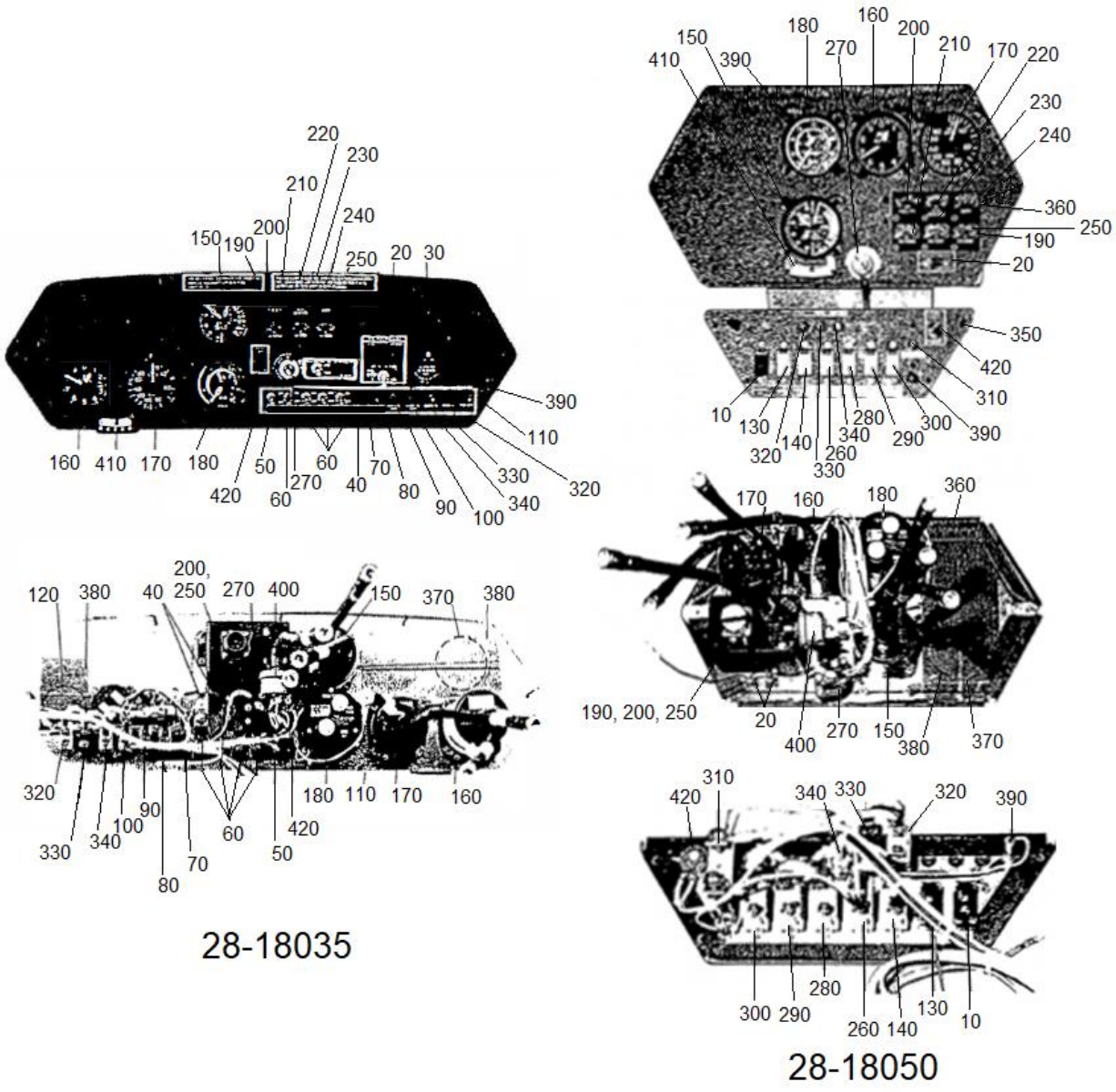

FIGURE 11-1. EARLY F-28A INSTRUMENT PANELS

UNCONTROLLED COPY WHEN DOWNLOADED OR PRINTED

Visit www.enstromhelicopter.com for instructions to order an original manual and to register for email notification updates.

FIGURE 11-1. EARLY F-28A INSTRUMENT PANELS

ITEM NUMBER	PART NUMBER	DESCRIPTION	QTY PER ASSY	MODELS AFFECTED						
				F-28A	280	F-28C	280C	F-28F	280F	280FX
–♦	28-18035	Instrument Installation	REF	X						
–♦	28-18050	Instrument Installation	REF	X						
10	8134K21A1T50	. Master Switch	1	X						
20	NO NUMBER	. Fuel Pressure Warning System	1	X						
–	804-1710-0332-504	. Press-to-Test Light (Green)	1	X						
–	803-1710-0331-504	. Press-to-Test Light (Red)	1	X						
–	1815	. Bulb	2	X						
–	7270-1-7 1/2	. Circuit Breaker Switch	1	X						
30	773-4/50 VDC	. Hour Meter	1	X						
40	MP-160-012-70	. 70 Amp Circuit Breaker	1	X						
50	511T1-2	. Toggle Switch Master	1	X						
60	511TS1-2	. Toggle Switch	5	X						
70	1500-052-2	. 2 Amp Panel Light Circuit Breaker	1	X						
80	507-507-101	. 7.5 Amp Navigation Light Circuit Breaker	1	X						
90	700-001-15	. 15 Amp Anti-Collision Light Circuit Breaker	1	X						
100	700-001-20	. 20 Amp Landing Light Circuit Breaker	1	X						
110	28-18036	. Instrument Panel	1	X						
120	28-18036-10	. Filler Plate 2.25” Diameter	A/R	X						
130	8134K21A1M52	. Alternator Switch	1	X						
140	20TC2-CA-7.5	. Navigation Light Circuit Breaker Switch	1	X						
150	UI6082-H61	. Manifold Pressure Gauge	1	X						
160	5934	. Altimeter	1	X						
170	8000T	. Airspeed Indicator	1	X						
180	65-29AP	. Tachometer	1	X						
190	ECD071-11	. Instrument Cluster	1	X						

UNCONTROLLED COPY WHEN DOWNLOADED OR PRINTED

Visit www.enstromhelicopter.com for instructions to order an original manual and to register for email notification updates.

FIGURE 11-1. EARLY F-28A INSTRUMENT PANELS

ITEM NUMBER	PART NUMBER	DESCRIPTION	QTY PER ASSY	MODELS AFFECTED						
				F-28A	280	F-28C	280C	F-28F	280F	280FX
190	22-169-09-1L	. Engine Instrument Cluster (Replaced by ECD071-11)	1	X						
200	ECD071-3	. . Fuel Quantity Gauge	1	X						
200	169E-910-14-4L	. . Fuel Quantity Gauge (Replaced by ECD071-3)	1	X						
210	ECD071-6	. . Engine Oil Pressure Gauge	1	X						
210	169E-914-1L	. . Engine Oil Pressure Gauge (Replaced by ECD071-6)	1	X						
220	ECD071-4	. . MRGB Oil Temperature Gauge	1	X						
220	169E-910-15L	. . MRGB Oil Temperature Gauge (Replaced by ECD071-4)	1	X						
230	ECD071-7	. . Engine Oil Temperature Gauge	1	X						
230	169E-910-11L	. . Engine Oil Temperature Gauge (Replaced by ECD071-7)	1	X						
240	ECD071-5	. . Ammeter	1	X						
240	169E-909-2L	. . Ammeter (Replaced by ECD071-5)	1	X						
250	ECD071-8	. . Engine Cylinder Temperature Gauge	1	X						
250	169E-910-12L	. . Engine Cylinder Temperature Gauge (Replaced by ECD071-8)	1	X						
260	20TC2-CA-3	. Panel Light Circuit Breaker Switch	1	X						
270	10-357290-1	. Ignition Switch	1	X						
280	20TC2-CA-15	. Anti-Collision Light Circuit Breaker Switch	1	X						
290	20TC2-CA-7.5	. Boost Pump Circuit Breaker Switch	1	X						
300	20TC2-CA-20	. Landing Light Circuit Breaker Switch	1	X						
310	MP-100-012-70	. Alternator Circuit Breaker (70 Amp)	1	X						
320	507-507-101	. 7.5 Amp Trim Motor Circuit Breaker	1	X						

Visit www.enstromhelicopter.com for instructions to order an original manual and to register for email notification updates.

FIGURE 11-1. EARLY F-28A INSTRUMENT PANELS

ITEM NUMBER	PART NUMBER	DESCRIPTION	QTY PER ASSY	MODELS AFFECTED						
				F-28A	280	F-28C	280C	F-28F	280F	280FX
330	1500-052-1	. 1 Amp Instrument Circuit Breaker	1	X						
340	507-507-101	. 7.5 Amp Ignition Circuit Breaker	1	X						
–	41EN-G5-2312	. Indicator Light (Green)	1	X						
–	41EN-G3-2311	. Indicator Light (Red)	1	X						
350	28-18051	. Switch Panel	1	X						
360	28-18049	. Instrument Panel	1	X						
370	28-18036-9	. Filler Plate 3.08” Diameter	A/R	X						
380	222	. Kendall Polyken Cloth Tape	A/R	X						
–	C-2400L4VT-AB	. Airpath Compass	1	X						
–	330	. Compass Bulb	1	X						
–	1592-30	. Scott Outside Air Temperature Gauge	1	X						
390	A8970B-1-330	. Instrument Light	9	X						
–	330	. Instrument Bulb	9	X						
–	22-370-60	. Shunt, 50 Millivolt	1	X						
400	2904-33F5	. Pressure Switch	1	X						
410	1040	. Ball Bank Indicator	1	X						
420	KN500B1/8	. Knob	1	X						
–	0110	. Rheostat	1	X						
–*	41EN-G3-2311	. Starter Engaged Warning Light (Red)	1	X						
–*	41EN-G3-2311	. Alternator Discharge Light (Red)	1	X						
–*	41EN-G3-2313	. Low Fuel Light (Amber)	1	X						

♦ Information contained herein represents components as installed at the time of manufacture.

* Optional equipment.

UNCONTROLLED COPY WHEN DOWNLOADED OR PRINTED

Visit www.enstromhelicopter.com for instructions to order an original manual and to register for email notification updates.

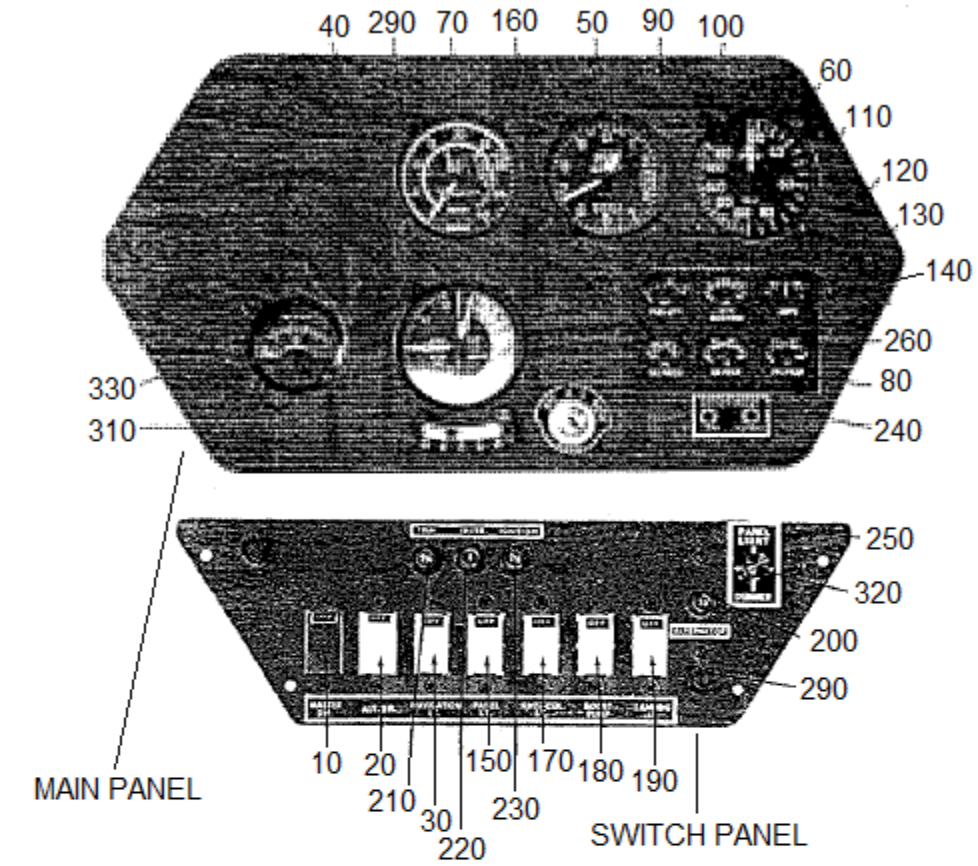

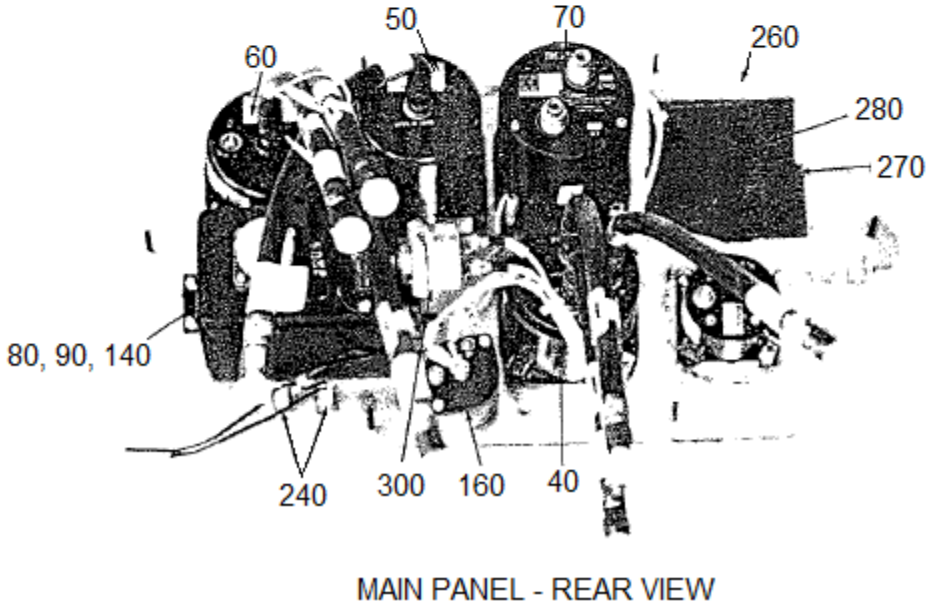

MAIN PANEL - REAR VIEW

FIGURE 11-2. F-28C INSTRUMENT PANEL INSTALLATION

Visit www.enstromhelicopter.com for instructions to order an original manual and to register for email notification updates.

FIGURE 11-2. F-28C INSTRUMENT PANEL INSTALLATION

ITEM NUMBER	PART NUMBER	DESCRIPTION	QTY PER ASSY	MODELS AFFECTED						
				F-28A	280	F-28C	280C	F-28F	280F	280FX
–♦∞	28-18050	Instrument Installation	REF			X				
10	TIGM54-1C-RD-A	. Master Switch	1			X				
–10A*	TILA64-1C-RD-A	. Master Switch	1			X				
20	TILA64-1C-WH-A	. Alternator Switch	1			X				
–20A*	TIGM54-1C-WH-A	. Alternator Switch	1			X				
30	20TC2-CA-7.5	. Navigation Light Circuit Breaker Switch	1			X				
40	6312-H69A	. Manifold/Fuel Pressure Gauge	1			X				
50	5934-1	. Altimeter (Inches)	1			X				
–50A▲	5934M	. Altimeter (Millibars)	1			X				
60	8000-B160	. Airspeed (MPH)	1			X				
–60A▲	8000-B332	. Airspeed (Knots)	1			X				
70	65-29B	. Tachometer	1			X				
80	ECD071-11	. Instrument Cluster	1			X				
80	22-169-09-1L	. Instrument Cluster (Replaced by ECD071-11)	1			X				
90	ECD071-3	. . Fuel Quantity Gauge	1			X				
90	169E-910-14-4L	. . Fuel Quantity Gauge (Replaced by ECD071-3)	1			X				
100	ECD071-6	. . Engine Oil Pressure Gauge	1			X				
100	169E-914-1L	. . Engine Oil Pressure Gauge (Replaced by ECD071-6)	1			X				
110	ECD071-4	. . MRGB Oil Temperature Gauge	1			X				
110	169E-910-15L	. . MRGB Oil Temperature Gauge (Replaced by ECD071-4)	1			X				
120	ECD071-7	. . Engine Oil Temperature Gauge	1			X				
120	169E-910-11L	. . Engine Oil Temperature Gauge (Replaced by ECD071-7)	1			X				
130	ECD071-5	. . Ammeter	1			X				
130	169E-909-2L	. . Ammeter (Replaced by ECD071-5)	1			X				

UNCONTROLLED COPY WHEN DOWNLOADED OR PRINTED

Visit www.enstromhelicopter.com for instructions to order an original manual and to register for email notification updates.

FIGURE 11-2. F-28C INSTRUMENT PANEL INSTALLATION

ITEM NUMBER	PART NUMBER	DESCRIPTION	QTY PER ASSY	MODELS AFFECTED						
				F-28A	280	F-28C	280C	F-28F	280F	280FX
140	ECD071-8	. . Engine Cylinder Temperature Gauge	1			X				
140	169E-190-12L	. . Engine Cylinder Temperature Gauge (Replaced by ECD071-8)	1			X				
150	20TC2-CA-3	. Panel Light Circuit Breaker Switch	1			X				
160	10-357290-1	. Ignition Switch	1			X				
170	20TC2-CA-15	. Anti-Collision Light Circuit Breaker Switch	1			X				
180	20TC2-CA-7.5	. Boost Pump Circuit Breaker Switch	1			X				
190	20TC2-CA-20	. Landing Light Circuit Breaker Switch	1			X				
200	MP-160-012-70	. Alternator Circuit Breaker 70 Amp	1			X				
–*	507-507-101	. Alternator Exciter Circuit Breaker	1			X				
210	507-507-101	. Trim Motor Circuit Breaker 7.5 Amp	1			X				
220	1500-052-1	. Instrument Circuit Breaker 1 Amp	1			X				
230	507-507-101	. Ignition Circuit Breaker 7.5 Amp	1			X				
240	28-18043	. Placard – Fuel Boot	1			X				
–	41EN-G5-2312	. Pressure Warning Indicator Light (Green)	1			X				
–	41EN-G3-2311	. Pressure Warning Indicator Light (Red)	1			X				
250	28-18051-3	. Switch Panel	1			X				
260	28-18049	. Instrument Panel	1			X				
270	28-18036--9	. Filler Plate 3.08” Diameter	A/R			X				
280	222	. Kendall Cloth Tape	A/R			X				
–	C-2400L4VW-AB-RG	. Compass, Airpath	1			X				
–	330	. Compass Bulb	1			X				
–	1592-30	. Scott Outside Air Temperature Gauge	1			X				
290	A8970B-1-330	. Instrument Light	7			X				

UNCONTROLLED COPY WHEN DOWNLOADED OR PRINTED

Visit www.enstromhelicopter.com for instructions to order an original manual and to register for email notification updates.

FIGURE 11-2. F-28C INSTRUMENT PANEL INSTALLATION

ITEM NUMBER	PART NUMBER	DESCRIPTION	QTY PER ASSY	MODELS AFFECTED						
				F-28A	280	F-28C	280C	F-28F	280F	280FX
–	330	. Instrument Light Bulb	7			X				
–	22-370-60	. Shunt, 50 Millivolt	1			X				
300	2904-33	. Oil Pressure Switch	1			X				
310	1040	. Ball Bank Indicator	1			X				
320	KN500B1/8	. Knob	1			X				
–	0110	. Rheostat	1			X				
–**	28-18032-1	. Rheostat	1			X				
330	202A-1A	. EGT Gauge	1			X				
–▲	41EN-G3-2311	. Starter Engaged Warning Light	1			X				
–▲	41EN-G3-2311	. Alternator Discharge Light (Red)	1			X				
–▲	41EN-G3-2313	. Low Fuel Warning Light	1			X				

♦ Information contained herein represents components as installed at the time of manufacture.

∞ Prior to F-28C-2.

* F-28C S/N 425 and subsequent.

▲ Optional equipment.

** F-28C S/N 457 and subsequent.

UNCONTROLLED COPY WHEN DOWNLOADED OR PRINTED

Visit www.enstromhelicopter.com for instructions to order an original manual and to register for email notification updates.

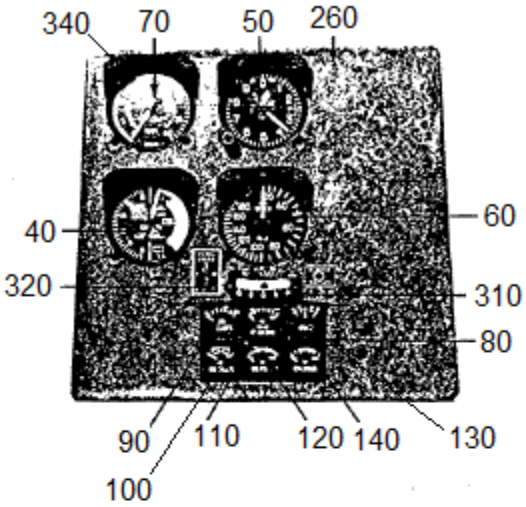

MAIN PANEL - 280

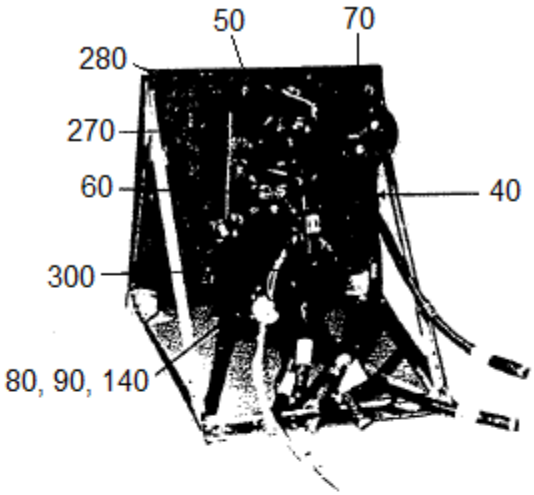

MAIN PANEL - REAR VIEW 280

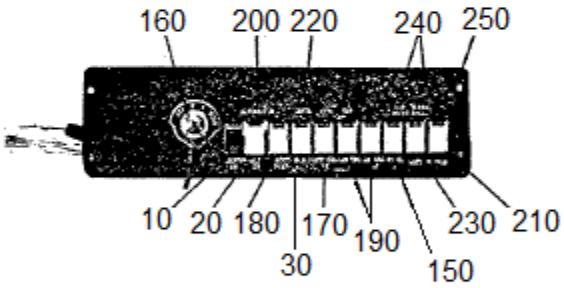

SWITCH PANEL - 280C

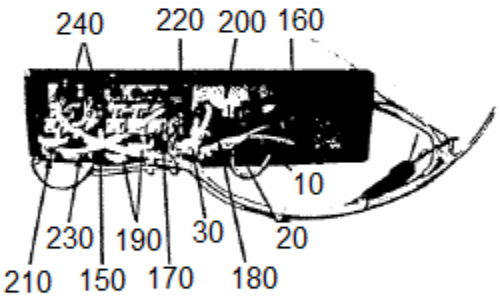

SWITCH PANEL - REAR VIEW 280

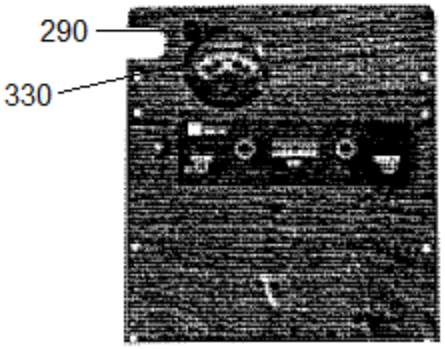

LOWER PANEL - 280

FIGURE 11-3. 280C AND 280F INSTRUMENT PANEL INSTALLATION

UNCONTROLLED COPY WHEN DOWNLOADED OR PRINTED

Visit www.enstromhelicopter.com for instructions to order an original manual and to register for email notification updates.

FIGURE 11-3. 280C AND 280F INSTRUMENT PANEL INSTALLATION

ITEM NUMBER	PART NUMBER	DESCRIPTION	QTY PER ASSY	MODELS AFFECTED						
				F-28A	280	F-28C	280C	F-28F	280F	280FX
–♦	280-180000	Instrument Installation	REF				X		X	
10	TIGM54-1C-RD-A	. Master Switch	1				X		X	
20	TILA64-1C-WH-A	. Alternator Switch	1				X		X	
–20A∞	TIGM54-1C-WH-A	. Alternator Switch	1				X		X	
30	20TC2-CA-7.5	. Navigation Light Circuit Breaker Switch	1				X		X	
40	6312-H69A	. Manifold Pressure/Fuel Flow Indicator	1				X			
50	5934	. Altimeter	1				X		X	
60	8000 CODE B251	. Airspeed Indicator	1				X		X	
70	65-29B	. Tachometer	1				X			
80	ECD071-11	. Instrument Panel	1				X			
80	22-169-09-1L	. Instrument Cluster (Replaced by ECD071-11)	1				X			
90	ECD071-3	. . Fuel Quantity Gauge	1				X			
90	169E-910-14-4L	. . Fuel Quantity Gauge (Replaced by ECD071-3)	1				X			
100	ECD071-6	. . Engine Oil Pressure Gauge	1				X			
100	169E-914-1L	. . Engine Oil Pressure Gauge (Replaced by ECD071-6)	1				X			
110	ECD071-4	. . MRGB Oil Temperature Gauge	1				X			
110	169E-910-15L	. . MRGB Oil Temperature Gauge (Replaced by ECD071-4)	1				X			
120	ECD071-7	. . Engine Oil Temperature Gauge	1				X			
120	169E-910-11L	. . Engine Oil Temperature Gauge (Replaced by ECD071-7)	1				X			
130	ECD071-5	. . Ammeter	1				X			
130	169E-909-2L	. . Ammeter (Replaced by ECD071-5)	1				X			
140	ECD071-8	. . Engine Cylinder Temperature Gauge	1				X			
140	169E-910-12L	. . Engine Cylinder Temperature Gauge (Replaced by ECD071-8)	1				X			

UNCONTROLLED COPY WHEN DOWNLOADED OR PRINTED

Visit www.enstromhelicopter.com for instructions to order an original manual and to register for email notification updates.

FIGURE 11-3. 280C AND 280F INSTRUMENT PANEL INSTALLATION

ITEM NUMBER	PART NUMBER	DESCRIPTION	QTY PER ASSY	MODELS AFFECTED						
				F-28A	280	F-28C	280C	F-28F	280F	280FX
150	20TC2-CA-3	. Panel Light Circuit Breaker Switch	1				X		X	
160	10-357290-1	. Ignition Switch	1				X		X	
170	20TC2-CA-5	. Anti-Collision Light Circuit Breaker Switch	1				X		X	
180	20TC2-CA-7.5	. Boost Pump Circuit Breaker Switch	1				X		X	
190	20TC2-CA-20	. Landing Light Circuit Breaker Switch	1				X		X	
200	MP-160-012-70	. Alternator Circuit Breaker 70 Amp	1				X		X	
–∞	507-507-101	. Alternator Exciter Circuit Breaker	1				X		X	
210	20TC2-CA-7.5	. Trim Motor Circuit Breaker Switch	1				X		X	
220	1500-052-1	. Instrument Circuit Breaker	1				X		X	
230	20TC2-CA-7.5	. Ignition Circuit Breaker Switch	1				X		X	
240	NO NUMBER	. Fuel Pressure Warning System	1				X		X	
–	804-1710-0332-5	. Indicator Light (Green)	1				X		X	
–	803-1710-0331-5	. Indicator Light (Red)	1				X		X	
–	1815	. Bulb	1				X		X	
250	280-180004	. Switch Panel	1				X		X	
260	280-180004-21	. Instrument Panel	1				X		X	
270	28-18036-9	. Filler Plate 3.08” Diameter	A/R				X		X	
280	222	. Kendall Cloth Tape	A/R				X		X	
–	C-2400L4VW-AB-RG	. Compass	1				X		X	
–	1592-30	. Scott Outside Air Temperature Gauge	1				X		X	
290	A8970B-1-330	. Instrument Light	A/R				X		X	
–	330	. Instrument Light Bulb	A/R				X		X	
–	22-370-60	. Shunt, 50 Millivolt	1				X		X	
300	2904-33	. Oil Pressure Switch	1				X		X	
310	1040	. Ball Bank Indicator	1				X		X	

UNCONTROLLED COPY WHEN DOWNLOADED OR PRINTED

Visit www.enstromhelicopter.com for instructions to order an original manual and to register for email notification updates.

FIGURE 11-3. 280C AND 280F INSTRUMENT PANEL INSTALLATION

ITEM NUMBER	PART NUMBER	DESCRIPTION	QTY PER ASSY	MODELS AFFECTED						
				F-28A	280	F-28C	280C	F-28F	280F	280FX
320	KN500B1/8	. Knob	1				X		X	
–	0110	. Rheostat	1				X		X	
–†	28-18082-1	. Rheostat	1				X		X	
330	202A-13BTR	. EGT Gauge	1				X		X	
340	B-4855B-330	. Instrument Light	A/R				X		X	
–*	41EN-G3-2311	. Starter Engaged Warning Light (Red)	1				X		X	
–*	41EN-G3-2311	. Alternator Discharge Light (Red)	1				X		X	
–*	41EN-G3-2313	. Low Fuel Light	1				X		X	
–*	ECD077-11	. Manifold/Fuel Pressure	1				X		X	
–*	ECD078-11	. Pressure Switch	1						X	
–*▲	ECD079-11	. Pressure Switch	1				X			
–*	ECD072-11	. Tachometer	1						X	
–*	ECD071-11	. Instrument Cluster	1						X	
–*	ECD071-3	. . Fuel Quantity Gauge	1						X	
–*	169E-910-14-5L	. . Fuel Quantity Gauge (Replaced by ECD071-3)	1						X	
–*	ECD071-6	. . Engine Oil Pressure Gauge	1						X	
–*	169E-914-2L	. . Engine Oil Pressure Gauge (Replaced by ECD071-6)	1						X	
–*	ECD071-4	. . MRGB Oil Temperature Gauge	1						X	
–*	169E-910-15-1L	. . MRGB Oil Temperature Gauge (Replaced by ECD071-4)	1						X	
–*	ECD071-7	. . Engine Oil Temperature Gauge	1						X	
–*	169E-910-11-3L	. . Engine Oil Temperature Gauge (Replaced by ECD071-7)	1						X	
–*	ECD071-5	. . Ammeter	1						X	
–*	169E-909-3L	. . Ammeter (Replaced by ECD071-5)	1						X	
–*	ECD071-8	. . Engine Cylinder Temperature Gauge	1						X	

UNCONTROLLED COPY WHEN DOWNLOADED OR PRINTED

Visit www.enstromhelicopter.com for instructions to order an original manual and to register for email notification updates.

FIGURE 11-3. 280C AND 280F INSTRUMENT PANEL INSTALLATION

ITEM NUMBER	PART NUMBER	DESCRIPTION	QTY PER ASSY	MODELS AFFECTED						
				F-28A	280	F-28C	280C	F-28F	280F	280FX
–*	169E-910-12-1L	. . Engine Cylinder Temperature Gauge (Replaced by ECD071-8)	1						X	

♦ Information contained herein represents components as installed at the time of manufacture.

∞ 280C and 280F S/N 1149 and subsequent.

† 280C and 280F S/N 1161 and subsequent.

* Optional equipment.

▲ Without pop off valve.

UNCONTROLLED COPY WHEN DOWNLOADED OR PRINTED

Visit www.enstromhelicopter.com for instructions to order an original manual and to register for email notification updates.

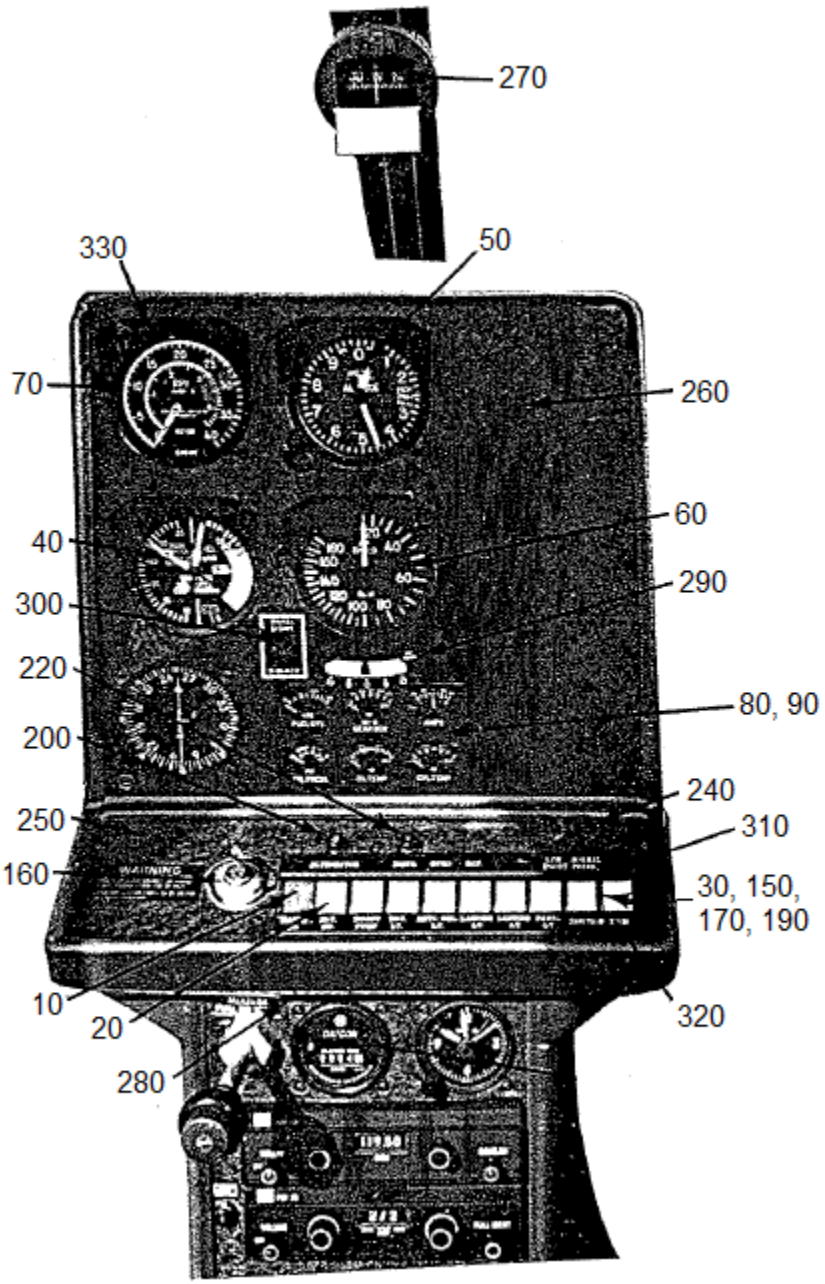

FIGURE 11-4. 280 INSTRUMENT PANEL INSTALLATION

UNCONTROLLED COPY WHEN DOWNLOADED OR PRINTED

Visit www.enstromhelicopter.com for instructions to order an original manual and to register for email notification updates.

FIGURE 11-4. 280 INSTRUMENT PANEL INSTALLATION

ITEM NUMBER	PART NUMBER	DESCRIPTION	QTY PER ASSY	MODELS AFFECTED						
				F-28A	280	F-28C	280C	F-28F	280F	280FX
–*	280-180000	Instrument Installation	REF		X					
10	8134K21A1T50	. Master Switch	1		X					
20	8134K21A1M50	. Alternator Switch	1		X					
30	20TC2-CA-7.5	. Navigation Light Circuit Breaker Switch	1		X					
40	U16082-H61	. Manifold Pressure Gauge	1		X					
–40A	6312-H69	. Manifold Pressure Gauge	1				X			
50	5934	. Altimeter	1		X					
60	8000T	. Airspeed Indicator	1		X					
–60A	8000-B251	. Airspeed Indicator	1				X			
70	65-29AP	. Tachometer	1		X					
–70A	65-29B	. Tachometer	1				X			
80	ECD071-11	. Instrument Cluster	1		X					
80	22-169-09-1L	. Engine Instrument Cluster (Replaced by ECD071-11)	1		X					
90	ECD071-3	. . Fuel Quantity Gauge	1		X					
90	169E-910-14-4L	. . Fuel Quantity Gauge (Replaced by ECD071-3)	1		X					
100	ECD071-6	. . Engine Oil Pressure Gauge	1		X					
100	169E-914-1L	. . Engine Oil Pressure Gauge (Replaced by ECD071-6)	1		X					
110	ECD071-4	. . MRGB Oil Temperature Gauge	1		X					
110	169E-910-15L	. . MRGB Oil Temperature Gauge (Replaced by ECD071-4)	1		X					
120	ECD071-7	. . Engine Oil Temperature Gauge	1		X					
120	169E-910-11L	. . Engine Oil Temperature Gauge (Replaced by ECD071-7)	1		X					
130	ECD071-5	. . Ammeter	1		X					
130	169E-909-2L	. . Ammeter (Replaced by ECD071-5)	1		X					
140	ECD071-8	. . Engine Cylinder Temperature Gauge	1		X					

UNCONTROLLED COPY WHEN DOWNLOADED OR PRINTED

Visit www.enstromhelicopter.com for instructions to order an original manual and to register for email notification updates.

FIGURE 11-4. 280 INSTRUMENT PANEL INSTALLATION

ITEM NUMBER	PART NUMBER	DESCRIPTION	QTY PER ASSY	MODELS AFFECTED						
				F-28A	280	F-28C	280C	F-28F	280F	280FX
140	169E-910-12L	. . Engine Cylinder Temperature Gauge (Replaced by ECD071-8)	1		X					
150	20TC2-CA-3	. Panel Light Circuit Breaker	1		X					
160	20TC2-CA-7.5	. Ignition Switch	1		X					
170	20TC2-CA-5	. Anti-Collision Light Circuit Breaker Switch	1		X					
180	20TC2-CA-7.5	. Boost Pump Circuit Breaker Switch	1		X					
190	20TC2-CA-20	. Landing Light Circuit Breaker Switch	1		X					
200	MP-160-012-70	. Alternator Circuit Breaker 70 Amp	1		X					
210	20TC2-CA-7.5	. Trim Motor Circuit Breaker	1		X					
220	1500-052-1	. Instrument Breaker	1		X					
230	20TC2-CA-7.5	. Ignition Circuit Breaker	1		X					
240	804-1710-0332-504	. Fuel Pressure Warning System Indicator Light (Green)	1		X					
–	803-1710-0331-504	. Indicator Light (Red)	1		X					
250	280-180004-19	. Switch Panel	1		X					
260	280-180004-21	. Instrument Panel	1		X					
–	28-18036-10	. Filler Plate	1		X					
–	222	. Kendall Polyken Cloth Tape	A/R		X					
270	C-2400L4VW-AB-RG	. Airpath Compass	1		X					
–	330	. Compass Bulb	A/R		X					
–	1592-30	. Scott Outside Air Temperature Gauge	1		X					
280	A8970B-1-330	. Instrument Light	1		X					
–	330	. Instrument Bulb	A/R		X					
–	22-370-60	. Shunt, 50 Millivolt	1		X					
–	2904-33F5	. Pressure Switch	1		X					
290	1040	. Ball Bank Indicator	1		X					

Visit www.enstromhelicopter.com for instructions to order an original manual and to register for email notification updates.

FIGURE 11-4. 280 INSTRUMENT PANEL INSTALLATION

ITEM NUMBER	PART NUMBER	DESCRIPTION	QTY PER ASSY	MODELS AFFECTED						
				F-28A	280	F-28C	280C	F-28F	280F	280FX
300	0110	. Rheostat	1		X					
–	KN500B1/8	. Knob	1		X					
–	35-140-A	. EGT Gauge	1		X					
–	202A-1ATR	. EGT Gauge	1		X					
310	280-180005-2	. Panel Light (Upper)	1		X					
320	280-180005-1	. Panel Light (Lower)	1		X					
330	B-4855B-330	. Eyebrow Light	A/R		X					

* Information contained herein represents components as installed at the time of manufacture.

UNCONTROLLED COPY WHEN DOWNLOADED OR PRINTED

Visit www.enstromhelicopter.com for instructions to order an original manual and to register for email notification updates.

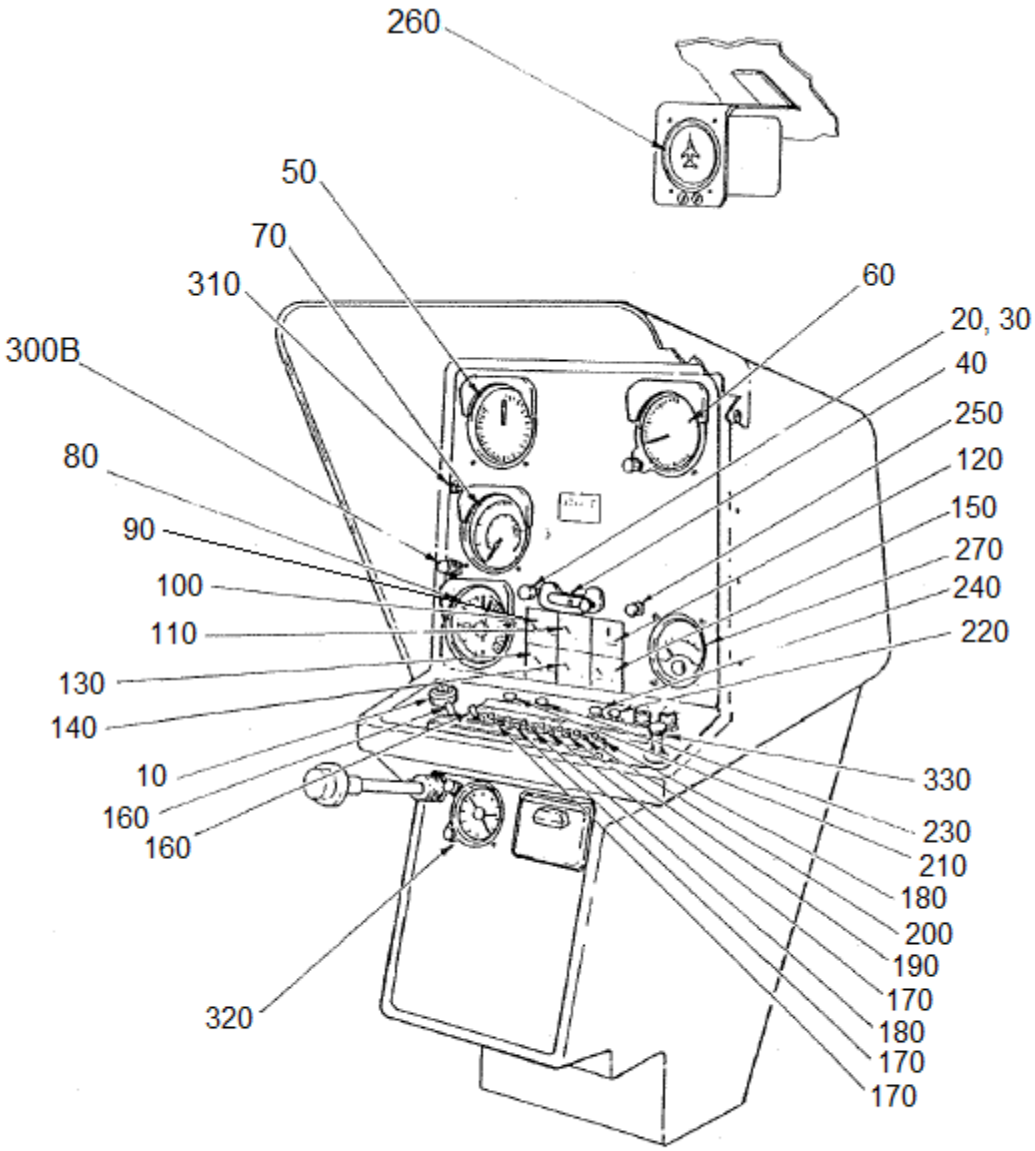

F-28F INSTRUMENT PANEL INSTALLATION (12V)

Sheet 1 of 2

FIGURE 11-5. F-28F AND 280FX INSTRUMENT PANEL INSTALLATION (12V)

UNCONTROLLED COPY WHEN DOWNLOADED OR PRINTED

Visit www.enstromhelicopter.com for instructions to order an original manual and to register for email notification updates.

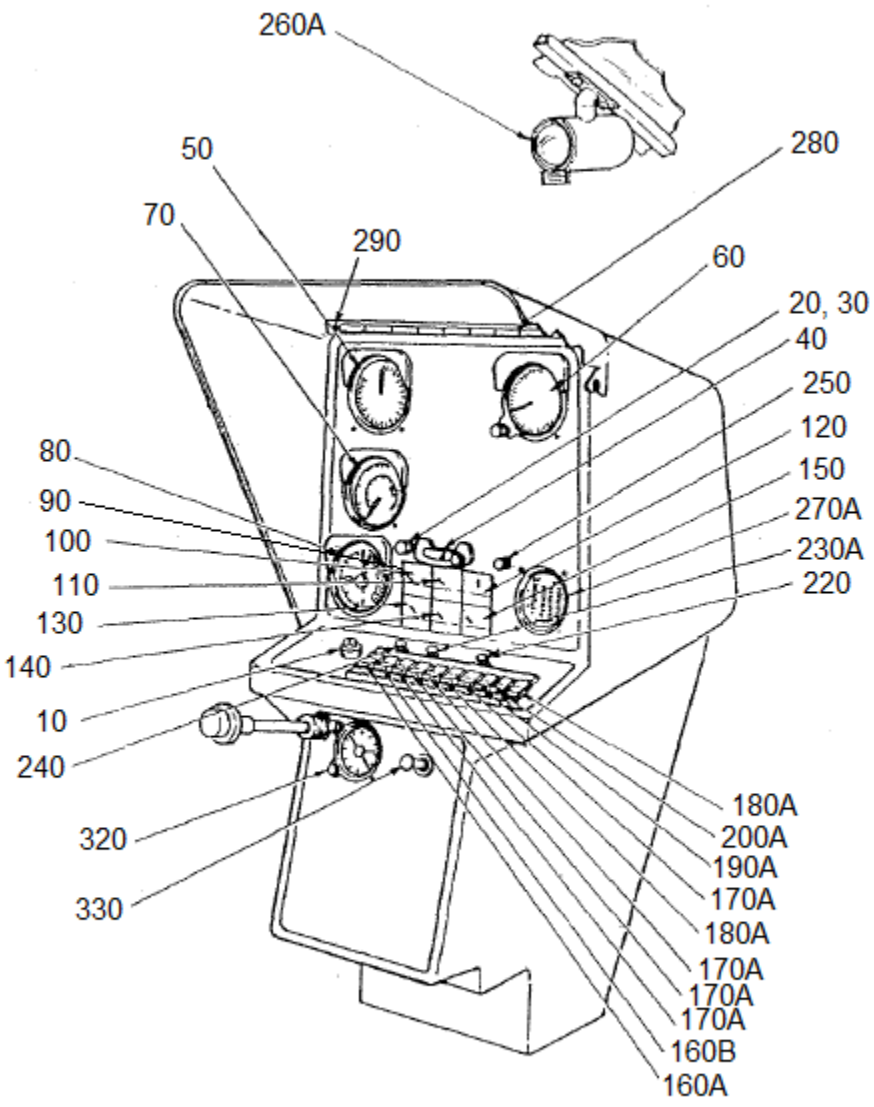

280FX INSTRUMENT PANEL INSTALLATION (12V)

Sheet 2 of 2

FIGURE 11-5. F-28F AND 280FX INSTRUMENT PANEL INSTALLATION (12V)

UNCONTROLLED COPY WHEN DOWNLOADED OR PRINTED

Visit www.enstromhelicopter.com for instructions to order an original manual and to register for email notification updates.

FIGURE 11-5. F-28F AND 280FX INSTRUMENT PANEL INSTALLATION (12V)

ITEM NUMBER	PART NUMBER	DESCRIPTION	QTY PER ASSY	MODELS AFFECTED						
				F-28A	280	F-28C	280C	F-28F	280F	280FX
–	28-18099-101	Instrument Panel 280FX Wide 12V	REF						X	X
–	28-18099-111	Instrument Panel F28F Wide 12V	REF					X		
–	28-18099-119	Instrument Panel F28F Narrow 12V	REF					X		
–	28-18099-125	Instrument Panel 280FX Narrow 12V	REF						X	X
10	10-357290-1	. Ignition Switch	1					X	X	X
20	28-18082-9	. Panel Dimmer Control	1					X	X	X
30	KN500B1/8	. Knob	1					X	X	X
40	1040	. Ball Bank Indicator	1					X	X	X
–	MS35214-30	. Screw	1					X	X	X
–	AN515B-6-R14	. Screw (Superseded by MS35214-30)	1					X	X	X
–	NAS1149FN616P	. Washer (Alternate)	1					X	X	X
–	AN960-6L	. Washer	1					X	X	X
–	MS35338-41	. Washer (Alternate)	1					X	X	X
–	AN935-6	. Lock Washer	1					X	X	X
–	MS35649-262	. Nut	1					X	X	X
–	AN340-632	. Nut (Superseded by MS35649-262)	1					X	X	X
–▼	A8970B-1-330	. Post Light (Clear)	1					X	X	X
–	28-19031	Electrical Final Assembly	REF					X	X	X
–	28-22344-5	. Hour Meter Installation	1					X	X	X
–	T14BH517BC	. . Hour Meter 8-32V	1					X	X	X
–	773-4/50 VDC	. . Hour Meter (Superseded by T14BH517BC)	1					X		
–	773-8/50 VDC	. . Hour Meter (Superseded by T14BH517BC)	1						X	X
–	2716-00	. Outside Air Temp.	1					X	X	X
–	1592-30	. Outside Air Temp. (Superseded by 2716-00)	1					X	X	X
50	8000-B.852	. Airspeed Indicator (Narrow)	1					X		

UNCONTROLLED COPY WHEN DOWNLOADED OR PRINTED

Visit www.enstromhelicopter.com for instructions to order an original manual and to register for email notification updates.

FIGURE 11-5. F-28F AND 280FX INSTRUMENT PANEL INSTALLATION (12V)

ITEM NUMBER	PART NUMBER	DESCRIPTION	QTY PER ASSY	MODELS AFFECTED						
				F-28A	280	F-28C	280C	F-28F	280F	280FX
50	8000 B.786	. Airspeed Indicator (Narrow) (Alternate to 8000-B.852)	1					X		
50	8000-B160	. Airspeed Indicator (Superseded by 8000-B.852)	1					X		
50A	8000-B.853	. Airspeed Indicator (Narrow)	1						X	X
50B	8000-B251	. Airspeed Indicator (Superseded by 8000-B.852 and 8000-B.853)	1					X	X	X
60	5934PD-3-A.253	. Altimeter	1					X	X	X
60	UI-5934-1	. Altimeter (Superseded by 5934PD-3-A.253)	1					X	X	X
70	ECD072-11	. Tachometer	1					X	X	X
80	ECD077-11	. Manifold Pressure	1					X	X	X
90	ECD071-11	. Instrument Cluster (Lighted)	1					X	X	X
100	ECD071-3	. . Fuel Quantity Gauge	1					X	X	X
110	ECD071-4	. . Oil Temp MRGB Gauge	1					X	X	X
120	ECD071-5	. . Ammeter Gauge	1					X	X	X
130	ECD071-6	. . Engine Oil Pressure Gauge	1					X	X	X
140	ECD071-7	. . Engine Oil Temperature Gauge	1					X	X	X
150	ECD071-8	. . Cylinder Temperature Gauge	1					X	X	X
–	B-4855B-330	. Eyebrow Light	4					X	X	X
–	330	. Bulb	A/R					X	X	X
–▼Δ	803-1710-0331-504	. Indicator Light (Red)	A/R					X	X	
–◊	804-1710-0332-504	. Indicator Light (Green)	A/R					X	X	
–	1815	. Bulb	A/R					X	X	X
160	12TS15-2	. Toggle Switch	2					X		
160	12T35-2	. Master Switch (Toggle) (Superseded by 12TS15-2)	1					X		
160A	TIGK54-1S-RD-A	. Master Switch (Rocker)	1						X	X
160B	TIGK54-1S-WH-A	. Alternator Switch (Rocker)	1						X	X
170	7270-1-7 1/2	. Circuit Breaker Switch (7.5A)	3					X		
170A	20TC2-CA-7.5	. Circuit Breaker (7.5A)	4						X	

UNCONTROLLED COPY WHEN DOWNLOADED OR PRINTED

Visit www.enstromhelicopter.com for instructions to order an original manual and to register for email notification updates.

FIGURE 11-5. F-28F AND 280FX INSTRUMENT PANEL INSTALLATION (12V)

ITEM NUMBER	PART NUMBER	DESCRIPTION	QTY PER ASSY	MODELS AFFECTED						
				F-28A	280	F-28C	280C	F-28F	280F	280FX
180	7270-1-5	. Circuit Breaker (5A)	2					X		
180A	20TC2-CA-5	. Circuit Breaker (5A)	2						X	X
190	7270-1-3	. Circuit Breaker (3A)	1					X		
190A	20TC2-CA-3	. Circuit Breaker (3A)	1						X	X
200	7270-1-20	. Circuit Breaker (20A)	1					X		
200A	20TC2-CA-20	. Circuit Breaker (20A)	1						X	X
210	MP-160-012-70	. Circuit Breaker Switch (70A)	1					X	X	X
220	MS26574-7 1/2	. Circuit Breaker (12V)	1					X	X	X
220	507-507-101 (7.5A)	. Circuit Breaker (Alt. Exciter) (Superseded by MS26574-7 1/2)	1					X	X	X
230	MS26574-2 1/2	. Circuit Breaker (2 1/2A)	1					X	X	
230	1500-052-205	. Circuit Breaker (2.5A) (Superseded by MS26574-2 1/2)	1					X	X	
230A	1500-052-1	. Circuit Breaker (1A)	1							X
240	MS26574-20	. Circuit Breaker (20A)	1					X	X	X
240	700-001-20	. Circuit Breaker (20A) (Superseded by MS26574-20)	1					X	X	X
250*	1500-052-2	. Circuit Breaker (Alternate)	1					X	X	X
250	3MC1-3-2	. Buss Fault Circuit Breaker	1					X	X	X
–	28-18084-5	Magnetic Compass Instl.	REF					X		
260	PAI-700	. Compass	1					X		
260	H1-400-14	. Compass (Obsolete)	1					X		
–	28-19032	Magnetic Compass Instl.	REF						X	X
260A	C2400L4VWAB-RG	. Compass	1						X	X
–▲	28-18091-1	. ID Panel Assembly (Lower)	1					X		
–▲♦	28-18091-103	. ID Panel Assembly (Lower)	1					X		
–▲	28-18091-107	. ID Panel Assembly (Lower)	1					X		
–	28-18091-133	. ID Panel Assembly (Lower)	1					X		
–	28-18069-21	. Illuminated Panel (Lower) (Narrow)	1					X	X	X
–▲	28-18091-5	. ID Panel Assembly (Lower)	1						X	X

UNCONTROLLED COPY WHEN DOWNLOADED OR PRINTED

Visit www.enstromhelicopter.com for instructions to order an original manual and to register for email notification updates.

FIGURE 11-5. F-28F AND 280FX INSTRUMENT PANEL INSTALLATION (12V)

ITEM NUMBER	PART NUMBER	DESCRIPTION	QTY PER ASSY	MODELS AFFECTED						
				F-28A	280	F-28C	280C	F-28F	280F	280FX
–▲	28-18091-3	. ID Panel Assembly (Upper)	1					X		
–▲♦	28-18091-101	. ID Panel Assembly (Upper)	1					X		
–▲	28-18091-105	. ID Panel Assembly (Upper)	1					X		
–▲	28-18091-109	. ID Panel Assembly (Upper)	1					X		
–▲	28-18091-111	. ID Panel Assembly (Upper)	1							X
–▲	28-18091-113	. ID Panel Assembly (Upper)	1						X	
–	28-18091-131	. ID Panel Assembly (Upper)	1					X		
–	28-18069-19	. Illuminated Panel (Upper) (Narrow)	1					X	X	X
–	22-370-60	. Shunt (50 M.V.)	1					X	X	X
–	2335-265-1	. Oil Pressure Switch	1					X	X	X
–	2904-33	. Oil Pressure Switch (Replaced by 2335-265-1)	1					X	X	X
–	ECD078-11	. Pressure Switch (Overboost)	1					X	X	X
–	28-18036-9	. Filler Plate	A/R					X	X	X
–	28-18036-10	. Filler Plate	A/R					X	X	X
–	222	. Cloth Tape	A/R					X	X	X
270∞	202A-13BTR	. E.G.T.	1					X	X	X
270A∞	28-01026-3	. Graphic Engine Monitor (603)	1					X	X	X
270B†	28-01026-1	. Graphic Engine Monitor (602)	1					X	X	X
280	28-19045-1	. Annunciator Panel	1							X
280A	28-19045-3	. Annunciator Panel	1							X
280B	28-19045-5	. Annunciator Panel	1							X
280C	28-19045-7	. Annunciator Panel	1					X		
280D	28-19045-9	. Annunciator Panel	1							X
290	30-1UL	. . Test Switch	1					X		X
300	28-18095-1	. Overboost Installation	1					X		X
300A	28-18095-3	. Overboost Installation	1					X		X
300B	28-18095-6	. Overboost Installation	1					X	X	X
310	MS25331-8	. . Light Assembly (Used with 28-18095-1 and 28-18095-3)	1					X	X	X

UNCONTROLLED COPY WHEN DOWNLOADED OR PRINTED

Visit www.enstromhelicopter.com for instructions to order an original manual and to register for email notification updates.

FIGURE 11-5. F-28F AND 280FX INSTRUMENT PANEL INSTALLATION (12V)

ITEM NUMBER	PART NUMBER	DESCRIPTION	QTY PER ASSY	MODELS AFFECTED						
				F-28A	280	F-28C	280C	F-28F	280F	280FX
320†	W33-7516-10ET-1	. Clock – 8 Day	1					X	X	X
330†	L-141C	. Cigarette Lighter	1					X	X	X
–†	41EN-G3-2311	. Indicator Light (Red)	2					X	X	X
–†	41EN-G3-2313	. Indicator Light (Amber)	1	X	X	X	X	X	X	X

▼ Preferred replacement part.

∆ Not used on F-28F with annunciator panel.

◊ Not used on new F-28F and 280F models.

* Use 1500-052-2 circuit breaker as an acceptable alternate from F-28F S/N 509 to S/N 814 and 280FX S/N 2001 to S/N 2091.

♦ Right hand pilot controls only.

▲ Customer Service use only.

∞ E.G.T. or Graphic Engine Monitor to be installed per customer order.

† Customer option.

UNCONTROLLED COPY WHEN DOWNLOADED OR PRINTED

Visit www.enstromhelicopter.com for instructions to order an original manual and to register for email notification updates.

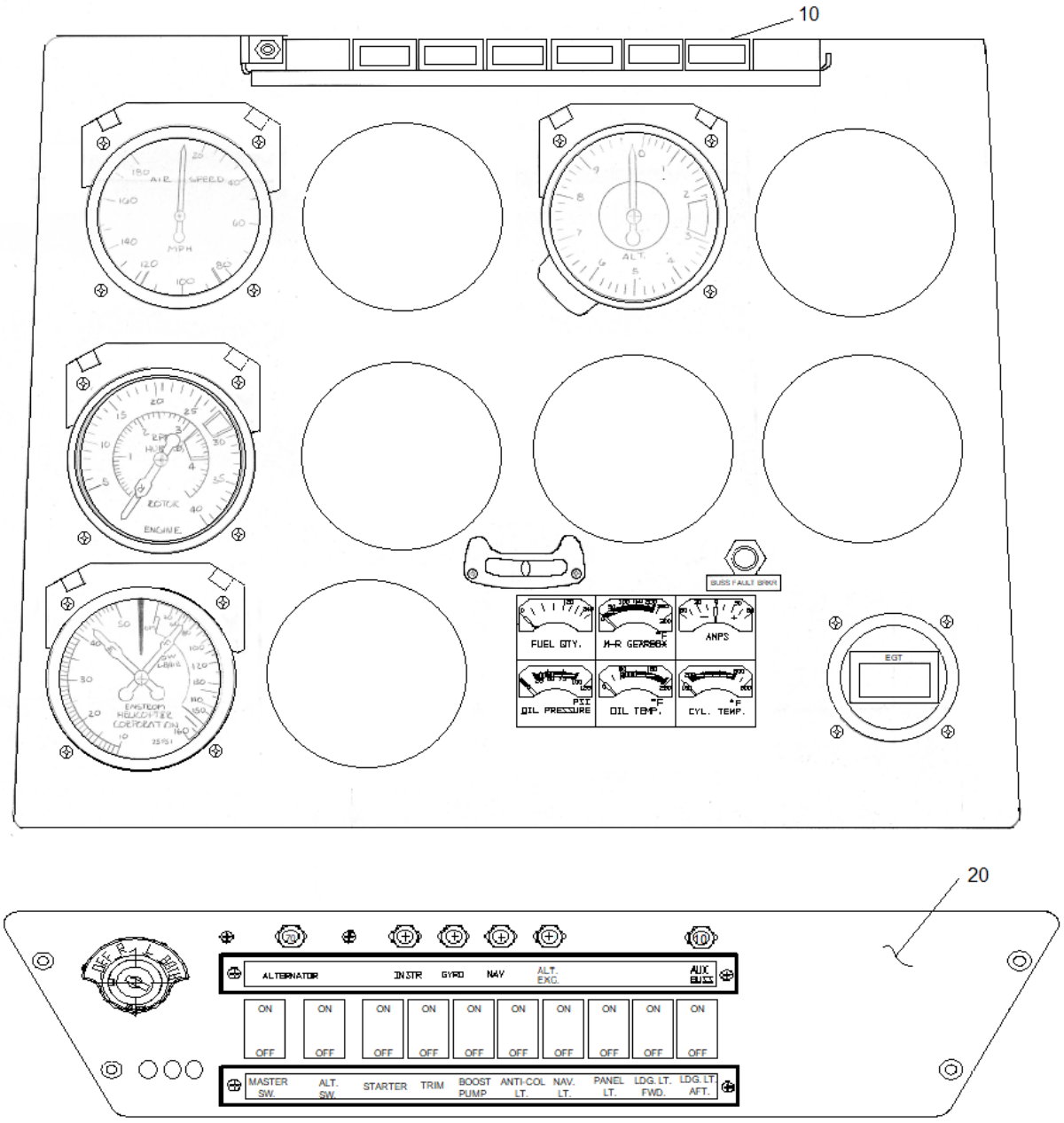

WIDE PANEL CONFIGURATION

Sheet 1 of 2

FIGURE 11-6. F-28F AND 280FX INSTRUMENT PANEL INSTALLATION (24V)

UNCONTROLLED COPY WHEN DOWNLOADED OR PRINTED

Visit www.enstromhelicopter.com for instructions to order an original manual and to register for email notification updates.

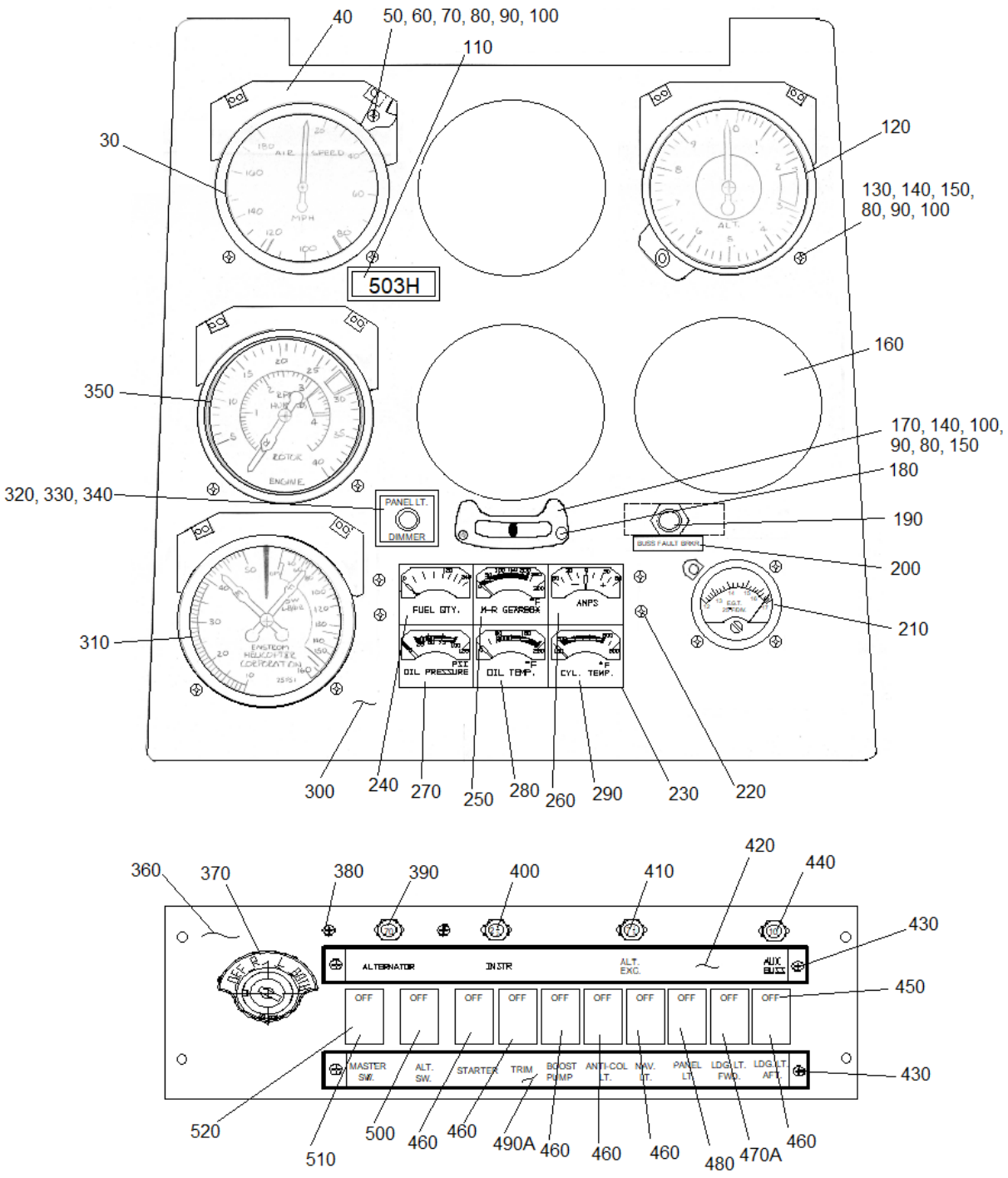

NARROW PANEL CONFIGURATION

Sheet 2 of 2

FIGURE 11-6. F-28F AND 280FX INSTRUMENT PANEL INSTALLATION (24V)

UNCONTROLLED COPY WHEN DOWNLOADED OR PRINTED

Visit www.enstromhelicopter.com for instructions to order an original manual and to register for email notification updates.

FIGURE 11-6. F-28F AND 280FX INSTRUMENT PANEL INSTALLATION (24V)

ITEM NUMBER	PART NUMBER	DESCRIPTION	QTY PER ASSY	MODELS AFFECTED						
				F-28A	280	F-28C	280C	F-28F	280F	280FX
–	28-18099-3	Instrument Installation 24V (Wide)	REF					X		X
–	28-18099-7	Instrument Installation 24V (Narrow)	REF					X		X
10	28-19041	. Annunciator System	1					X		X
20	28-18156-1	. Switch Panel F-28F (Wide)	1					X		
–20A	28-18156-3	. Switch Panel 280FX (Wide)	1							X
30	8000-B251	. Airspeed Indicator	1					X		X
40	B-4855B-330	. Grimes Lt.	4					X		X
50	MS35214-29	. Screw	4					X		X
50	AN515B-6-R12	. Screw (Superseded by MS35214-29)	4					X		X
60	MS35214-31	. Screw	4					X		X
60	AN515B-6-R16	. Screw (Superseded by MS35214-31)	4					X		X
70	A8943-632-493	. Nut	6					X		X
80	MS35649-262	. Nut	5					X		X
80	AN340-632	. Nut (Superseded by MS35649-262)	5					X		X
90	MS35338-41	. Washer (Alternate)	5					X		X
90	AN935-6	. Lock Washer	5					X		X
100	NAS1149FN616P	. Washer (Alternate)	5					X		X
100	AN960-6L	. Washer	5					X		X
110	28-180020-11	. Registration I.D. Panel	1					X		X
120	UI5934-3	. Altimeter	1					X		X
130	MS35214-109	. Screw	4					X		X
130	AN515B-6-R18	. Screw (Superseded by MS35214-109)	4					X		X
140	MS35214-30	. Screw	3					X		X
140	AN515B-6-R14	. Screw (Superseded by MS35214-30)	3					X		X
150	A8944-632-493	. Nut	2					X		X
160	280-180004-25	. Plug	3					X		X

UNCONTROLLED COPY WHEN DOWNLOADED OR PRINTED

Visit www.enstromhelicopter.com for instructions to order an original manual and to register for email notification updates.

FIGURE 11-6. F-28F AND 280FX INSTRUMENT PANEL INSTALLATION (24V)

ITEM NUMBER	PART NUMBER	DESCRIPTION	QTY PER ASSY	MODELS AFFECTED						
				F-28A	280	F-28C	280C	F-28F	280F	280FX
170	1040	. Ball Bank Indicator	1					X		X
180	A8970B-1-330	. Post Lt.	1					X		X
*190	1500-052-2	. Circuit Breaker (Alternate)	1					X		X
190	3MC1-3-2	. Circuit Breaker	1					X		X
200	28-18081-11	. Placard	1					X		X
210	28-181005-1	. Turbine Inlet Installation	1					X		X
220	MS35214-25	. Screw	4					X		X
220	AN515B-6-R6	. Screw (Superseded by MS35214-25)	4					X		X
230	ECD071-15	. Instrument Panel	1					X		X
230	ECD071-11	. Instrument Cluster (Superseded by ECD071-15)	1					X		X
240	ECD071-103	. . Fuel Qty. Gauge	1					X		X
250	ECD071-104	. . Oil Temp. MRGB Gauge	1					X		X
260	ECD071-105	. . Ammeter Gauge	1					X		X
270	ECD071-106	. . Eng. Oil Press. Gauge	1					X		X
280	ECD071-107	. . Eng. Oil Temp. Gauge	1					X		X
290	ECD071-108	. . Cylinder Temp. Gauge	1					X		X
300	280-180003-3	. Chassis Assembly	1					X		X
310	ECD077-11	. Man./Fuel Pressure Gauge	1					X		X
320	28-18082-9	. Panel Dimmer Control	1					X		X
330	28-22501-11	. Placard	1					X		X
340	KN500B1/8	. Knob	1					X		X
350	ECD072-11	. Tachometer	1					X		X
360	28-180004-5	. Panel Assembly	1					X		X
370	10-357290-1	. Ignition Switch	1					X		X
380	MS35214-26	. Screw	2					X		X
380	AN515B-6-R7	. Screw (Superseded by MS35214-26)	2					X		X
390	MP-160-012-70	. Circuit Breaker (70A)	1					X		X
–390A	MP-160-012-100	. Circuit Breaker (100A) (Narrow)	1					X		X

UNCONTROLLED COPY WHEN DOWNLOADED OR PRINTED

Visit www.enstromhelicopter.com for instructions to order an original manual and to register for email notification updates.

FIGURE 11-6. F-28F AND 280FX INSTRUMENT PANEL INSTALLATION (24V)

ITEM NUMBER	PART NUMBER	DESCRIPTION	QTY PER ASSY	MODELS AFFECTED						
				F-28A	280	F-28C	280C	F-28F	280F	280FX
400	1500-052-205	. Circuit Breaker	1					X		X
410	MS25244-5	. Circuit Breaker	1					X		X
410	1500-056-3	. Circuit Breaker (3A) (Superseded by MS25244-5)	1					X		X
420	28-18091-123	. Upper I.D. Panel Assembly	1							X
430	MS24693-BB26	. Screw	20					X		X
430	AN507-B-632-R6	. Screw (Superseded by MS24693-BB26)	20					X		X
440	700-001-10	. Circuit Breaker	1					X		X
450	28-18052-1	. Placard	10					X		X
460	20TC2-CA-5	. Circuit Breaker Switch (5A)	1					X		X
–460A	20TC2-CA-7.5	. Circuit Breaker Switch (7.5A)	6					X		X
470	20TC2-CA-20	. Circuit Breaker Switch (20A)	1					X		X
–470A	20TC2-CA-10	. Circuit Breaker Switch (10A) (Narrow)	1					X		X
480	20TC2-CA-3	. Circuit Breaker Switch (3A)	1					X		X
490	28-18091-5	. Lower I.D. Panel Assembly	1					X		X
–490A	28-18091-121	. Lower I.D. Panel Assembly (Narrow)	1					X		X
500	TIGK54-15-WH-A	. Switch	1					X		X
510	TIGK54-15-RD-A	. Switch	1					X		X
520	28-18053-1	. Placard	10					X		X

* Use 1500-052-2 circuit breaker as an acceptable alternate from F-28F S/N 509 to S/N 814 and 280FX S/N 2001 to S/N 2091.

UNCONTROLLED COPY WHEN DOWNLOADED OR PRINTED

Visit www.enstromhelicopter.com for instructions to order an original manual and to register for email notification updates.

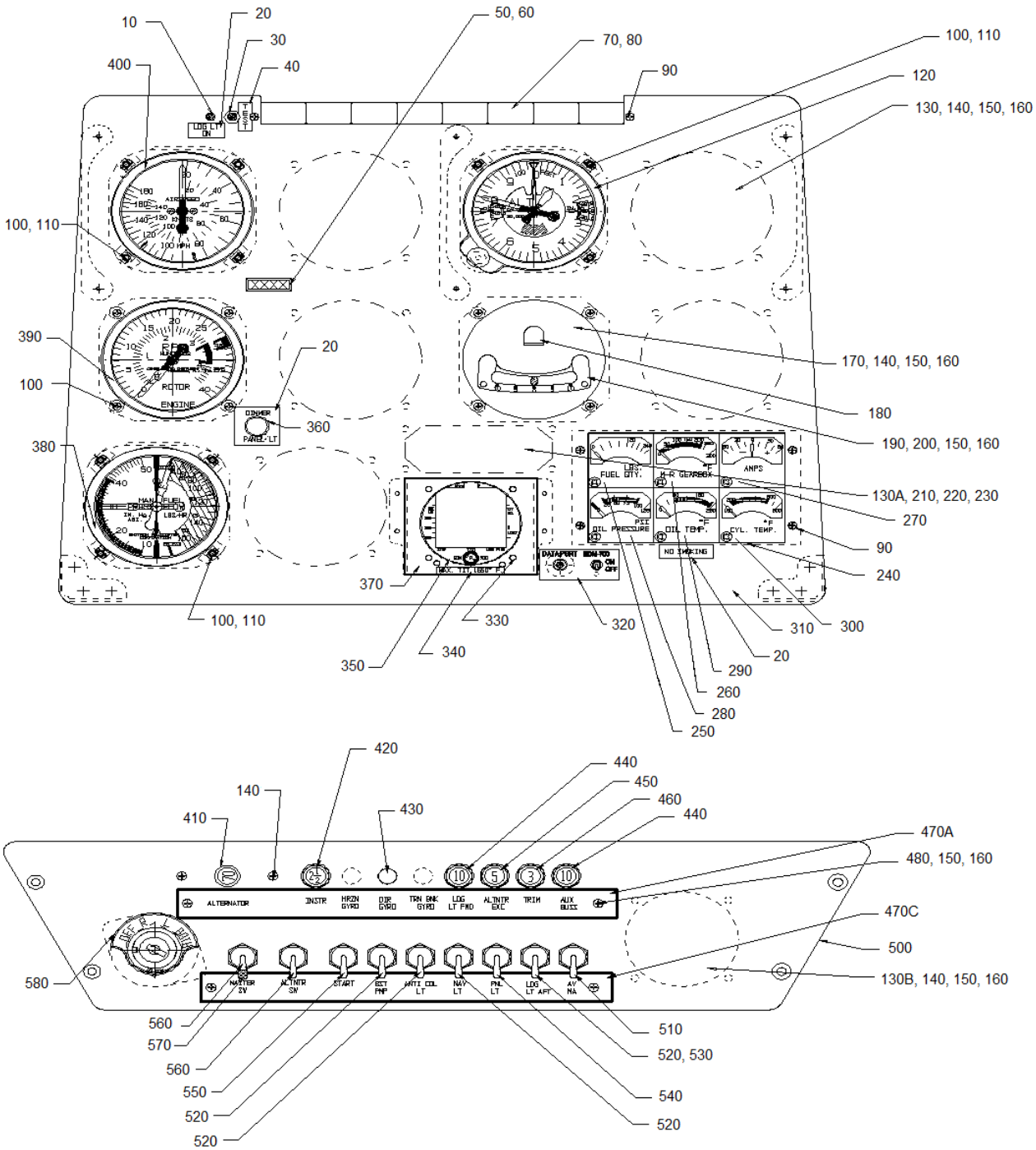

F-28F: S/N 833 AND SUBSEQUENT

Sheet 1 of 4

FIGURE 11-7. F-28F INSTRUMENT PANEL INSTALLATION (24V)

UNCONTROLLED COPY WHEN DOWNLOADED OR PRINTED

Visit www.enstromhelicopter.com for instructions to order an original manual and to register for email notification updates.

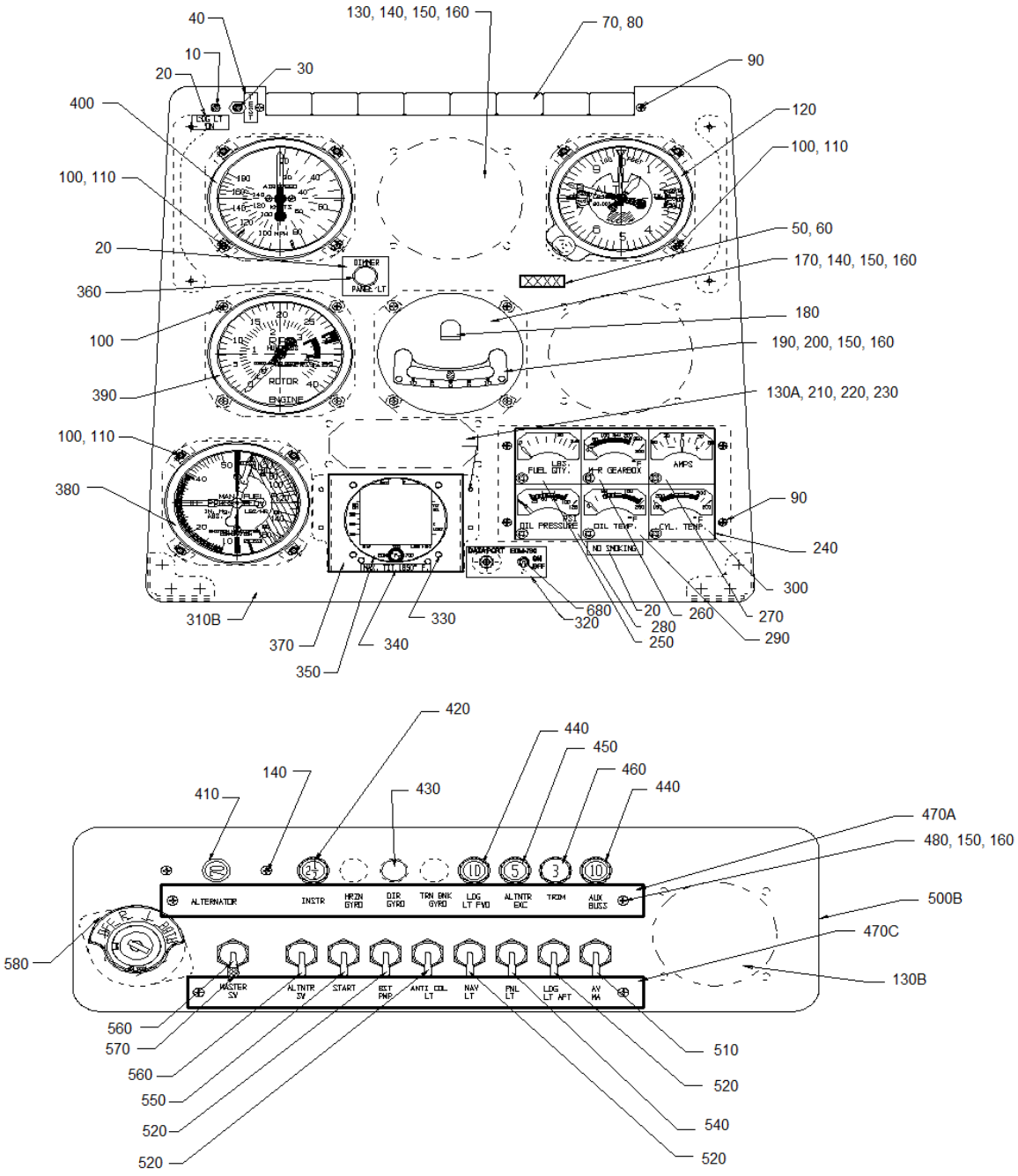

F-28F: S/N 833 AND SUBSEQUENT

Sheet 2 of 4

FIGURE 11-7. F-28F INSTRUMENT PANEL INSTALLATION (24V)

UNCONTROLLED COPY WHEN DOWNLOADED OR PRINTED

Visit www.enstromhelicopter.com for instructions to order an original manual and to register for email notification updates.

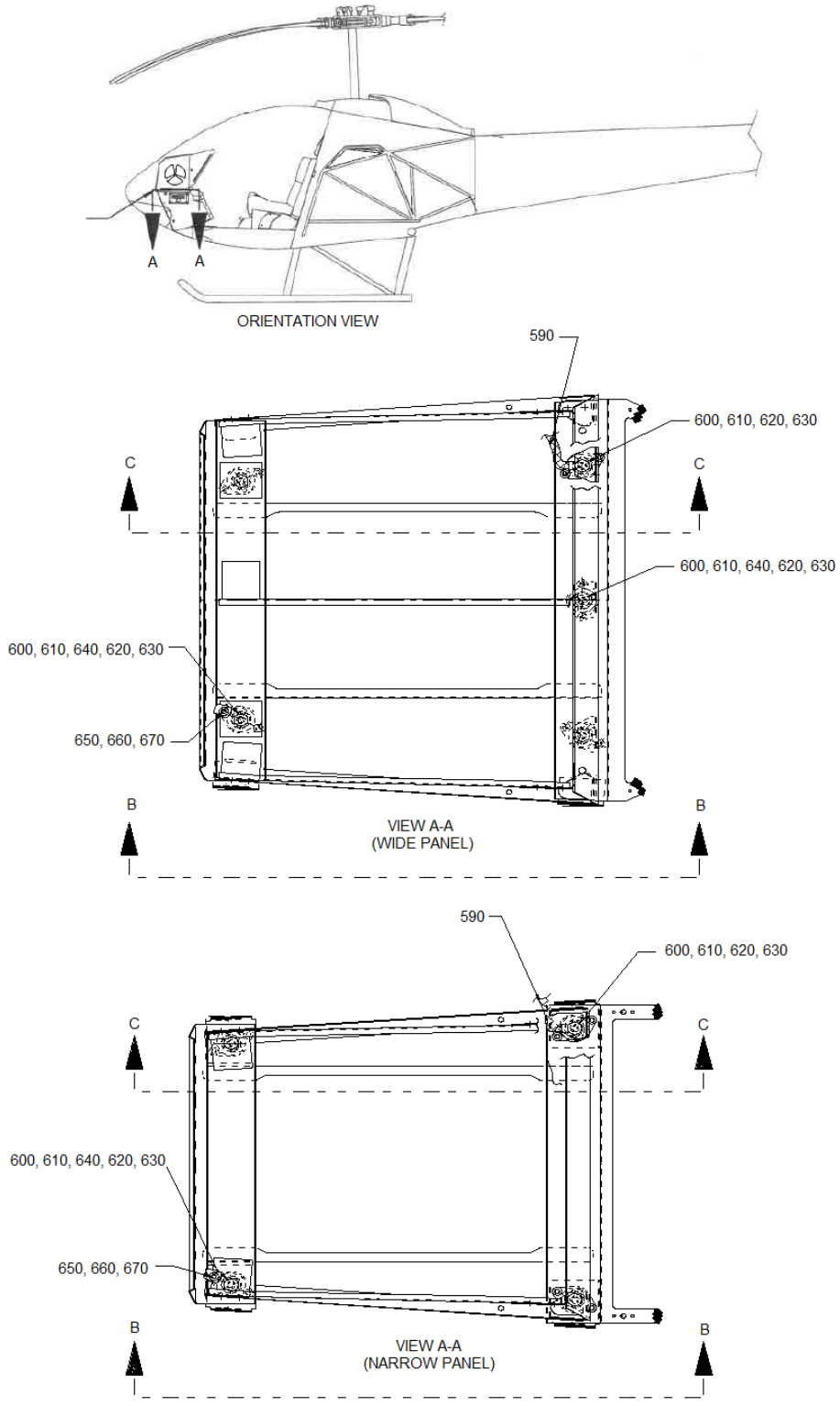

F-28F: S/N 833 AND SUBSEQUENT

Sheet 3 of 4

FIGURE 11-7. F-28F INSTRUMENT PANEL INSTALLATION (24V)

UNCONTROLLED COPY WHEN DOWNLOADED OR PRINTED

Visit www.enstromhelicopter.com for instructions to order an original manual and to register for email notification updates.

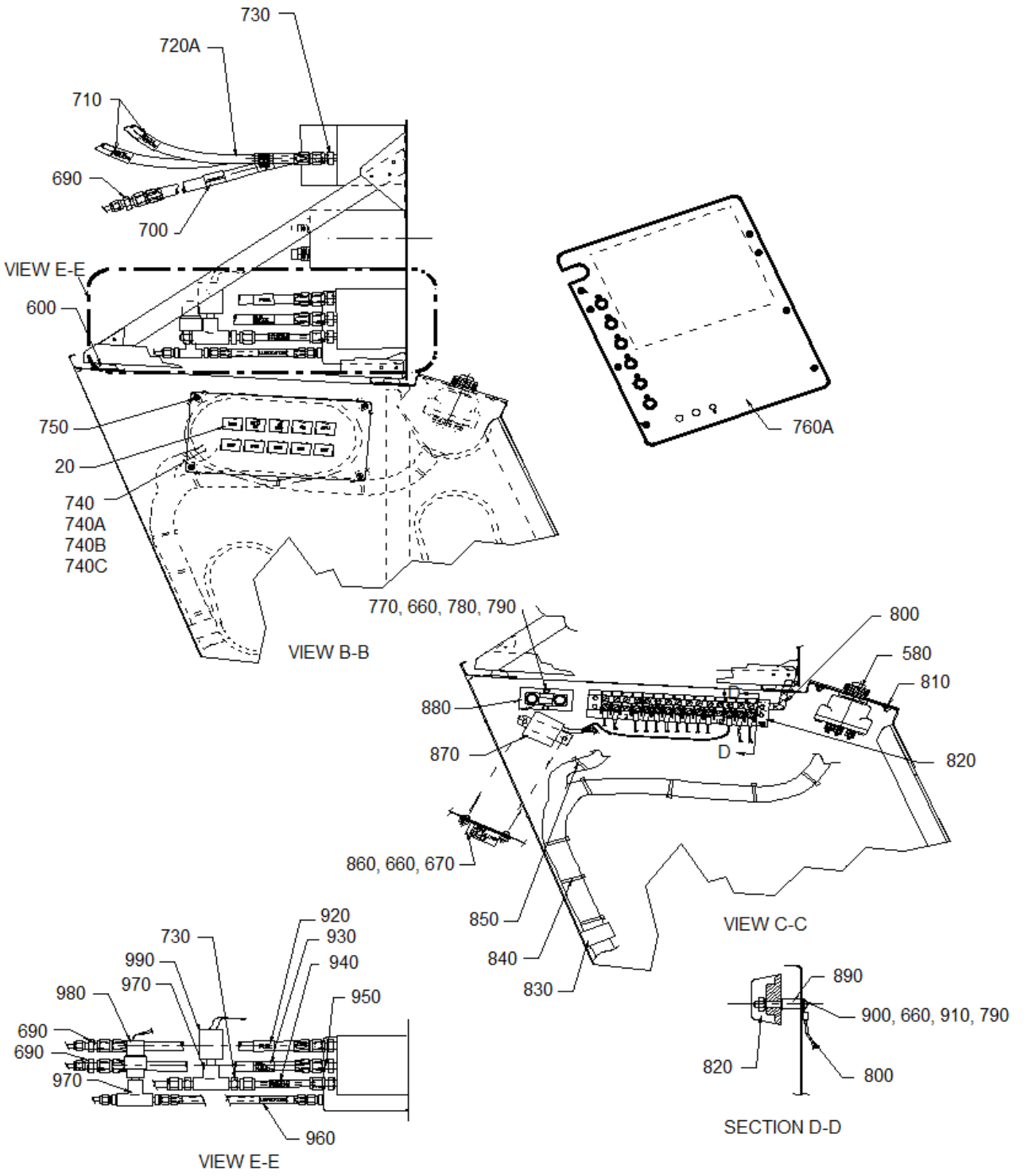

F-28F: S/N 833 AND SUBSEQUENT

Sheet 4 of 4

FIGURE 11-7. F-28F INSTRUMENT PANEL INSTALLATION (24V)

UNCONTROLLED COPY WHEN DOWNLOADED OR PRINTED

Visit www.enstromhelicopter.com for instructions to order an original manual and to register for email notification updates.

FIGURE 11-7. F-28F INSTRUMENT PANEL INSTALLATION (24V)

ITEM NUMBER	PART NUMBER	DESCRIPTION	QTY PER ASSY	MODELS AFFECTED						
				F-28A	280	F-28C	280C	F-28F	280F	280FX
–	28-18099-157	Instrument Installation 24V (Wide)	REF					X		
–	28-18099-169	Panel Assembly 24V (Wide)	REF					X		
–	28-18099-149	Instrument Installation 24V (Narrow)	REF					X		
–	28-18099-161	Panel Assembly 24V (Narrow) (Alternate to 28-18099-165)	REF					X		
–	28-18099-165	Panel Assembly 24V (Narrow)	REF					X		
10	28-19027-13	. LED Indicator Light Assy	1					X		
20	28-19064-1	. Placard	1					X		
30	30-1UL	. Switch	1					X		
40	28-19046-11	. Placard	1					X		
50	28-180020-11	. I.D. Panel	1					X		
60	Y9485	. Tape	A/R					X		
70	ECD089-3	. Light Assembly Annunciator	1					X		
80	327	. Lamp 24V	16					X		
90	MS35214-25	. Screw	6					X		
100	MS35214-31	. Screw	15					X		
110	MS33737-16C	. Instrument Mounting Nut	11					X		
120	5934PD-3-A.253	. Altimeter	1					X		
130	28-18060-11	. Cover	5					X		
130A	28-18060-13	. Cover	1					X		
130B	28-18060-15	. Cover	1					X		
140	MS35214-26	. Screw	30					X		
150	NAS1149FN616P	. Washer	30					X		
160	MS21083N06	. Nut	30					X		
170*	4196603-23	. Plug	1					X		
180*	A350CNIWBKSH28	. Post Lite	1					X		
190*	1040	. Inclinometer Ball	1					X		
200	MS35214-30	. Screw	2					X		
210	MS35214-15	. Screw	4					X		
220	NAS1149FN416P	. Washer	4					X		

UNCONTROLLED COPY WHEN DOWNLOADED OR PRINTED

Visit www.enstromhelicopter.com for instructions to order an original manual and to register for email notification updates.

FIGURE 11-7. F-28F INSTRUMENT PANEL INSTALLATION (24V)

ITEM NUMBER	PART NUMBER	DESCRIPTION	QTY PER ASSY	MODELS AFFECTED						
				F-28A	280	F-28C	280C	F-28F	280F	280FX
230	MS21044N04	. Nut	4					X		
240	ECD071-15	. Instrument Cluster	1					X		
250	ECD071-103	. . Fuel Qty. Gauge	1					X		
260	ECD071-104	. . Oil Temp. MRGB Gauge	1					X		
270	ECD071-105	. . Ammeter Gauge	1					X		
280	ECD071-106	. . Eng. Oil Press. Gauge	1					X		
290	ECD071-107	. . Eng. Oil Temp. Gauge	1					X		
300	ECD071-108	. . Cylinder Temp. Gauge	1					X		
310	28-18153-107	. Panel Assembly (Wide)	1					X		
–310A	28-18153-109	. Panel Assembly (Narrow) (Alternate)	1					X		
310B	28-18153-105	. Panel Assembly (Narrow)	1					X		
320	28-22540-17	. Placard	1					X		
330	AN515-B6R3	. Screw	4					X		
340	28-22543-13	. Placard	1					X		
350	28-22093-3	. EDM-700-4C Installation	1					X		
360	KN500B1/8	. Knob	1					X		
370	28-18101-11	. Bracket	1					X		
380	ECD077-11	. Manifold Pressure	1					X		
390	ECD072-11	. Dual Tachometer	1					X		
400	8000 B.852	. Airspeed	1					X		
–	60618-1	. Pin	11					X		
–	1-480319-0	. Pin Housing	4					X		
–	PLT4S-CO	. Cable Tie	A/R					X		
–	60617-1	. Socket	8					X		
–	1-480318-0	. Socket Housing	4					X		
410	160-012-70	. Circuit Breaker 70A P/P	1					X		
420	7274-2-2 1/2	. Circuit Breaker 2 ½ A	1					X		
430	1684	. Hole Plug	A/R					X		
440	7274-2-10	. Circuit Breaker 10A	2					X		
450	7274-2-5	. Circuit Breaker 5A	1					X		

UNCONTROLLED COPY WHEN DOWNLOADED OR PRINTED

Visit www.enstromhelicopter.com for instructions to order an original manual and to register for email notification updates.

FIGURE 11-7. F-28F INSTRUMENT PANEL INSTALLATION (24V)

ITEM NUMBER	PART NUMBER	DESCRIPTION	QTY PER ASSY	MODELS AFFECTED						
				F-28A	280	F-28C	280C	F-28F	280F	280FX
460	7274-2-3	. Circuit Breaker 3A	1					X		
–470	28-18069-31	. Panel (Alternate to 28-18069-15)	1					X		
470A	28-18069-15	. Panel	1					X		
–470B	28-18069-33	. Panel (Alternate to 28-18069-17)	1					X		
470C	28-18069-17	. Panel	1					X		
480	MS35214-28	. Screw	4					X		
490	28-18069-17	. Panel	1					X		
500	28-18171-31	. Panel (Wide)	1					X		
–500A	28-18171-33	. Panel (Narrow) (Alternate)	1					X		
500B	28-18171-29	. Panel (Narrow)	1					X		
510	7270-1-35	. Circuit Breaker Switch 35A	A/R					X		
520	7270-1-5	. Circuit Breaker Switch 5A	3					X		
530	1687	. Hole Plug	A/R					X		
540	7270-1-3	. Circuit Breaker Switch 3A	1					X		
550	7270-1-7 1/2	. Circuit Breaker Switch 7 ½ A	1					X		
560	12TS15-2	. Toggle Switch	2					X		
570	15PA90-4R	. Red Cap	1					X		
580	10-357290-1	. Ignition Switch	1					X		
590	28-19021-10	. Grounding Strap	1					X		
600	770001-5	. Mount	6					X		
610	NAS6603-14	. Bolt	6					X		
610	AN3-12A	. Bolt (Superseded by NAS6603-14)	6					X		
620	NAS1149F0332P	. Washer	6					X		
630	MS21044N3	. Nut	6					X		
640	NAS1149F0363P	. Nut	4					X		
650	MS35190-253	. Screw	10					X		
660	NAS1149FN832P	. Washer	24					X		
670	MS21083N08	. Nut	12					X		
680	7101SYZQE	. Switch	1					X		

UNCONTROLLED COPY WHEN DOWNLOADED OR PRINTED

Visit www.enstromhelicopter.com for instructions to order an original manual and to register for email notification updates.

FIGURE 11-7. F-28F INSTRUMENT PANEL INSTALLATION (24V)

ITEM NUMBER	PART NUMBER	DESCRIPTION	QTY PER ASSY	MODELS AFFECTED						
				F-28A	280	F-28C	280C	F-28F	280F	280FX
690	AN815-4D	. Coupling	4					X		
700	28-12472-11	. Placard	2					X		
710	28-12470-11	. Placard	4					X		
–720	28-18061-3	. Hose (Alternate)	7							
720A	28-18061-1	. Hose	7					X		
730	AN816-4D	. Adapter	6					X		
740	28-19073-1	. Fuse Panel Assembly	A/R					X		
740A	28-19073-3	. Fuse Panel Assembly	A/R					X		
740B	28-19073-5	. Fuse Panel Assembly	A/R					X		
740C	28-19073-7	. Fuse Panel Assembly	A/R					X		
750	6 X 3/8	. Screw	4					X		
–760	28-18200-1	. Radio Panel Installation (Alternate)	A/R							
760A	28-18200-3	. Radio Panel Installation	A/R					X		
770	MS35206-247	. Screw	2					X		
780	MS35338-42	. Lock Washer	4					X		
790	MS35649-282	. Nut	4					X		
800	28-19021-10	. Grounding Strap	1					X		
810	MS24693-BB50	. Screw	4					X		
820	28-19123-9	. Terminal Strip Assembly	1					X		
830	28-19023	. Clamp	1					X		
840	SST2S-MP	. Cable Tie	A/R					X		
850	SST1.5I-MP	. Cable Tie	A/R					X		
860	MS35206-244	. Screw	2					X		
870	B-00378-5	. Low Voltage Sensor (24V)	1					X		
880	22-370-60	. Shunt	1					X		
890	28-18033-1	. Spacer	2					X		
900	MS35206-250	. Screw	2					X		
910	MS35338-42	. Lock Washer	4					X		
920	28-12473-11	. Placard	2					X		

UNCONTROLLED COPY WHEN DOWNLOADED OR PRINTED

Visit www.enstromhelicopter.com for instructions to order an original manual and to register for email notification updates.

FIGURE 11-7. F-28F INSTRUMENT PANEL INSTALLATION (24V)

ITEM NUMBER	PART NUMBER	DESCRIPTION	QTY PER ASSY	MODELS AFFECTED						
				F-28A	280	F-28C	280C	F-28F	280F	280FX
930	28-12475-11	. Placard	2					X		
940	28-12471-11	. Placard	2					X		
950	28-180014-1	. Fitting Fuel Vent	1					X		
960	28-12474-11	. Placard	2					X		
970	AN917-1D	. Tee	2					X		
980	2335-265-1	. Oil Pressure Switch	1					X		
990	ECD078-11	. Pressure Switch	1					X		

* Omit these items, along with associated hardware, if an optional attitude gyro, turn and slip gyro with mechanical inclinometer ball, or PFD display with attitude indication is installed.

UNCONTROLLED COPY WHEN DOWNLOADED OR PRINTED

Visit www.enstromhelicopter.com for instructions to order an original manual and to register for email notification updates.

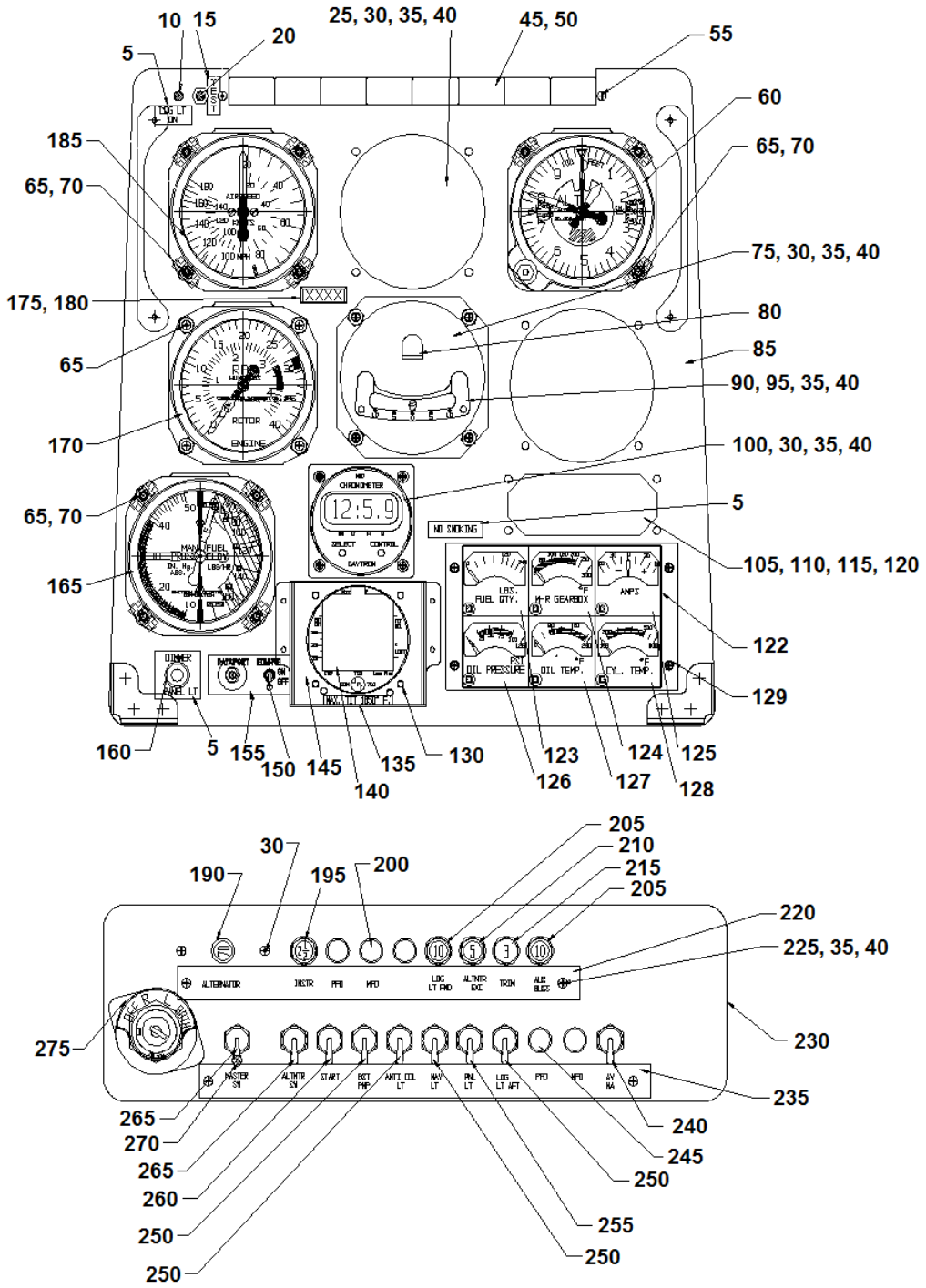

INSTRUMENT PANEL LAYOUTS MAY VARY DEPENDING ON CUSTOMER PREFERENCES.

280FX: S/N 2148 – 2166

Sheet 1 of 4

FIGURE 11-8. 280FX INSTRUMENTS AND INSTRUMENT PANEL

UNCONTROLLED COPY WHEN DOWNLOADED OR PRINTED

Visit www.enstromhelicopter.com for instructions to order an original manual and to register for email notification updates.

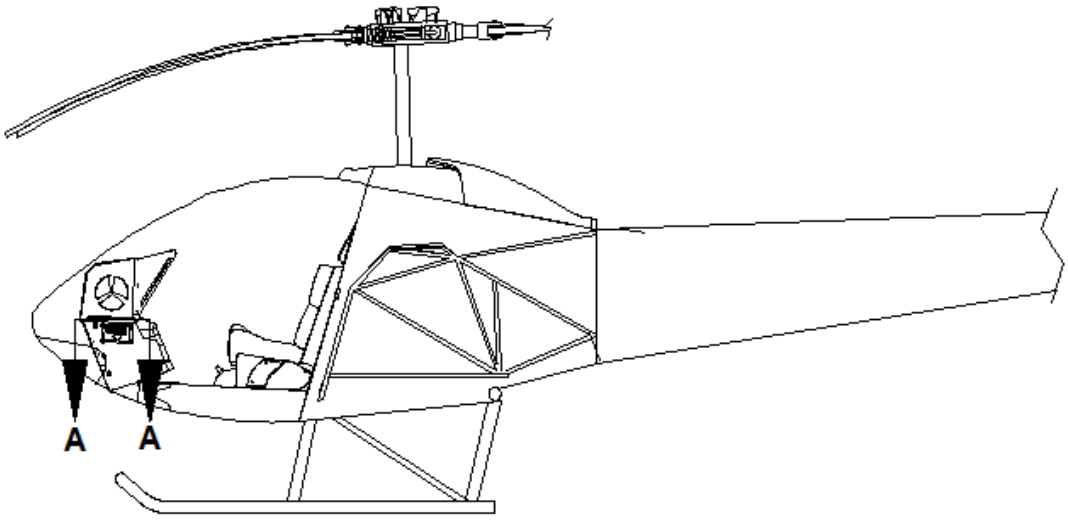

ORIENTATION VIEW

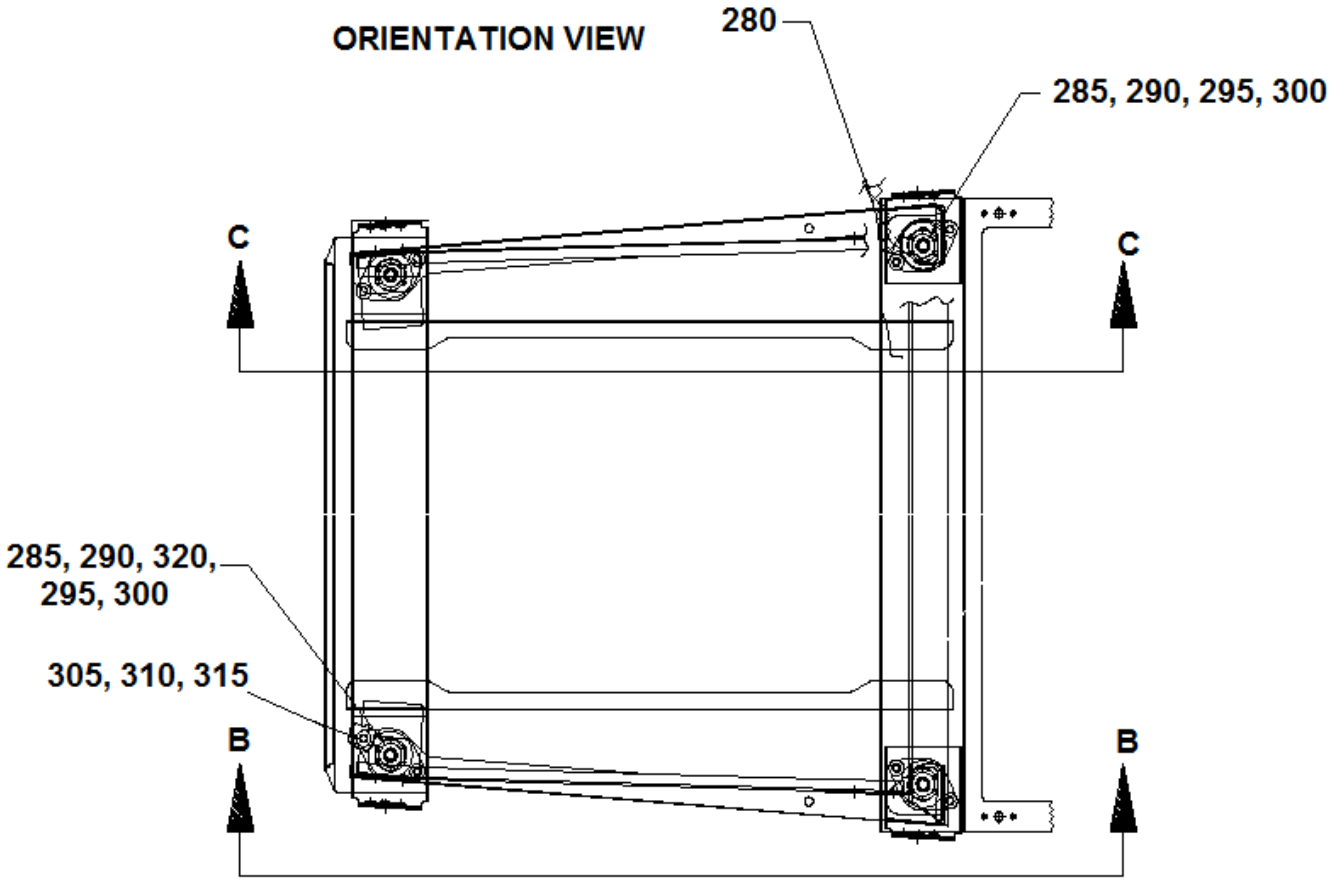

VIEW A-A

280FX: S/N 2148 – 2166

Sheet 2 of 4

FIGURE 11-8. 280FX INSTRUMENTS AND INSTRUMENT PANEL

UNCONTROLLED COPY WHEN DOWNLOADED OR PRINTED

Visit www.enstromhelicopter.com for instructions to order an original manual and to register for email notification updates.

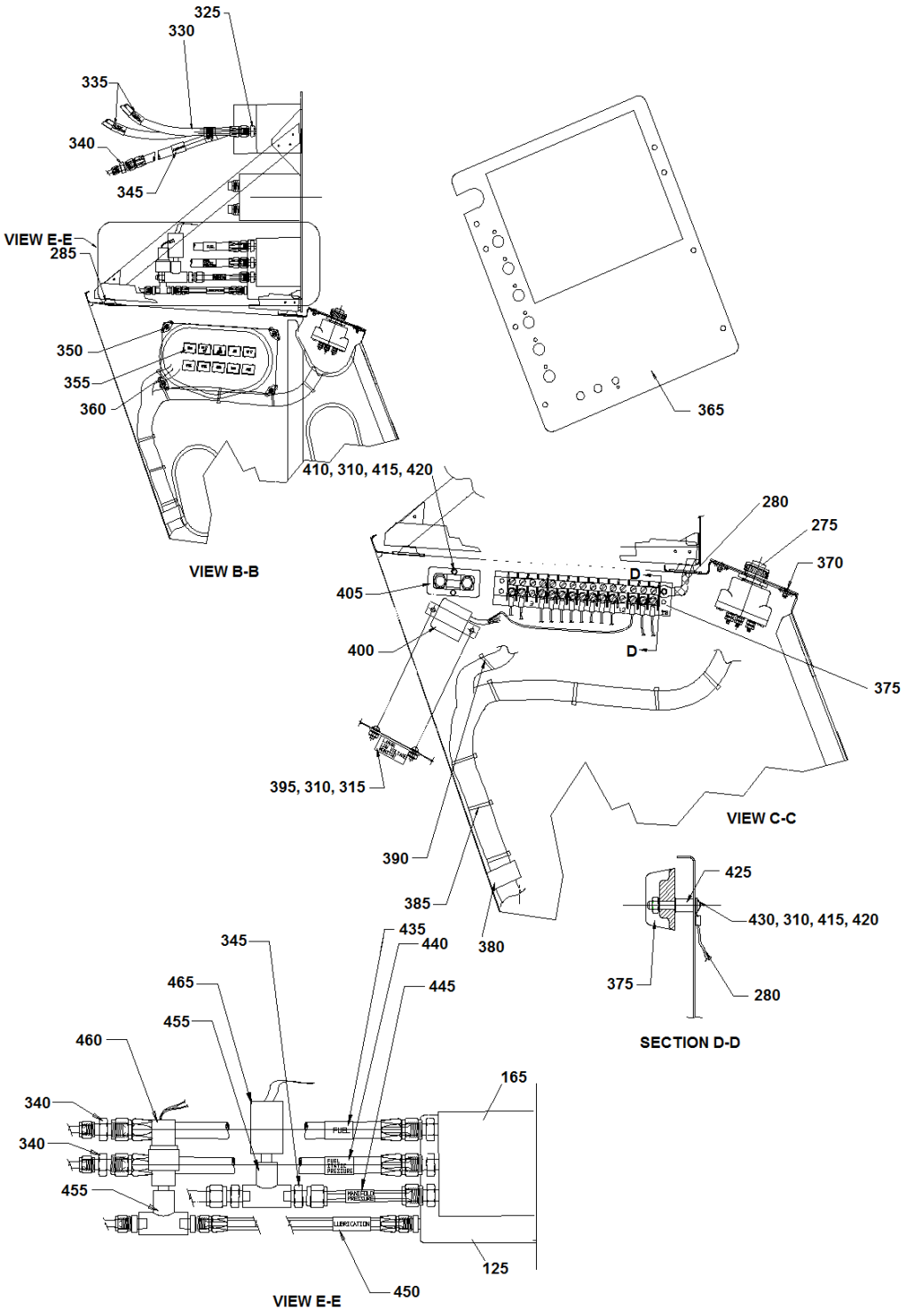

280FX: S/N 2148 – 2166

Sheet 3 of 4

FIGURE 11-8. 280FX INSTRUMENTS AND INSTRUMENT PANEL

UNCONTROLLED COPY WHEN DOWNLOADED OR PRINTED

Visit www.enstromhelicopter.com for instructions to order an original manual and to register for email notification updates.

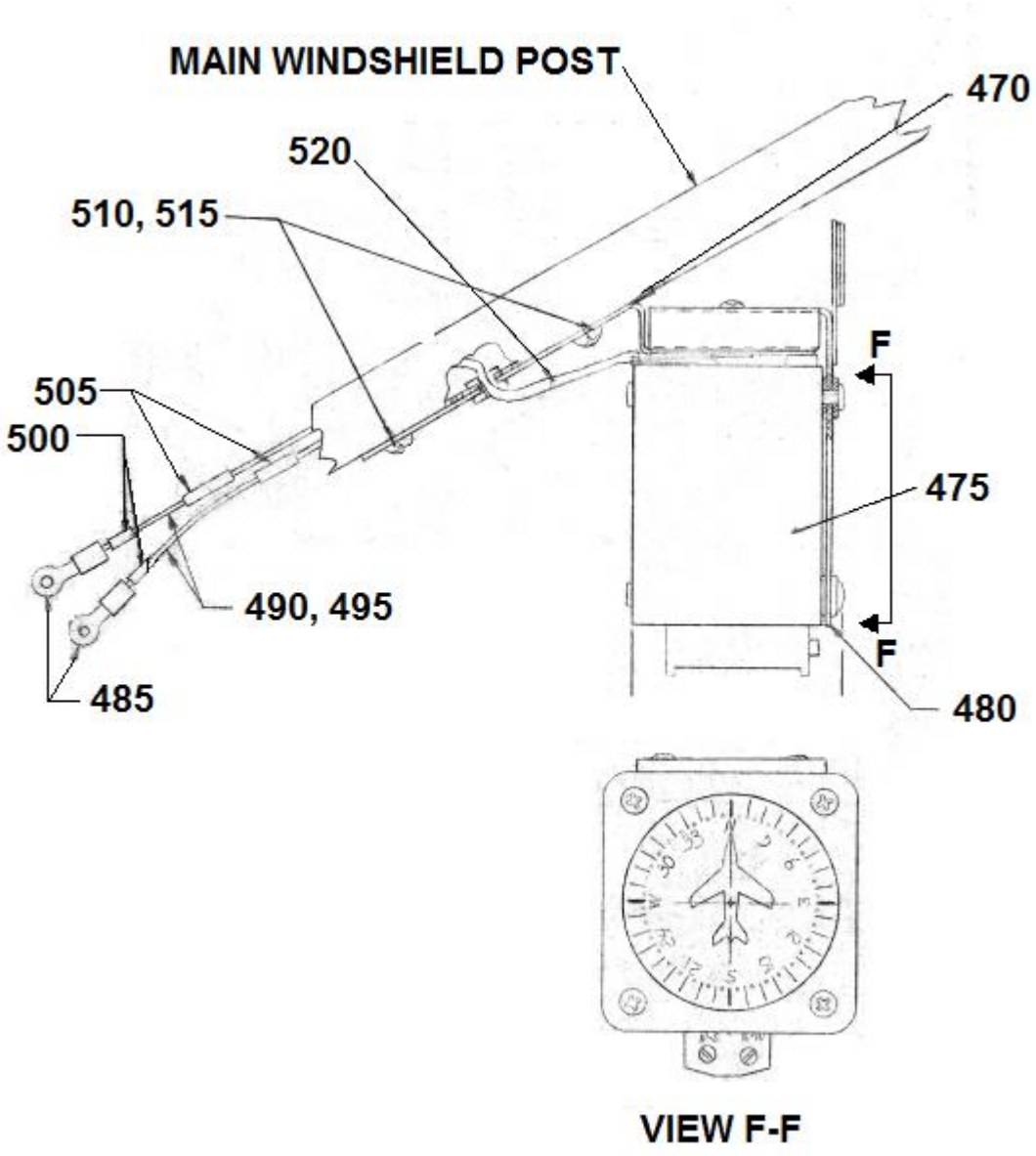

280FX: S/N 2148 AND SUBSEQUENT

Sheet 4 of 4

FIGURE 11-8. 280FX INSTRUMENTS AND INSTRUMENT PANEL

UNCONTROLLED COPY WHEN DOWNLOADED OR PRINTED

Visit www.enstromhelicopter.com for instructions to order an original manual and to register for email notification updates.

FIGURE 11-8. 280FX INSTRUMENTS AND INSTRUMENT PANEL

ITEM NUMBER	PART NUMBER	DESCRIPTION	QTY PER ASSY	MODELS AFFECTED						
				F-28A	280	F-28C	280C	F-28F	280F	280FX
–	28-18099-147	Instrument Installation (24V) 280FX (Narrow)	REF							X
–	28-18099-159	Panel Assembly (Narrow) (280FX) 24V	REF							X
5	4119835-33	. Placard (LDG LT ON)	1							X
10	28-19027-13	. LED Indicator Light Assembly	1							X
15	28-19046-11	. Placard (TEST)	1							X
20	30-1UL	. . Switch	1							X
25	28-18060-11	. Cover	2							X
30♦	MS35214-26	. Screw	18							X
35♦	NAS1149FN616P	. Washer	18							X
40♦	MS21083N06	. Nut	18							X
45	ECD089-3	. Light Assembly Annunciator	1							X
50	327	. Lamp 24V	16							X
55	MS35214-25	. Screw	2							X
60	5934PD-3-A.253	. Altimeter	1							X
65	MS35214-31	. Screw	15							X
–	AN816-4D	. Adapter	1							X
70	MS33737-16C	. Instrument Mounting Nut	11							X
75♦	4196603-23	. Plug	1							X
80♦	01-0770119-15	. Post Lite	1							X
85	28-18153-109	. Panel Assembly (Narrow) (Used with -159)	1							X
90♦	1040	. Inclinometer Ball	1							X
95♦	MS35214-30	. Screw	2							X
–Δ	28-22081-5	Davtron M800 Chronometer Installation	REF							X
100Δ	800-28V-BAT	. Clock	1							X
–100	28-18060-15	. Cover	1							X
–	MS35214-15	. Screw	4							X

UNCONTROLLED COPY WHEN DOWNLOADED OR PRINTED

Visit www.enstromhelicopter.com for instructions to order an original manual and to register for email notification updates.

FIGURE 11-8. 280FX INSTRUMENTS AND INSTRUMENT PANEL

ITEM NUMBER	PART NUMBER	DESCRIPTION	QTY PER ASSY	MODELS AFFECTED						
				F-28A	280	F-28C	280C	F-28F	280F	280FX
105	28-18060-13	. Cover	1							X
110	MS35214-15	. Screw	4							X
115	NAS1149FN416P	. Washer	4							X
120	MS21044N04	. Nut	4							X
122	ECD071-15	. Instrument Cluster	1							X
122	ECD071-13	. Instrument Cluster (Superseded by ECD071-15)	1							X
123	ECD071-103	. . Fuel Qty. Gauge	1							X
124	ECD071-104	. . Oil Temp. MRGB Gauge	1							X
125	ECD071-105	. . Ammeter Gauge	1							X
126	ECD071-106	. . Eng. Oil Press. Gauge	1							X
127	ECD071-107	. . Eng. Oil Temp. Gauge	1							X
128	ECD071-108	. . Cylinder Temp. Gauge	1							X
129	MS35214-27	. . Screw	4							X
–	AN816-4D	. Adapter	1							X
130	AN515-B6R3	. Screw	4							X
135	28-22543-13	. Placard (MAX. TIT 1650° F.)	1							X
140●	28-22093-3	. EDM-700-4C Installation	1							X
–	EGT-701-4C-A-T	. . Indicator w/Software Pt# 302661-REV 3.062	1							X
145	28-18101-11	. Bracket	1							X
150	7101SYZQE	. Switch	1							X
155	28-22540-17	. Placard	1							X
160	KN500B1/8	. Knob	1							X
165	ECD077-11	. Manifold Pressure	1							X
–	AN816-4D	. Adapter	1							X
–	28-180014-1	. Fitting Fuel Vent	1							X
–	60618-1	. Pin	3							X
–	1-480305-0	. Pin Housing	1							X

UNCONTROLLED COPY WHEN DOWNLOADED OR PRINTED

Visit www.enstromhelicopter.com for instructions to order an original manual and to register for email notification updates.

FIGURE 11-8. 280FX INSTRUMENTS AND INSTRUMENT PANEL

ITEM NUMBER	PART NUMBER	DESCRIPTION	QTY PER ASSY	MODELS AFFECTED						
				F-28A	280	F-28C	280C	F-28F	280F	280FX
–	381N-500-S	. Potentiometer	1							X
170	ECD072-11	. Dual Tachometer	1							X
175	28-180020-11	. I.D. Panel	1							X
180*	Y9485	. Tape	A/R							X
185	8000 B.853	. Airspeed	1							X
–	AN816-4D	. Adapter	1							X
190	160-012-70	. Circuit Breaker, 70 Amp	1							X
195	7274-2-2 1/2	. Circuit Breaker, 2 1/2 Amp	1							X
200	1684	. Hole Plug	A/R							X
205	7274-2-10	. Circuit Breaker, 10 Amp	2							X
210	7274-2-5	. Circuit Breaker, 5 Amp	1							X
215	7274-2-3	. Circuit Breaker, 3 Amp	1							X
220	28-18069-31	. Panel	1							X
225	MS35214-28	. Screw	4							X
230	28-18171-33	. Panel (Narrow) (Used with -159)	1							X
235	28-18069-33	. Panel	1							X
240	7270-1-35	. Circuit Breaker Switch, 35 Amp	A/R							X
245	1687	. Hole Plug	A/R							X
–*	732BL	. Sealant	A/R							X
250	7270-1-5	. Circuit Breaker Switch, 5 Amp	4							X
–*	732BL	. Sealant	A/R							X
255	7270-1-3	. Circuit Breaker Switch, 3 Amp	1							X
260	7270-1-7 1/2	. Circuit Breaker Switch, 7 1/2 Amp	1							X
265	12TS15-2	. Toggle Switch	2							X
270	15PA90-4R	. Red Cap	1							X
275	10-357290-1	. Ignition Switch	1							X
280	28-19021-10	. (40-6) Grounding Strap	1							X
285	770001-5	. Mount	4							X

UNCONTROLLED COPY WHEN DOWNLOADED OR PRINTED

Visit www.enstromhelicopter.com for instructions to order an original manual and to register for email notification updates.

FIGURE 11-8. 280FX INSTRUMENTS AND INSTRUMENT PANEL

ITEM NUMBER	PART NUMBER	DESCRIPTION	QTY PER ASSY	MODELS AFFECTED						
				F-28A	280	F-28C	280C	F-28F	280F	280FX
290	NAS6603-14	. Bolt	4							X
290	AN3-12A	. Bolt (Alternate)	4							X
295	NAS1149F0332P	. Washer	5							X
300	MS21044N3	. Nut	4							X
305	MS35190-253	. Screw	8							X
310	NAS1149FN832P	. Washer	22							X
315	MS21083N08	. Nut	10							X
320	NAS1149F0363P	. Washer	3							X
325	AN816-4D	. Adapter	10							X
330	28-18061-1	. Hose Assembly (Low Pressure)	7							X
–	MS27404-4D	. . Fitting	2							X
–	MIL-DTL-5593	. . Hose	1							X
335	28-12470-11	. Placard (STATIC PRESSURE)	4							X
340	AN815-4D	. Coupling	4							X
345	28-12472-11	. Placard (AIRSPEED)	2							X
350	6 X 3/8	. Screw	4							X
355	4119835-33	. Placard	1							X
360	28-19073-101	. Fuse Panel Assembly	1							X
365	28-18200-1	. Radio Panel Installation	A/R							X
–	MS24694-50	. Screw	8							X
370	MS24693-BB50	. Screw	4							X
375	28-19123-9	. Terminal Strip Assembly	1							X
380	28-19023	. Clamp	1							X
385	SST2S-MP	. Cable Tie	A/R							X
390	SST1.5I-MP	. Cable Tie	A/R							X
395	MS35206-244	. Screw	2							X
400	B-00378-5	. Low Voltage Sensor (24V)	1							X
405	22-370-60	. Shunt	1							X
410	MS35206-247	. Screw	2							X

UNCONTROLLED COPY WHEN DOWNLOADED OR PRINTED

Visit www.enstromhelicopter.com for instructions to order an original manual and to register for email notification updates.

FIGURE 11-8. 280FX INSTRUMENTS AND INSTRUMENT PANEL

ITEM NUMBER	PART NUMBER	DESCRIPTION	QTY PER ASSY	MODELS AFFECTED						
				F-28A	280	F-28C	280C	F-28F	280F	280FX
415	MS35338-42	. Lock Washer	4							X
420	MS35649-282	. Nut	4							X
425	28-18033-1	. Spacer	2							X
430	MS35206-250	. Screw	2							X
435	28-12473-11	. Placard (FUEL)	2							X
440	28-12475-11	. Placard (FUEL STATIC PRESSURE)	2							X
445	28-12471-11	. Placard (MANIFOLD PRESSURE)	2							X
450	28-12474-11	. Placard (LUBRICATION)	1							X
455	AN917-10	. Tee	2							X
460	2335-265-1	. Oil Pressure Switch	1							X
465	ECD078-11	. Pressure Switch	1							X
–	FIT-221V-3/32	. Shrink Tube	A/R							X
–	28-18084-1	Magnetic Compass Installation	REF							X
470	4016	. Tape	A/R							X
475	PAI-700 28V	. Compass	1							X
480	PACMO-APZ2IN	. Mounting Bracket	1							X
485	AA-832-06	. Terminals	2							X
490	AWG-22-8503-10	. Wire	A/R							X
495	AWG-22-8503-2	. Wire	A/R							X
500	PVC-13	. Wire Markers	2							X
505	3028-3/32	. Heat Shrink Tubing	A/R							X
510	MS35338-99	. Brass Lock Washer	2							X
515	MS35214-44	. Screw	2							X
520	3028-3/32	. Shrink Tube	A/R							X

♦ When an optional attitude gyro, turn and slip gyro with mechanical inclinometer ball, or PFD display with attitude indication is installed, Items 75, 80, 90, and associated hardware Items 30, 35, 40, and 95 should not be installed.

Δ Customer option.

UNCONTROLLED COPY WHEN DOWNLOADED OR PRINTED

Visit www.enstromhelicopter.com for instructions to order an original manual and to register for email notification updates.

– Not illustrated.

* Or equivalent. Contact Enstrom Product Support for alternative products.

● See Figure 11-5C.

UNCONTROLLED COPY WHEN DOWNLOADED OR PRINTED

Visit www.enstromhelicopter.com for instructions to order an original manual and to register for email notification updates.

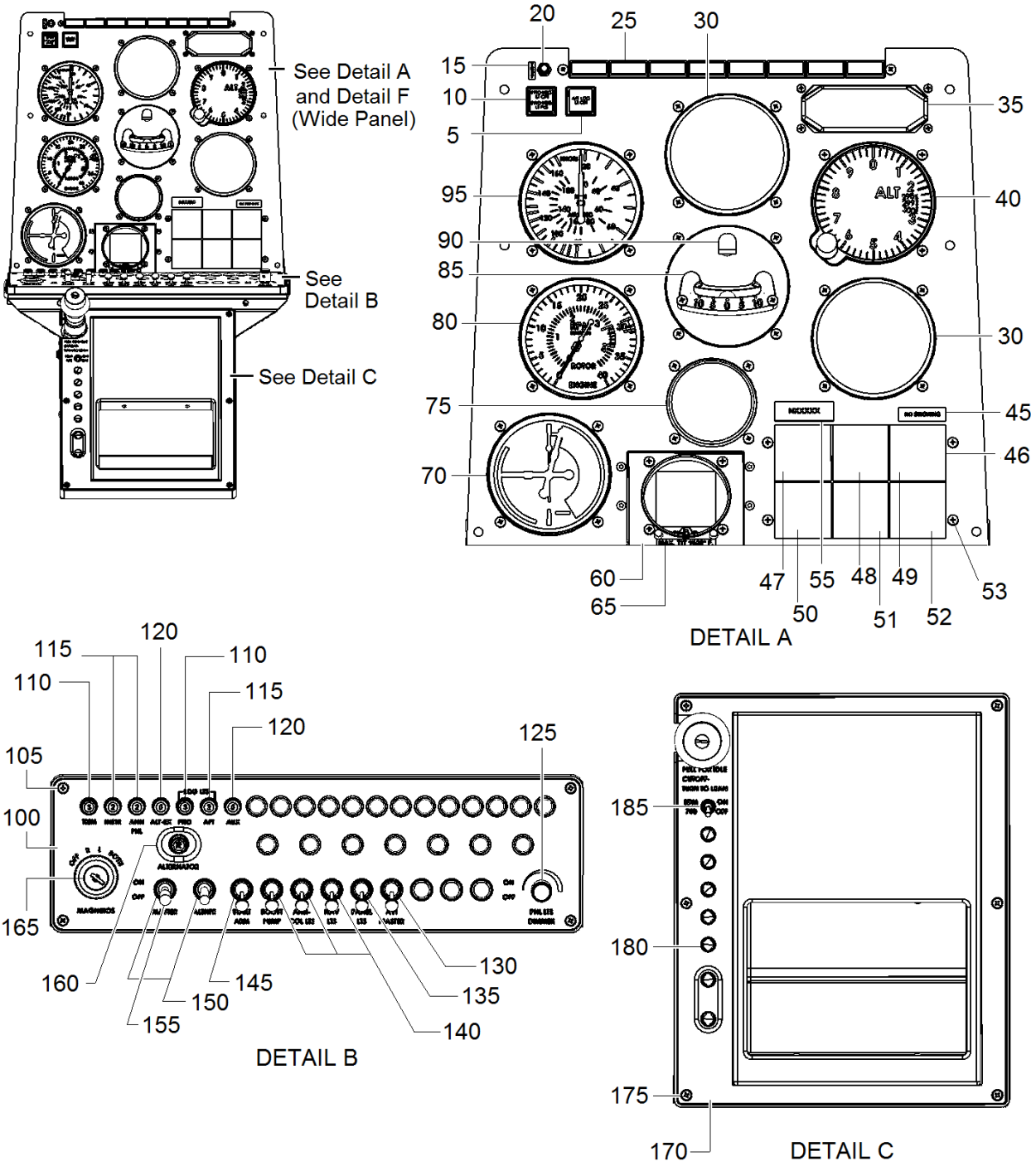

INSTRUMENT PANEL LAYOUT MAY VARY DEPENDING ON CUSTOMER PREFERENCES.

280FX: S/N 2167 AND SUBSEQUENT

Sheet 1 of 4

FIGURE 11-9. 280FX INSTRUMENTS AND INSTRUMENT PANEL

UNCONTROLLED COPY WHEN DOWNLOADED OR PRINTED

Visit www.enstromhelicopter.com for instructions to order an original manual and to register for email notification updates.

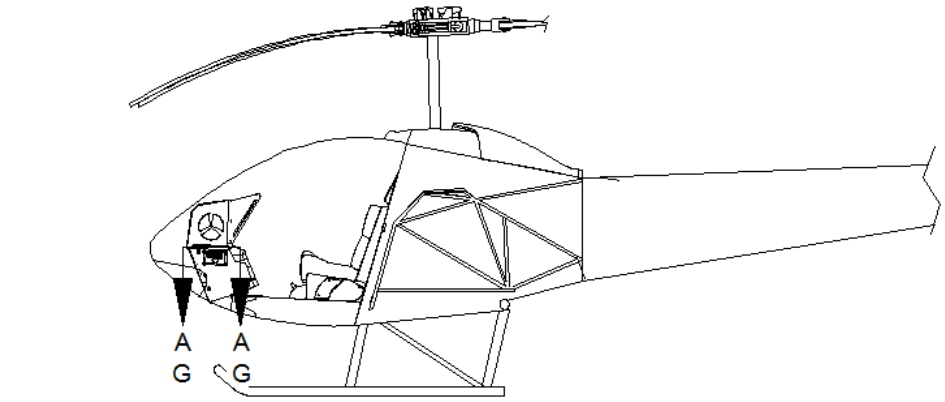

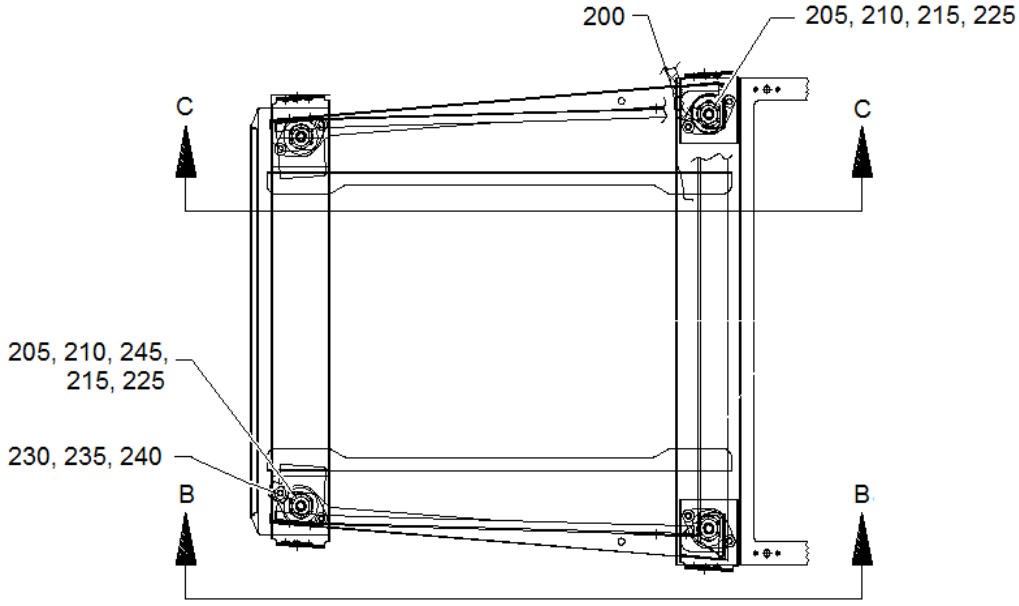

VIEW A-A

280FX: S/N 2167 AND SUBSEQUENT

Sheet 2 of 4

FIGURE 11-9. 280FX INSTRUMENTS AND INSTRUMENT PANEL

UNCONTROLLED COPY WHEN DOWNLOADED OR PRINTED

Visit www.enstromhelicopter.com for instructions to order an original manual and to register for email notification updates.

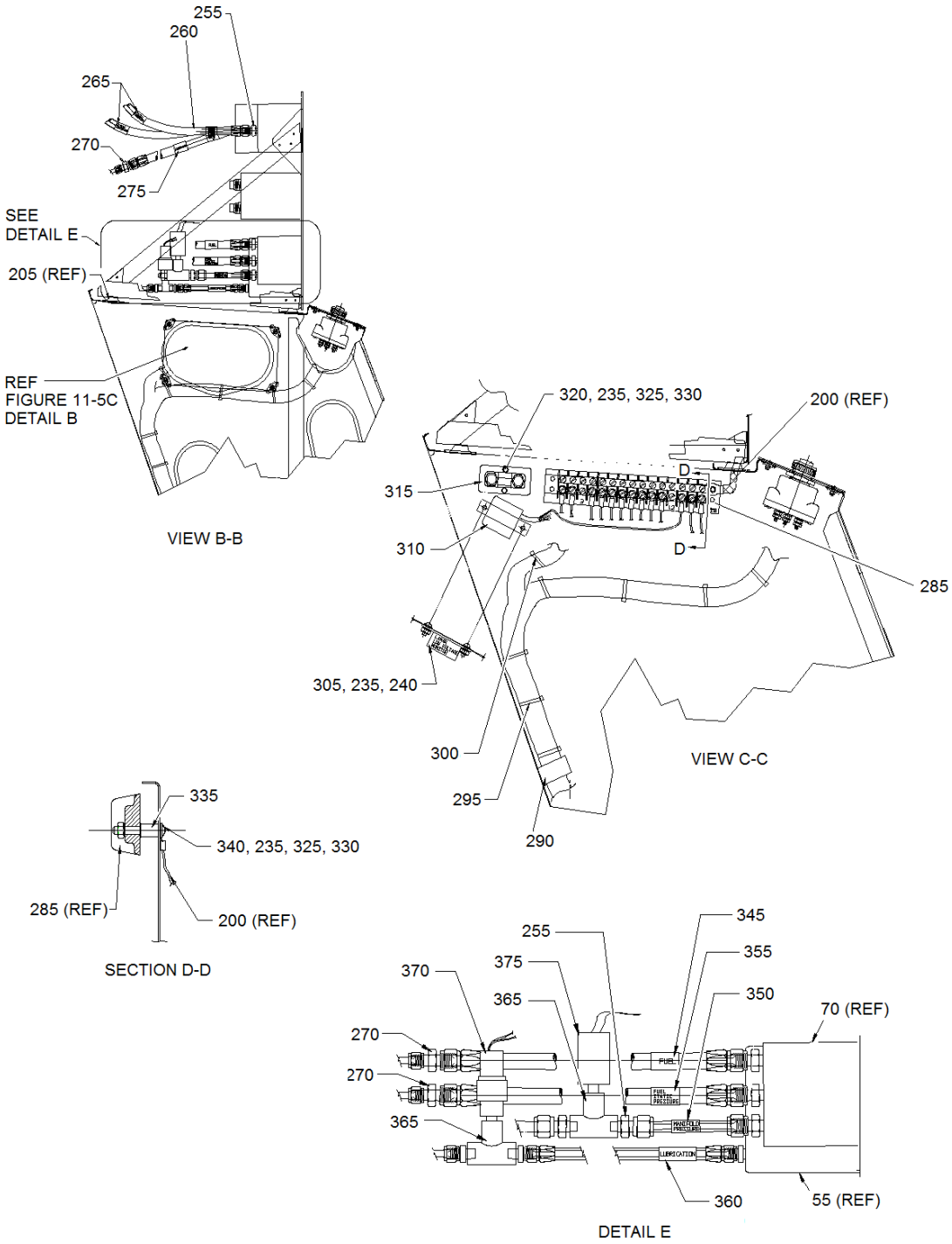

280FX: S/N 2167 AND SUBSEQUENT

Sheet 3 of 4

FIGURE 11-9. 280FX INSTRUMENTS AND INSTRUMENT PANEL

UNCONTROLLED COPY WHEN DOWNLOADED OR PRINTED

Visit www.enstromhelicopter.com for instructions to order an original manual and to register for email notification updates.

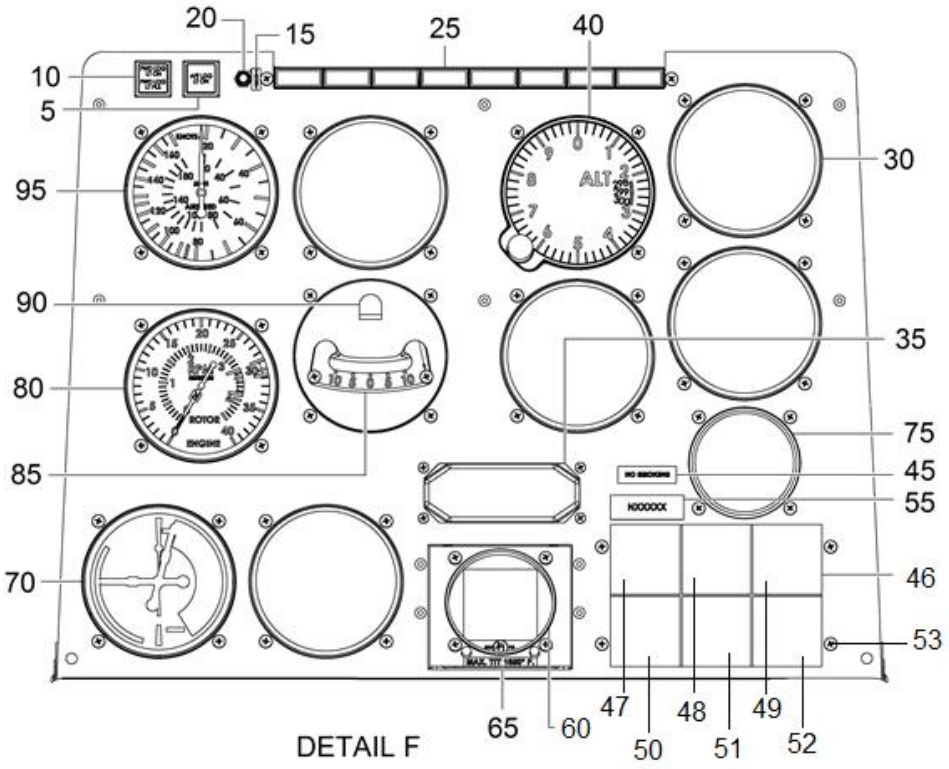

DETAIL F

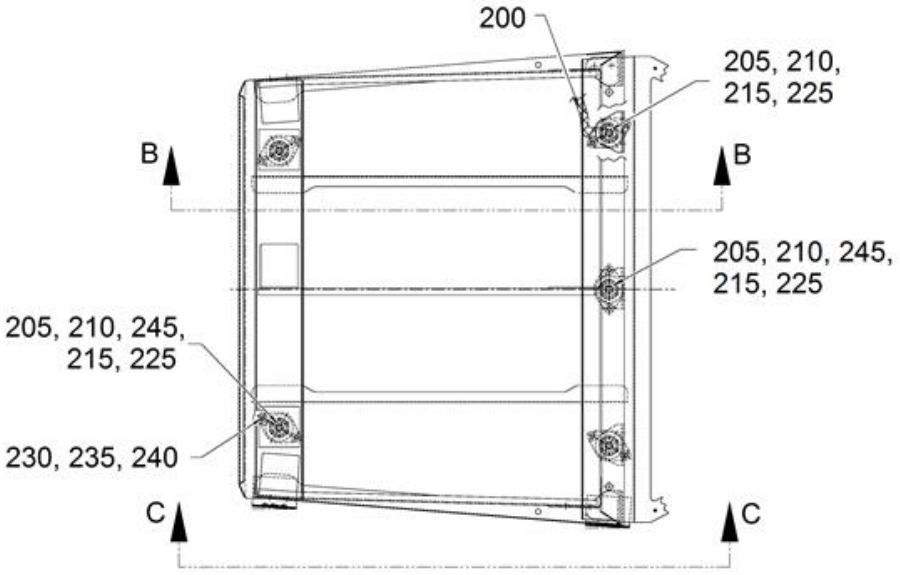

VIEW G-G

INSTRUMENT PANEL LAYOUT MAY VARY DEPENDING ON CUSTOMER PREFERENCES.

280FX: S/N 2167 AND SUBSEQUENT
(WIDE PANEL OPTION)

Sheet 4 of 4

FIGURE 11-9. 280FX INSTRUMENTS AND INSTRUMENT PANEL

UNCONTROLLED COPY WHEN DOWNLOADED OR PRINTED

Visit www.enstromhelicopter.com for instructions to order an original manual and to register for email notification updates.

FIGURE 11-9. 280FX INSTRUMENTS AND INSTRUMENT PANEL

ITEM NUMBER	PART NUMBER	DESCRIPTION	QTY PER ASSY	MODELS AFFECTED						
				F-28A	280	F-28C	280C	F-28F	280F	280FX
–	28-18099-171	Instrument Installation 280FX (Narrow)	REF							X
–	28-18099-173	Instrument Installation 280FX (Wide)	REF							X
5	LED-40-1J-HG2-SBMMF	. Aft Landing Light Annunciator	1							X
10	LED-40-1J-HG2-SBMMD	. FWD Landing Light Annunciator	1							X
15	28-19046-11	. Placard (TEST)	1							X
20	30-1UL	. . Switch	1							X
25	ECD089-3	. Light Assembly Annunciator	1							X
–	MS35214-15	. Screw	2							X
–	327	. Lamp 24V	16							X
30	28-18060-11	. Instrument Cutout Cover	A/R							X
–	MS35214-26	. Screw	A/R							X
–	NAS1149FN616P	. Washer	A/R							X
–	MS21083N06	. Nut	A/R							X
35	28-18060-13	. Cover	1							X
–	MS35214-15	. Screw	4							X
–	NAS1149FN416P	. Washer	4							X
–	MS21044N04	. Nut	4							X
40	5934PD-3-A.253	. Altimeter	1							X
–	MS35214-31	. Screw	3							X
45	28-19064-1	. Placard	1							X
46	ECD071-15	. Instrument Cluster	1							X
47	ECD071-103	. . Fuel Qty. Gauge	1							X
48	ECD071-104	. . Oil Temp. MRGB Gauge	1							X
49	ECD071-105	. . Ammeter Gauge	1							X
50	ECD071-106	. . Eng. Oil Press. Gauge	1							X
51	ECD071-107	. . Eng. Oil Temp. Gauge	1							X
52	ECD071-108	. . Cylinder Temp. Gauge	1							X

UNCONTROLLED COPY WHEN DOWNLOADED OR PRINTED

Visit www.enstromhelicopter.com for instructions to order an original manual and to register for email notification updates.

FIGURE 11-9. 280FX INSTRUMENTS AND INSTRUMENT PANEL

ITEM NUMBER	PART NUMBER	DESCRIPTION	QTY PER ASSY	MODELS AFFECTED						
				F-28A	280	F-28C	280C	F-28F	280F	280FX
53	MS35214-27	. Screw	4							X
55	28-180020-11	. Placard	1							X
60*	28-22093-3	. EDM-700-4C Installation	REF							X
–	AN515-B6R3	. Screw	4							X
65	28-22543-13	. Placard (Included in Item 60)	REF							X
70	ECD077-11	. Manifold Pressure and Fuel Flow Gauge	1							X
–	MS35214-31	. Screw	4							X
75	28-18060-15	. Cover	1							X
–	MS35214-26	. Screw	4							X
–	NAS1149FN616P	. Washer	4							X
–	MS21083N06	. Nut	4							X
80	ECD072-11	. Dual Tachometer	1							X
–	MS35214-31	. Screw	4							X
85♦	1040	. Inclinometer	1							X
90♦	01-0770119-15	. Post Lite	1							X
–♦	4196603-23	. Plug	1							X
–♦	MS35214-30	. Screw	2							X
–	MS35214-26	. Screw	4							X
–♦♦	NAS1149FN616P	. Washer	6							X
–♦♦	MS21083N06	. Nut	6							X
95	8000 B.853	. Airspeed Indicator	1							X
–	MS35214-31	. Screw	4							X
100	ECD112-1	. Illuminated Panel	1							X
105	MS24693-BB26	. Screw	4							X
110	7277-5-3	. Circuit Breaker (3 Amp)	2							X
115	7277-5-2	. Circuit Breaker (2 Amp)	3							X
120	7277-5-5	. Circuit Breaker (5 Amp)	2							X
125	KN500B1/8	. Knob	1							X
–	381N-500-S	. Potentiometer	1							X

UNCONTROLLED COPY WHEN DOWNLOADED OR PRINTED

Visit www.enstromhelicopter.com for instructions to order an original manual and to register for email notification updates.

FIGURE 11-9. 280FX INSTRUMENTS AND INSTRUMENT PANEL

ITEM NUMBER	PART NUMBER	DESCRIPTION	QTY PER ASSY	MODELS AFFECTED						
				F-28A	280	F-28C	280C	F-28F	280F	280FX
130	7270-1-35	. Switch (35 Amp)	1							X
135	7270-1-3	. Switch (3 Amp)	1							X
140	7270-1-5	. Switch (5 Amp)	3							X
145	7270-1-7½	. Switch (7½ Amp)	1							X
150	12TS15-2	. Switch-Toggle	2							X
155	15PA90-4R	. Cap (red)	1							X
160	160-012-70	. Circuit Breaker	1							X
165	10-357290-1	. Ignition Switch	1							X
170	ECD112-3	. Illuminated Radio Panel	1							X
175	MS24693-BB26	. Screw	6							X
180	1678	. Plug	7							X
185	7101SYZQE	. Switch (Included with Item 60)	REF							X
200	28-19021-10	. Grounding Strap	1							X
205**	770001-5	. Mount	4							X
210**	AN3-12A	. Bolt	4							X
215**	NAS1149F0332P	. Washer	5							X
225**	MS21044N3	. Nut	4							X
230	MS35190-253	. Screw	8							X
235	NAS1149FN832P	. Washer	16							X
240	MS21083N08	. Nut	10							X
245**	NAS1149F0363P	. Washer	3							X
255	AN816-4D	. Adapter	10							X
260	28-18061-1	. Hose	7							X
265	28-12470-11	. Placard	2							X
270	AN815-4D	. Coupling	3							X
275	28-12472-11	. Placard	2							X
285	28-19123-9	. Terminal Strip	1							X
290	28-19023	. Clamp	1							X

UNCONTROLLED COPY WHEN DOWNLOADED OR PRINTED

Visit www.enstromhelicopter.com for instructions to order an original manual and to register for email notification updates.

FIGURE 11-9. 280FX INSTRUMENTS AND INSTRUMENT PANEL

ITEM NUMBER	PART NUMBER	DESCRIPTION	QTY PER ASSY	MODELS AFFECTED						
				F-28A	280	F-28C	280C	F-28F	280F	280FX
295	SST2S-MP	. Cable Tie	A/R							X
300	SST1.5I-MP	. Cable Tie	A/R							X
305	MS35206-244	. Screw	2							X
310	B-00378-5	. Low Voltage Sensor	1							X
315	22-370-60	. Shunt	1							X
320	MS35206-247	. Screw	2							X
325	MS35338-42	. Lock Washer	4							X
330	MS35649-282	. Nut	4							X
335	28-18033-1	. Spacer	2							X
340	MS35206-250	. Screw	2							X
345	28-12473-11	. Placard	2							X
350	28-12471-11	. Placard	2							X
355	28-12475-11	. Placard	2							X
360	28-12474-11	. Placard	2							X
365	AN917-1D	. Tee	1							X
370	2335-265-1	. Oil Pressure Switch	1							X
375	ECD078-11	. Pressure Switch	1							X

– Not illustrated.

♦ Omit these items if an optional attitude gyro, turn and slip gyro with mechanical inclinometer ball, or PFD display with attitude indication is installed.

♦♦ Reduce quantity by two if an optional attitude gyro, turn and slip gyro with mechanical inclinometer ball, or PFD display with attitude indication is installed.

* See Figure 11-5C.

** Increase quantity by one (1) for the 28-18099-173 wide instrument panel.

UNCONTROLLED COPY WHEN DOWNLOADED OR PRINTED

Visit www.enstromhelicopter.com for instructions to order an original manual and to register for email notification updates.

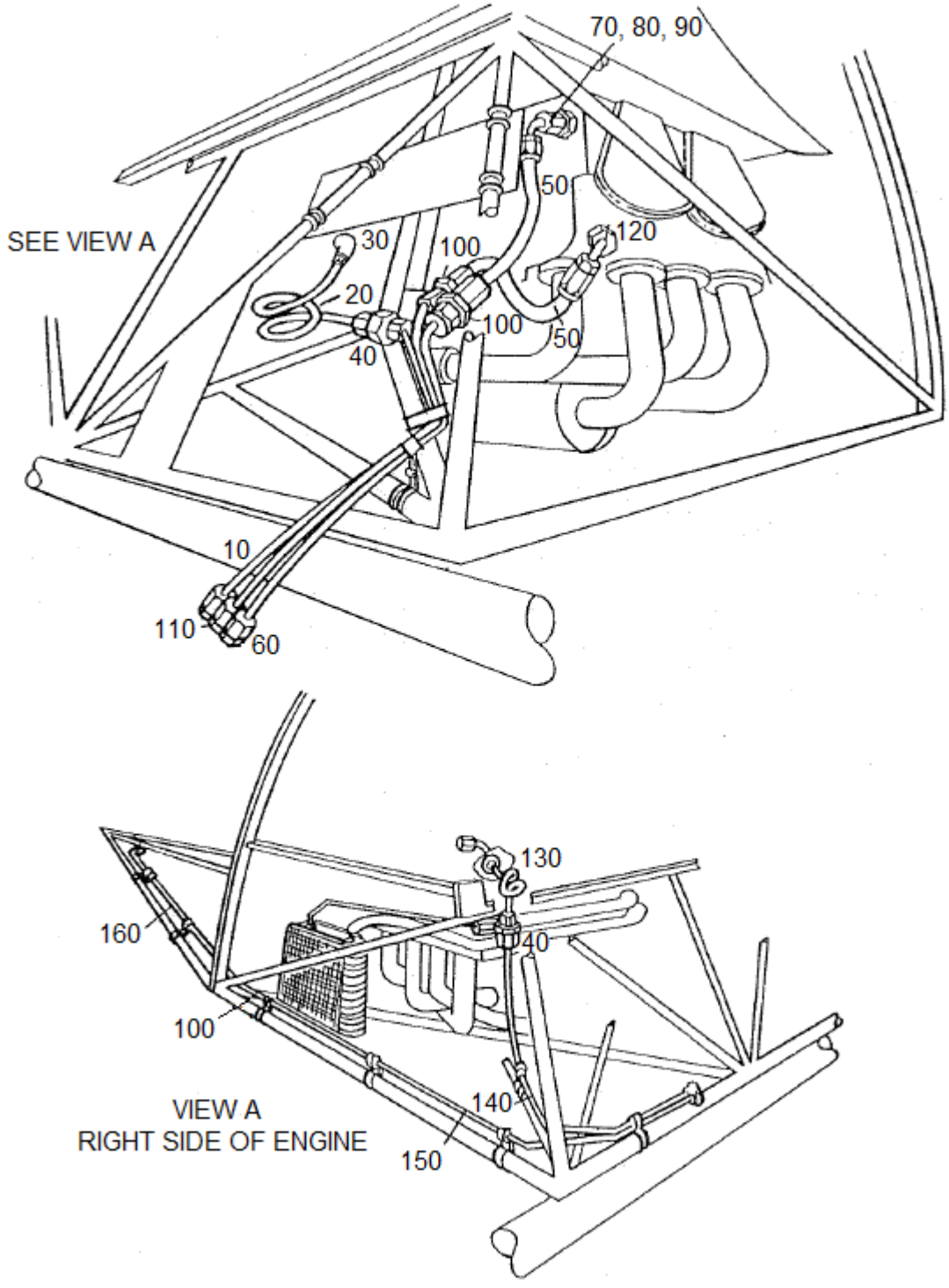

FIGURE 11-10. F-28A AND 280 INSTRUMENT LINE PYLON LOCATION

UNCONTROLLED COPY WHEN DOWNLOADED OR PRINTED

Visit www.enstromhelicopter.com for instructions to order an original manual and to register for email notification updates.

FIGURE 11-10. F-28A AND 280 INSTRUMENT LINE PYLON LOCATION

ITEM NUMBER	PART NUMBER	DESCRIPTION	QTY PER ASSY	MODELS AFFECTED						
				F-28A	280	F-28C	280C	F-28F	280F	280FX
10	28-12100-7	. Oil Pressure Line	1	X	X					
20	28-12100-9	. Oil Pressure Line	1	X	X					
30▲	MS20822-2	. Elbow	2	X	X					
40	AN919-1S	. Reducer	2	X	X					
50	601002-4-0120	. Flex Line-Fuel Vent	2	X	X					
60	28-12100-13	. Fuel Vent Line	1	X	X					
70	AN832-4D	. Bulkhead Fitting	1	X	X					
80	AN960-716	. Washer	1	X	X					
90	AN924-4D	. Nut	2	X	X					
100	AN815-4D	. Union	4	X	X					
110	28-12100-6	. Manifold Pressure Line	1	X	X					
120▲	MS20823-4D	. Elbow 45°	1	X	X					
130	28-18103-3	. Fuel Pressure Line	1	X	X					
140	28-18103-5	. Fuel Pressure Line	1	X	X					
150	28-18103-6	. Pitot Pressure Line	1	X	X					
160	28-18103-7	. Pitot Pressure Line	1	X	X					

NOTE: Information contained herein represents components as installed at the time of manufacture.

▲ Last three digits of “MS” basic number are the equivalent “AN” part number.

UNCONTROLLED COPY WHEN DOWNLOADED OR PRINTED

Visit www.enstromhelicopter.com for instructions to order an original manual and to register for email notification updates.

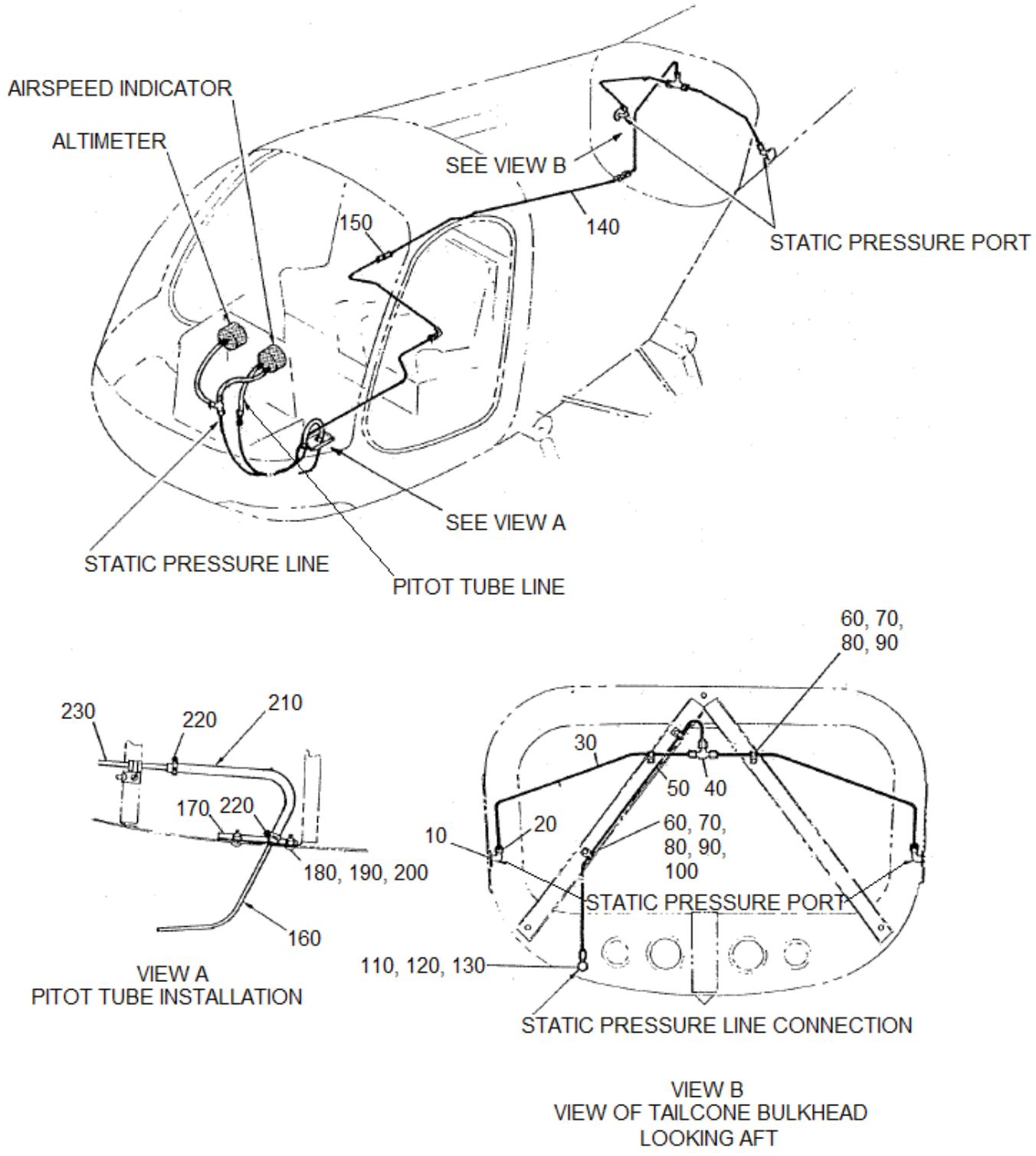

FIGURE 11-11. PITOT STATIC SYSTEM INSTALLATION

UNCONTROLLED COPY WHEN DOWNLOADED OR PRINTED

Visit www.enstromhelicopter.com for instructions to order an original manual and to register for email notification updates.

FIGURE 11-11. PITOT STATIC SYSTEM INSTALLATION

ITEM NUMBER	PART NUMBER	DESCRIPTION	QTY PER ASSY	MODELS AFFECTED						
				F-28A	280	F-28C	280C	F-28F	280F	280FX
10	28-18103-4	. Fitting - Vent	2	X	X	X	X	X	X	X
20	AN822-4D	. Elbow	2	X	X	X	X	X	X	X
30	28-18113-1	. Static Vent Line	2	X	X	X	X	X	X	X
40	AN834-4D	. Tee Fitting	1	X	X	X	X	X	X	X
50	28-18112-1	. Static Vent Line	1	X	X	X	X	X	X	X
60	MS21919F4	. Clamp	4	X	X	X	X	X	X	X
70	AN526-1032R8	. Screw	4	X	X	X	X	X	X	X
80	NAS1149C0332R	. Washer	8	X	X	X	X	X	X	X
80	AN960C10L	. Washer (Alternate)	8	X	X	X	X	X	X	X
90	MS21044N3	. Nut	4	X	X	X	X	X	X	X
90	AN365-1032A	. Nut (Superseded by MS21044N3)	4	X	X	X	X	X	X	X
100	AN743-13	. Clip	2	X	X	X	X	X	X	X
110	AN832-4D	. Union	1	X	X	X	X	X	X	X
120	NAS1149F0763P	. Washer	1	X	X	X	X	X	X	X
120	AN960-716	. Washer (Alternate)	1	X	X	X	X	X	X	X
130	AN924-4W	. Nut	1	X	X	X	X	X	X	X
130	AN924-4D	. Nut (Superseded by AN924-4W)	1	X	X	X	X	X	X	X
140	28-18103-4	. Vent Air Static	1	X	X	X	X	X	X	X
–140A	28-18103-7	. Pitot Static Pressure	1	X	X	X	X	X	X	X
150	AN815-4	. Union	1	X	X	X	X	X	X	X
160	28-11120-1	. Pitot Tube Assembly	1	X	X	X	X	X	X	X
170	28-11121-7	. Stiffener	1	X	X	X	X	X	X	X
180	MS27039-0808	. Screw	4	X	X	X	X	X	X	X
180	AN525-832R8	. Screw (Superseded by MS27039-0808)	4	X	X	X	X	X	X	X
190	NAS1149FN832P	. Washer	4	X	X	X	X	X	X	X
190	AN960-8	. Washer (Alternate)	4	X	X	X	X	X	X	X
200	MS21083N08	. Nut	4	X	X	X	X	X	X	X
200	AN364-832A	. Nut (Superseded by MS21083N08)	4	X	X	X	X	X	X	X

UNCONTROLLED COPY WHEN DOWNLOADED OR PRINTED

Visit www.enstromhelicopter.com for instructions to order an original manual and to register for email notification updates.

FIGURE 11-11. PITOT STATIC SYSTEM INSTALLATION

ITEM NUMBER	PART NUMBER	DESCRIPTION	QTY PER ASSY	MODELS AFFECTED						
				F-28A	280	F-28C	280C	F-28F	280F	280FX
210	28-11121-4	. Silicone Tube	1	X	X	X	X	X	X	X
220	551-5	. Ty-Wrap	2	X	X	X	X	X	X	X
230	28-11121-901	. Pitot Pressure Line	1	X	X	X	X	X	X	X

Visit www.enstromhelicopter.com for instructions to order an original manual and to register for email notification updates.

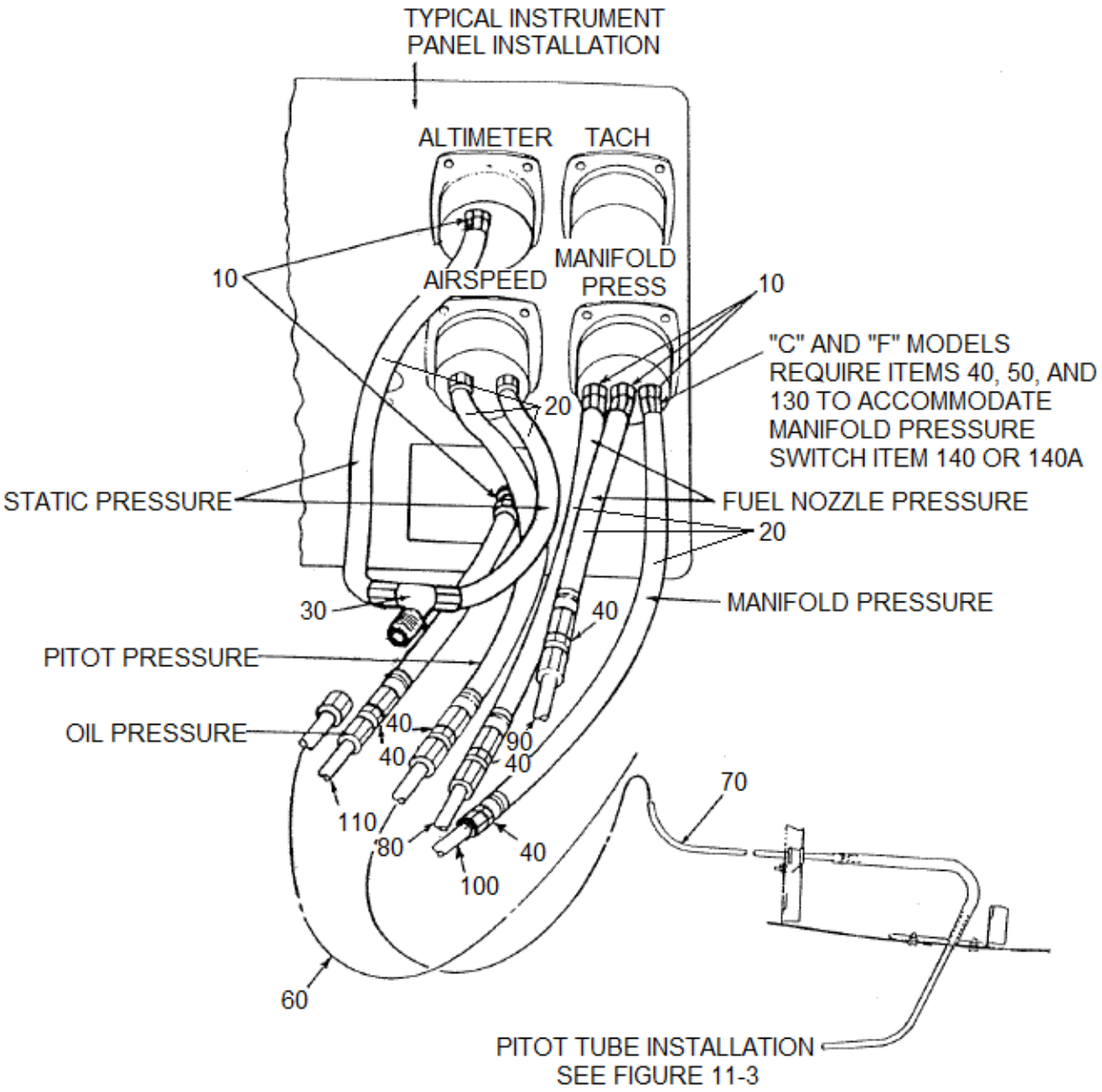

FIGURE 11-12. INSTRUMENT LINES CABIN AND PANEL

UNCONTROLLED COPY WHEN DOWNLOADED OR PRINTED

Visit www.enstromhelicopter.com for instructions to order an original manual and to register for email notification updates.

FIGURE 11-12. INSTRUMENT LINES CABIN AND PANEL

ITEM NUMBER	PART NUMBER	DESCRIPTION	QTY PER ASSY	MODELS AFFECTED						
				F-28A	280	F-28C	280C	F-28F	280F	280FX
10	AN816-4D	. Nipple	8	X	X	X	X	X	X	X
20	28-18061-1	. Hose Assembly	7	X	X	X	X	X	X	X
30	AN824-4D	. Flared Tee	1	X	X	X	X	X	X	X
40	AN815-4D	. Union	4	X	X	X	X	X	X	X
50	AN917-4D	. Internal Thread Tee	2	X	X	X	X	X	X	X
60	28-18104-907	. Static Pressure Line	1	X		X	X	X	X	X
–60A	280-181000-919	. Static Pressure Line	1		X	X	X	X	X	X
70	28-11121-901	. Pitot Pressure Line	1	X		X	X	X	X	X
–70A	280-181000-921	. Pitot Pressure Line	1		X	X	X	X	X	X
80	28-18104-906	. Fuel Pressure Line	1	X		X	X	X	X	X
–80A	280-181000-917	. Fuel Pressure Line	1		X	X	X	X	X	X
90	28-18104-904	. Fuel Vent Line	1	X		X	X	X	X	X
–90A	280-181000-913	. Fuel Vent Line	1		X	X	X	X	X	X
100	28-18104-905	. Manifold Pressure Line	1	X		X	X	X	X	X
–100A	280-181000-915	. Manifold Pressure Line	1		X	X	X	X	X	X
110	28-18104-903	. Oil Pressure Line	1	X		X	X	X	X	X
–110A	280-181000-911	. Oil Pressure Line	1		X	X	X	X	X	X
120	AN911-4D	. Nipple – Hex Shoulder	1			X	X	X	X	X
130	AN816-4D	. Fitting	1			X	X	X	X	X
140	ECD079-11	. Manifold Pressure Switch	1			X	X			
–140A	ECD078-11	. Manifold Pressure Switch	1					X	X	X

UNCONTROLLED COPY WHEN DOWNLOADED OR PRINTED

Visit www.enstromhelicopter.com for instructions to order an original manual and to register for email notification updates.

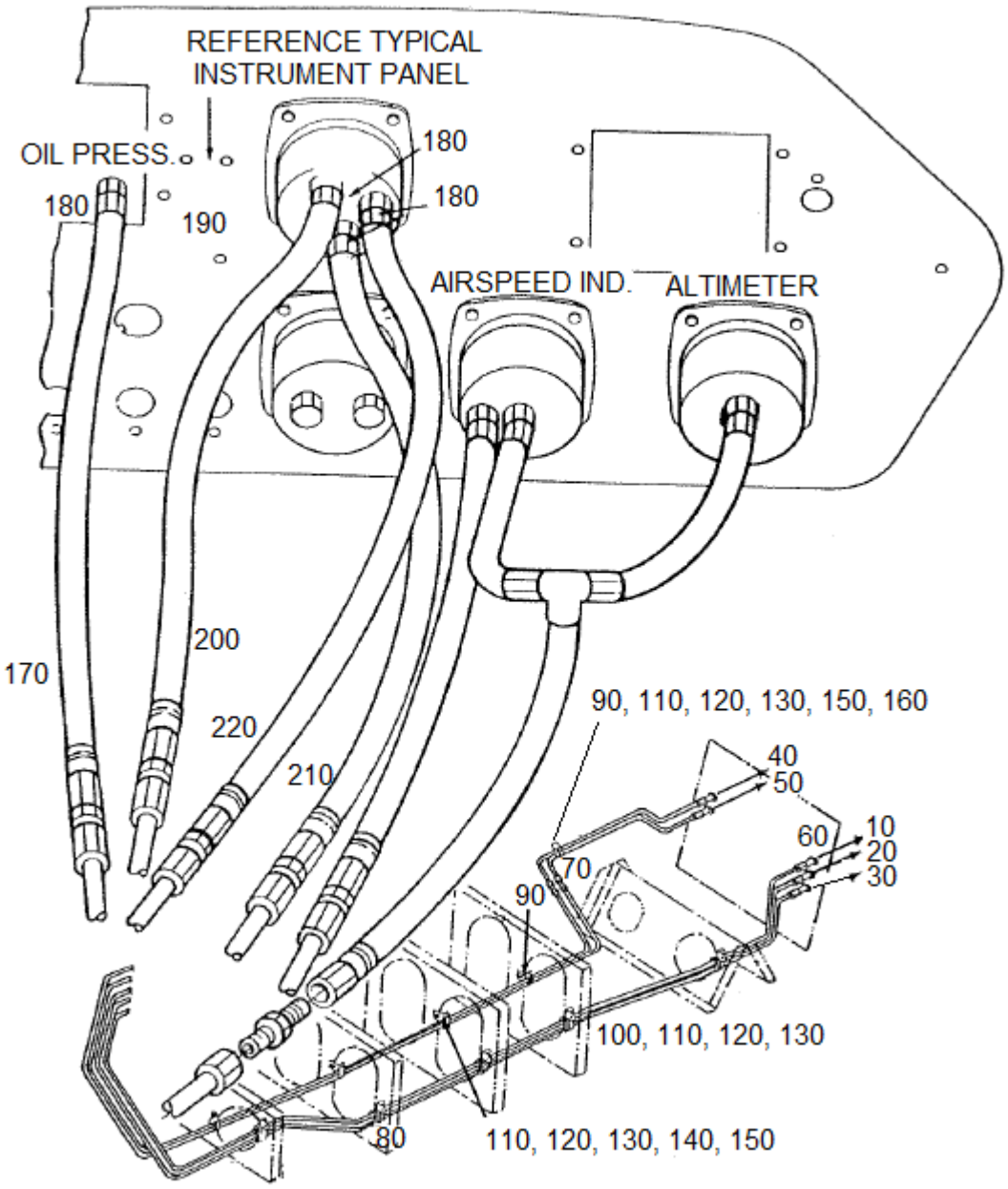

FIGURE 11-13. F-28A AND 280 INSTRUMENT LINES CABIN AND PANEL

Visit www.enstromhelicopter.com for instructions to order an original manual and to register for email notification updates.

FIGURE 11-13. F-28A AND 280 INSTRUMENT LINES CABIN AND PANEL

ITEM NUMBER	PART NUMBER	DESCRIPTION	QTY PER ASSY	MODELS AFFECTED						
				F-28A	280	F-28C	280C	F-28F	280F	280FX
10	28-18104-903	. Oil Pressure Line	1	X	X					
20	28-18104-904	. Fuel Vent Line	1	X	X					
30	28-18104-905	. Manifold Pressure Line	1	X	X					
40	28-18104-906	. Fuel Pressure Line	1	X	X					
50	28-18104-907	. Pitot Pressure Line	1	X	X					
60	AN833-4	. Bulkhead Union Fitting	5	X	X					
70	AN815-4D	. Union	2	X	X					
80	439-4-8-2-6	. Adel Clamp	6	X	X					
90	444-4-4-2-6	. Adel Clamp	4	X	X					
100	AN515-8R10	. Screw	9	X	X					
110	AN340-8	. Nut	19	X	X					
120	AN960-8L	. Washer	31	X	X					
130	AN935-8	. Lock Washer	19	X	X					
140	AN743-13	. Bracket	9	X	X					
150	AN515-8R16	. Screw	10	X	X					
160	28-12400-12	. Spacer	1	X	X					
170	28-18061-1	. Oil Pressure Line Aero-Quip	1	X	X					
180	AN816-4D	. Coupling	5	X	X					
–*	49726	. Hobbs Switch	1	X	X					
–*	AN917-1D	. Fitting “T”	1	X	X					
190	AN911-1D	. Fitting	1	X	X					
200	28-18061-1	. Fuel Nozzle Pressure Line	1	X	X					
210	28-18061-1	. Manifold Pressure Line	1	X	X					
220	28-18061-1	. Fuel Nozzle Pressure Reference Line	1	X	X					

NOTE: Information contained herein represents components as installed at the time of manufacture.

* Optional equipment.

UNCONTROLLED COPY WHEN DOWNLOADED OR PRINTED

Visit www.enstromhelicopter.com for instructions to order an original manual and to register for email notification updates.

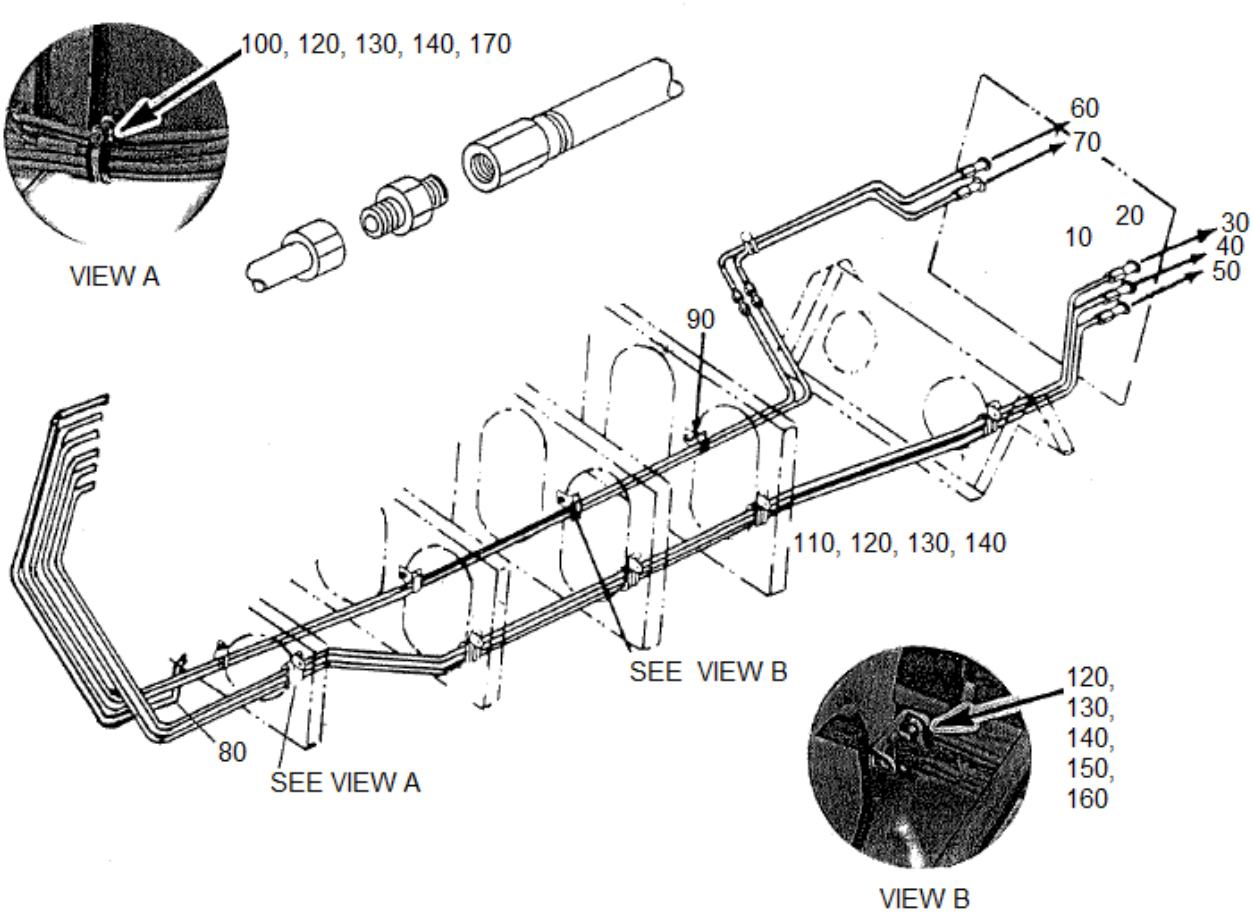

FIGURE 11-14. INSTRUMENT LINE INSTALLATION

UNCONTROLLED COPY WHEN DOWNLOADED OR PRINTED

Visit www.enstromhelicopter.com for instructions to order an original manual and to register for email notification updates.

FIGURE 11-14. INSTRUMENT LINE INSTALLATION

ITEM NUMBER	PART NUMBER	DESCRIPTION	QTY PER ASSY	MODELS AFFECTED						
				F-28A	280	F-28C	280C	F-28F	280F	280FX
10	AN833-4	. Bulkhead Elbow	5	X	X	X	X	X	X	X
20	AN924-4	. Nut	5	X	X	X	X	X	X	X
30	28-18104-3	. Oil Pressure Line	1	X						
–30A	280-181000-911	. Oil Pressure Line	1		X	X	X	X	X	X
40	28-18104-4	. Fuel Vent Line	1	X						
–40A	280-181000-13	. Fuel Vent Line	1		X	X	X	X	X	X
50	28-18104-5	. Manifold Pressure Line	1	X						
–50A	280-181000-915	. Manifold Pressure Line	1		X	X	X	X	X	X
60*	28-18104-6	. Fuel Pressure Line Assembly	1	X						
–60A*	280-181000-917	. Fuel Pressure Line Assembly	1		X	X	X	X	X	X
70*	28-18104-7	. Static Pressure Line Assembly	1	X						
–70A*	280-181000-919	. Static Pressure Line Assembly	1		X	X	X	X	X	X
80	28-11121-4	. Pitot Pressure Line	1	X						
–80A	280-181000-921	. Pitot Pressure Line	1		X	X	X	X	X	X
90	444-4-4-2-6	. Adel Clamp	A/R	X	X	X	X	X	X	X
100	28-18033-1	. Spacer	A/R	X	X	X	X	X	X	X
110	MS35206-249	. Screw	A/R	X	X	X	X	X	X	X
110	AN515-8-16	. Screw (Superseded by MS35206-249)	A/R	X	X	X	X	X	X	X
120	NAS1149FN816P	. Washer	A/R	X	X	X	X	X	X	X
120	AN960-8L	. Washer (Alternate)	A/R	X	X	X	X	X	X	X
130	MS35338-42	. Locker Washer	A/R	X	X	X	X	X	X	X
130	AN935-8	. Lock Washer (Alternate)	A/R	X	X	X	X	X	X	X
140	MS35649-282	. Nut	A/R	X	X	X	X	X	X	X
140	AN340-8	. Nut (Superseded by MS35649-282)	A/R	X	X	X	X	X	X	X
150	AN743-13	. Bracket – Support	A/R	X	X	X	X	X	X	X
–	439-4-8-2-6	. Adel Clamp	A/R	X	X	X	X	X	X	X
–	AN515-8-10	. Screw	A/R	X	X	X	X	X	X	X

UNCONTROLLED COPY WHEN DOWNLOADED OR PRINTED

Visit www.enstromhelicopter.com for instructions to order an original manual and to register for email notification updates.

FIGURE 11-14. INSTRUMENT LINE INSTALLATION

ITEM NUMBER	PART NUMBER	DESCRIPTION	QTY PER ASSY	MODELS AFFECTED						
				F-28A	280	F-28C	280C	F-28F	280F	280FX
160	AN515-8-8	. Screw	A/R	X	X	X	X	X	X	X
–	MS21919CJ15	. Clamp	A/R	X	X	X	X	X	X	X
–	MS21919-DG-15	. Clamp (Superseded by MS51919CJ15)	A/R	X	X	X	X	X	X	X
170	AN515-8-20	. Screw	A/R	X						
–	MS35206-251	. Screw	A/R		X	X	X	X	X	X
–	AN515-8-24	. Screw (Superseded by MS35206-251)	A/R		X	X	X	X	X	X

* Complete line assembly with AN815-4D included in F-28C2 models get 280 model parts.

UNCONTROLLED COPY WHEN DOWNLOADED OR PRINTED

Visit www.enstromhelicopter.com for instructions to order an original manual and to register for email notification updates.

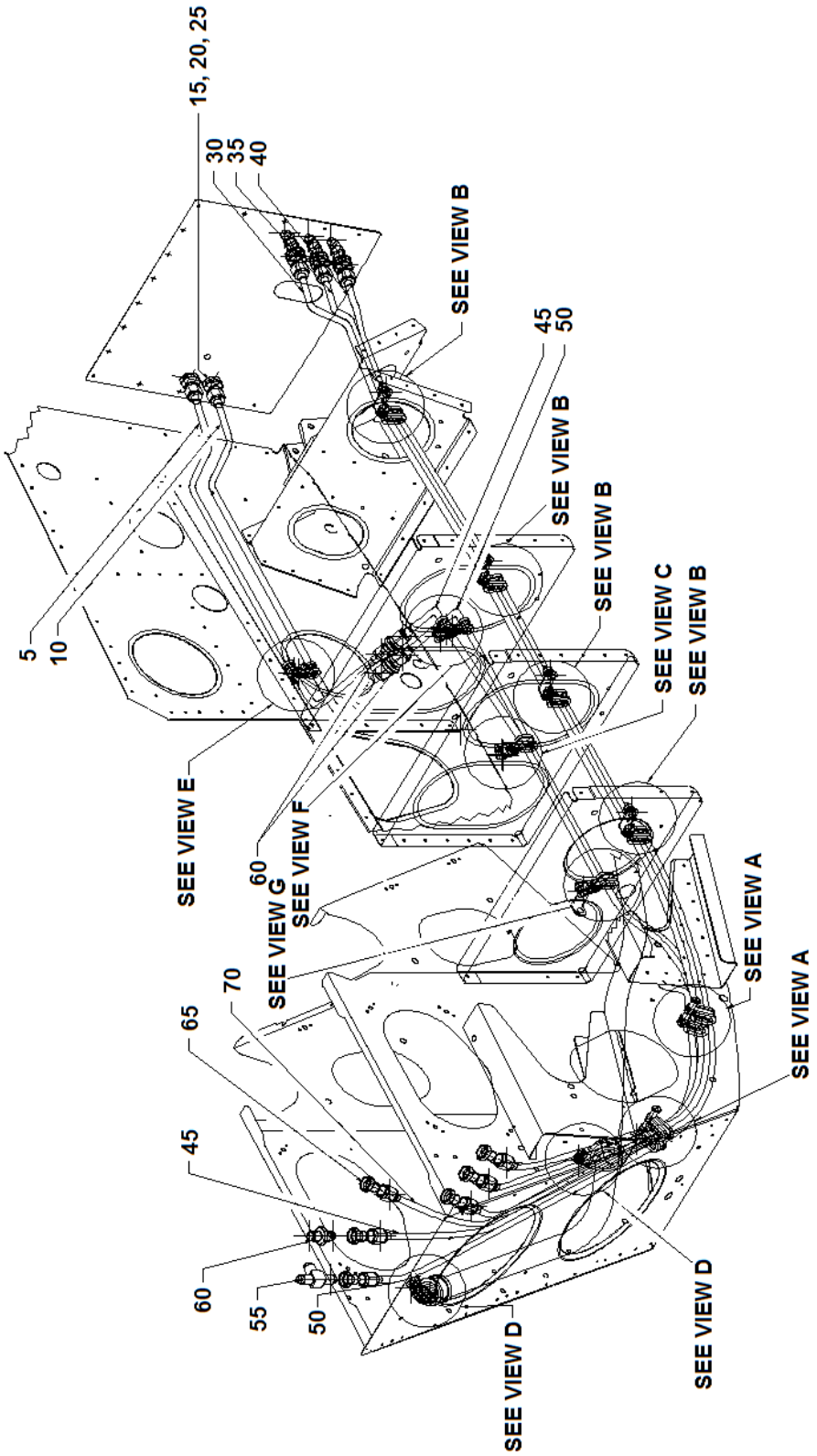

Sheet 1 of 2

FIGURE 11-15. INSTRUMENT/SYSTEM LINE INSTALLATION

UNCONTROLLED COPY WHEN DOWNLOADED OR PRINTED

Visit www.enstromhelicopter.com for instructions to order an original manual and to register for email notification updates.

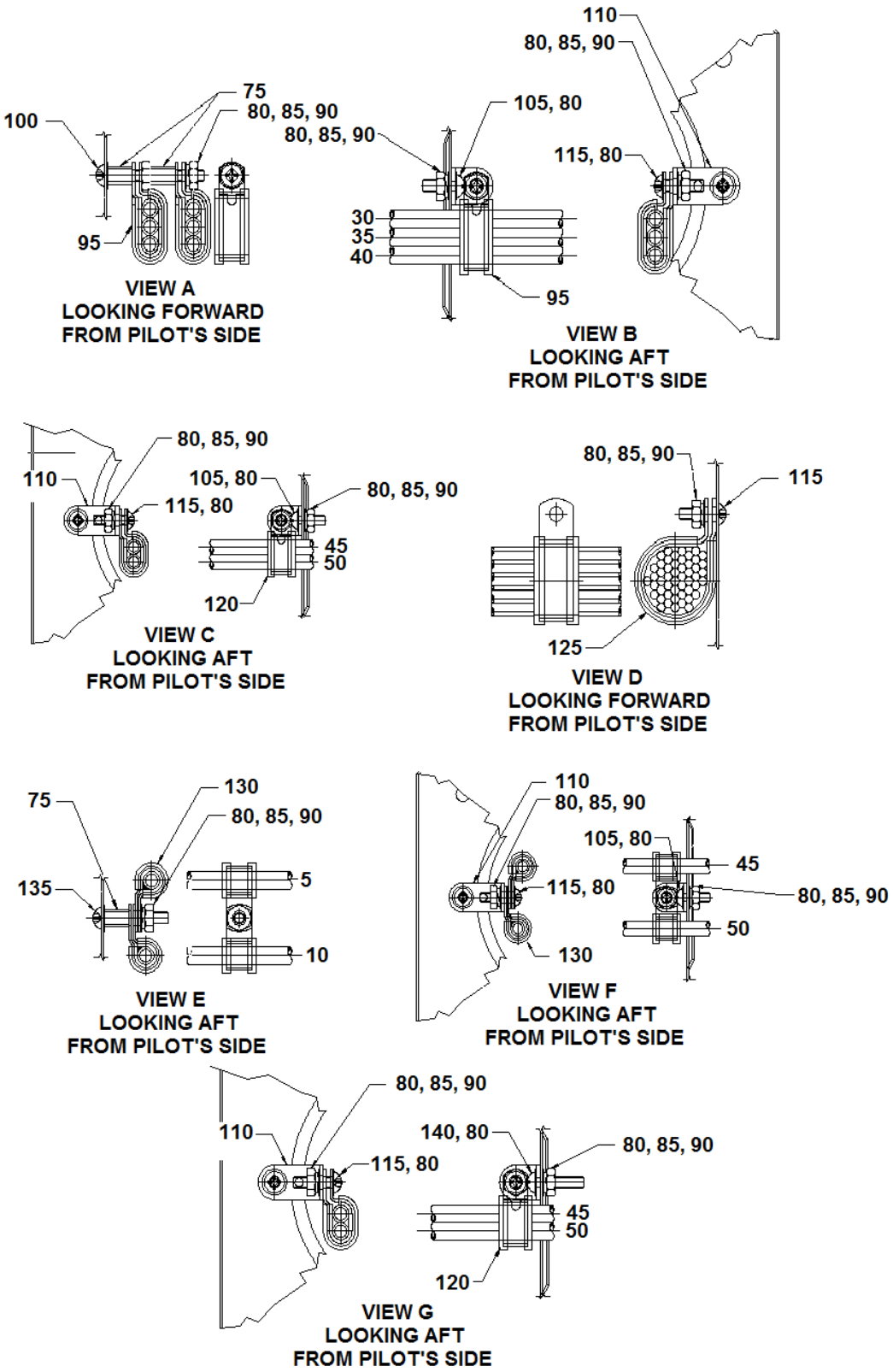

Sheet 2 of 2

FIGURE 11-15. INSTRUMENT/SYSTEM LINE INSTALLATION

Visit www.enstromhelicopter.com for instructions to order an original manual and to register for email notification updates.

FIGURE 11-15. INSTRUMENT/SYSTEM LINE INSTALLATION

ITEM NUMBER	PART NUMBER	DESCRIPTION	QTY PER ASSY	MODELS AFFECTED						
				F-28A	280	F-28C	280C	F-28F	280F	280FX
–	280-181000-1	Vent Line Installation	REF			X	X	X	X	X
5	280-181000-17	. Fuel Pressure Tube	1			X	X	X	X	X
–	AN818-4D	. Nut	2			X	X	X	X	X
–	MS20819-4D	. Sleeve	2			X	X	X	X	X
–	28-12473-11	. Placard (FUEL)	2			X	X	X	X	X
10	280-181000-19	. Static Pressure Tube	1			X	X	X	X	X
–	AN818-4D	. Nut	2			X	X	X	X	X
–	MS20819-4D	. Sleeve	2			X	X	X	X	X
–	28-12470-11	. Placard (STATIC PRESSURE)	2			X	X	X	X	X
15	AN833-4D	. Union Elbow	5			X	X	X	X	X
20	NAS1149F0763P	. Washer	10			X	X	X	X	X
25	AN924-4	. Nut	5			X	X	X	X	X
30	280-181000-11	. Oil Pressure Tube	1			X	X	X	X	X
–	AN818-4D	. Nut	2			X	X	X	X	X
–	MS20819-4D	. Sleeve	2			X	X	X	X	X
–	28-12474-11	. Placard (LUBRICATION)	2			X	X	X	X	X
35	280-181000-13	. Static Fuel Tube	1			X	X	X	X	X
–	AN818-4D	. Nut	2			X	X	X	X	X
–	MS20819-4D	. Sleeve	2			X	X	X	X	X
–	28-12475-11	. Placard (FUEL STATIC PRESSURE)	2			X	X	X	X	X
40	280-181000-15	. Manifold Pressure Tube	1			X	X	X	X	X
–	AN818-4D	. Nut	2			X	X	X	X	X
–	MS20819-4D	. Sleeve	2			X	X	X	X	X
–	28-12471-11	. Placard (MANIFOLD PRESSURE)	2			X	X	X	X	X
45	280-181000-23	. Fuel Pressure Tube	1			X	X	X	X	X
–	AN818-4D	. Nut	2			X	X	X	X	X

UNCONTROLLED COPY WHEN DOWNLOADED OR PRINTED

Visit www.enstromhelicopter.com for instructions to order an original manual and to register for email notification updates.

FIGURE 11-15. INSTRUMENT/SYSTEM LINE INSTALLATION

ITEM NUMBER	PART NUMBER	DESCRIPTION	QTY PER ASSY	MODELS AFFECTED						
				F-28A	280	F-28C	280C	F-28F	280F	280FX
–	MS20819-4D	. Sleeve	2			X	X	X	X	X
–	28-12473-11	. Placard (FUEL)	2			X	X	X	X	X
50	280-181000-25	. Static Pressure Tube	1			X	X	X	X	X
–	AN818-4D	. Nut	2			X	X	X	X	X
–	MS20819-4D	. Sleeve	2			X	X	X	X	X
–	28-12470-11	. Placard (STATIC PRESSURE)	2			X	X	X	X	X
55	AN824-4D	. Tee	1			X	X	X	X	X
60	AN815-4D	. Union	7			X	X	X	X	X
65	NO NUMBER	. Protective Cap/Plug	6			X	X	X	X	X
70	280-181000-21	. Air Speed Tube	1			X	X	X	X	X
–	AN818-4D	. Nut	1			X	X	X	X	X
–	MS20819-4D	. Sleeve	1			X	X	X	X	X
–	28-12472-11	. Placard (AIRSPEED)	2			X	X	X	X	X
75	28-18033-11	. Spacer	5			X	X	X	X	X
80	NAS1149FN816P	. Washer	36			X	X	X	X	X
85	MS35338-42	. Lock Washer	19			X	X	X	X	X
90	MS35649-282	. Nut	21			X	X	X	X	X
95	439-4-8-2-6	. Clamp	8			X	X	X	X	X
100	MS35206-251	. Screw	2			X	X	X	X	X
105	MS35206-245	. Screw	6			X	X	X	X	X
110	AN743-13	. Bracket	7			X	X	X	X	X
115	MS35206-246	. Screw	9			X	X	X	X	X
120	444-4-2-6	. Clamp	2			X	X	X	X	X
125	MS21919WDG15	. Clamp	2			X	X	X	X	X
130	MS21919WF4	. Clamp	4			X	X	X	X	X
135	MS35206-249	. Screw	1			X	X	X	X	X

UNCONTROLLED COPY WHEN DOWNLOADED OR PRINTED

Visit www.enstromhelicopter.com for instructions to order an original manual and to register for email notification updates.

FIGURE 11-15. INSTRUMENT/SYSTEM LINE INSTALLATION

ITEM NUMBER	PART NUMBER	DESCRIPTION	QTY PER ASSY	MODELS AFFECTED						
				F-28A	280	F-28C	280C	F-28F	280F	280FX
140	MS35206-247	. Screw	1			X	X	X	X	X

UNCONTROLLED COPY WHEN DOWNLOADED OR PRINTED
Visit www.enstromhelicopter.com for instructions to order an original manual and to register for email notification updates.

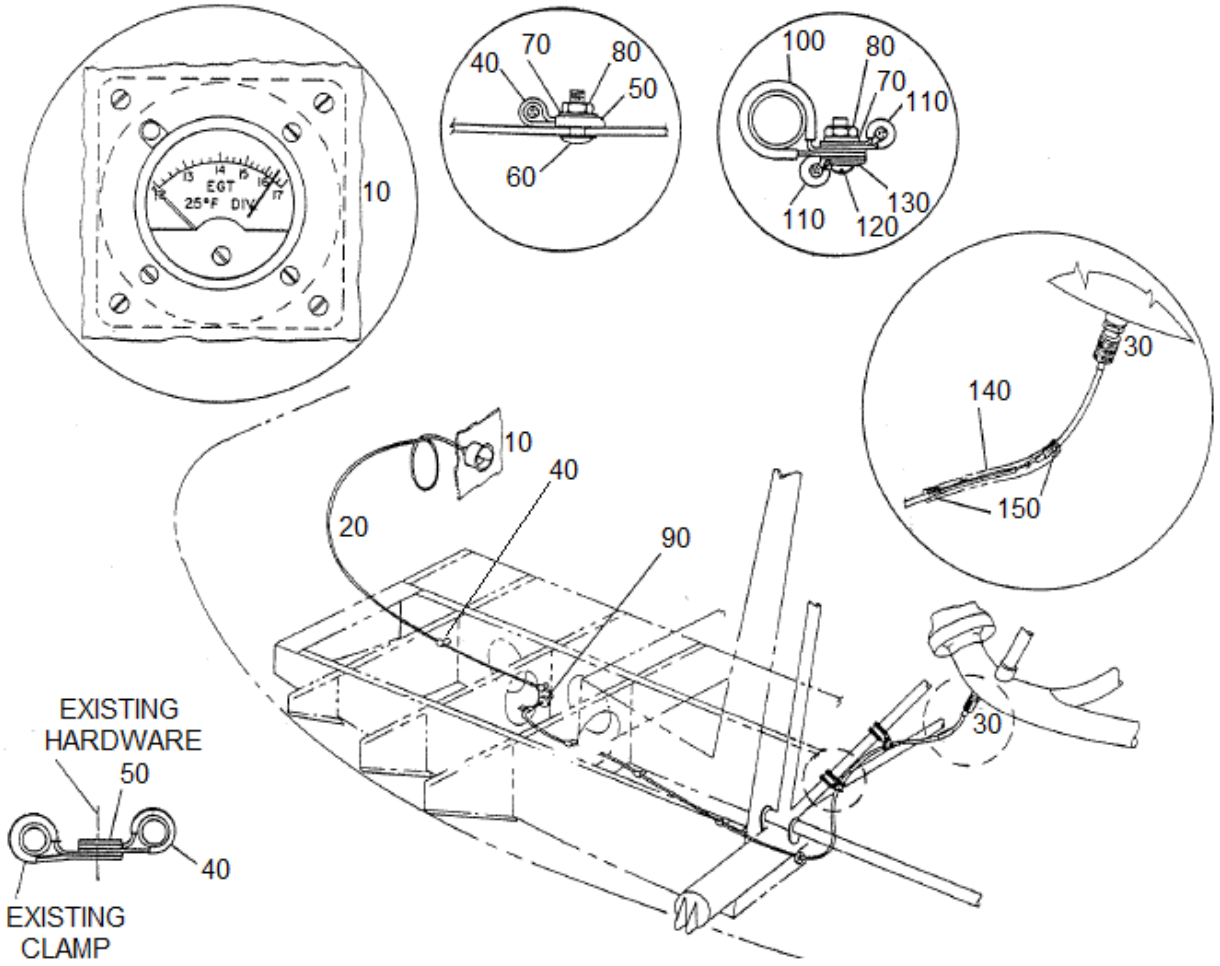

FIGURE 11-16. TURBINE INLET TEMPERATURE INDICATOR INSTALLATION

UNCONTROLLED COPY WHEN DOWNLOADED OR PRINTED
Visit www.enstromhelicopter.com for instructions to order an original manual and to register for email notification updates.

FIGURE 11-16. TURBINE INLET TEMPERATURE INDICATOR INSTALLATION

ITEM NUMBER	PART NUMBER	DESCRIPTION	QTY PER ASSY	MODELS AFFECTED						
				F-28A	280	F-28C	280C	F-28F	280F	280FX
10	202A-13BTR	. Gauge	1			X	X	X	X	X
20	MC1-106-140	. Extension Lead	1			X	X	X	X	X
30	MC1-A106B	. Probe Assembly	1			X	X	X	X	X
40	CCH25-S10	. Clamp	6			X	X	X	X	X
40	1/4-6NA	. Clamp (Superseded by CCH25-S10)	6			X	X	X	X	X
50	DG-167	. D Washer	6			X	X	X	X	X
60	MS27039-808	. Screw	4			X	X	X	X	X
60	AN525-832R8	. Screw (Superseded by MS27039-808)	4			X	X	X	X	X
70	MS35338-42	. Lock Washer	6			X	X	X	X	X
70	AN935-8	. Lock Washer (Alternate)	6			X	X	X	X	X
80	MS35649-282	. Nut	6			X	X	X	X	X
80	AN340-8	. Nut (Superseded by MS25649-282)	6			X	X	X	X	X
90	MS35489-6	. Grommet	3			X	X	X	X	X
90	AN931-4-7	. Grommet (Superseded by MS35489-6)	3			X	X	X	X	X
100	MS21919DF-12	. Clamp	2			X	X	X	X	X
110	MS21919DF-3	. Clamp	2			X	X	X	X	X
120	MS35206-246	. Screw	2			X	X	X	X	X
120	AN515-8R10	. Screw (Superseded by MS35206-246)	2			X	X	X	X	X
130	NAS1149FN816P	. Washer	4			X	X	X	X	X
130	AN960-8L	. Washer (Alternate)	4			X	X	X	X	X
140	28-181005-13	. Sleeve	1			X	X	X	X	X
150	CBR3S-M	. Cable Tie	2			X	X	X	X	X
150	SST2S-MP	. Cable Tie (Alternate)	2			X	X	X	X	X

UNCONTROLLED COPY WHEN DOWNLOADED OR PRINTED

Visit www.enstromhelicopter.com for instructions to order an original manual and to register for email notification updates.

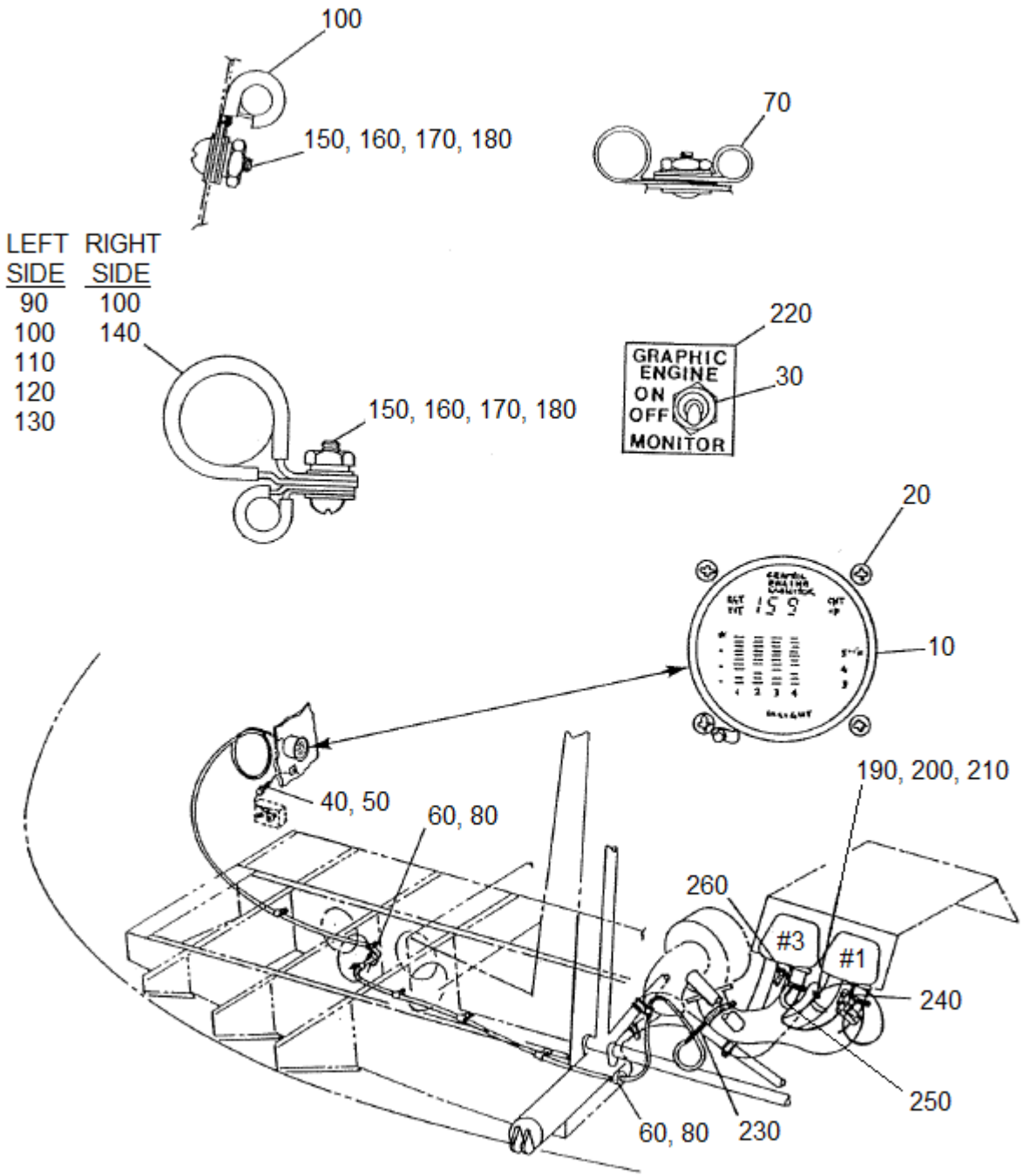

FIGURE 11-17. GRAPHIC ENGINE MONITOR

UNCONTROLLED COPY WHEN DOWNLOADED OR PRINTED

Visit www.enstromhelicopter.com for instructions to order an original manual and to register for email notification updates.

FIGURE 11-17. GRAPHIC ENGINE MONITOR

ITEM NUMBER	PART NUMBER	DESCRIPTION	QTY PER ASSY	MODELS AFFECTED						
				F-28A	280	F-28C	280C	F-28F	280F	280FX
–	28-01026-3	Graphic Engine Monitor (GEM 610) Kit	REF					X	X	X
10	GEM 610	. Graphic Engine Monitor	1					X	X	X
20	AN515-6R3	. Screw	4					X	X	X
30	7101SYZQE	. Switch	1					X	X	X
30	MS75028-22	. Switch (Superseded by 7101SYZQE)	1					X	X	X
40	HHJ-A	. Fuse Holder – Inline	1					X	X	X
50	3AG-1A	. Fuse	1					X	X	X
60	MS35489-11	. Grommet	3					X	X	X
60	AN931-6-10	. Grommet (Superseded by MS35489-11)	3					X	X	X
70	CCH25-S10	. Clamp	6					X	X	X
80	MS35489-6	. Grommet	3					X	X	X
80	AN931-4-7	. Grommet (Superseded by MS35489-6)	3					X	X	X
90	MS21919WCJ3	. Clamp	1					X	X	X
90	MS21919DG3	. Clamp Superseded by MS21919WCJ3)	1					X	X	X
100	MS21919WCJ4	. Clamp	8					X	X	X
100	MS21919F4	. Clamp (Superseded by MS21919WCJ4)	8					X	X	X
110	MS21919WCJ6	. Clamp	1					X	X	X
110	MS21919F6	. Clamp (Superseded by MS21919WCJ6)	1					X	X	X
120	MS21919WCJ10	. Clamp	1					X	X	X
120	MS21919F10	. Clamp (Superseded by MS21919WCJ10)	1					X	X	X
130	MS21919WCJ12	. Clamp	2					X	X	X
130	MS21919DF12	. Clamp (Superseded by MS21919WCJ12)	2					X	X	X
140	MS21919WCJ16	. Clamp	1					X	X	X

UNCONTROLLED COPY WHEN DOWNLOADED OR PRINTED

Visit www.enstromhelicopter.com for instructions to order an original manual and to register for email notification updates.

FIGURE 11-17. GRAPHIC ENGINE MONITOR

ITEM NUMBER	PART NUMBER	DESCRIPTION	QTY PER ASSY	MODELS AFFECTED						
				F-28A	280	F-28C	280C	F-28F	280F	280FX
140	MS21919DF16	. Clamp (Superseded by MS21919WCJ16)	1					X	X	X
150	MS35206-245	. Screw	12					X	X	X
150	AN515-8R8	. Screw (Superseded by MS35206-245)	12					X	X	X
160	NAS1149FN816P	. Washer	2					X	X	X
160	AN960-8L	. Washer (Alternate)	2					X	X	X
170	MS35338-42	. Lock Washer	12					X	X	X
170	AN935-8	. Lock Washer (Alternate)	12					X	X	X
180	MS35649-282	. Nut	12					X	X	X
180	AN340-832	. Nut (Superseded by MS35649-282)	12					X	X	X
190	CBR1M-M	. Cable Tie	30					X	X	X
190	CBR2M-M	. Cable Tie (Alternate)	30					X	X	X
190	SST1M-MP	. Cable Tie (Alternate)	30					X	X	X
200	CBR3I-M	. Cable Tie	10					X	X	X
200	CBR1.5I-M	. Cable Tie (Alternate)	10					X	X	X
200	SST1.5I-MP	. Cable Tie (Alternate)	10					X	X	X
210	CBR3S-M	. Cable Tie	10					X	X	X
210	SST2S-MP	. Cable Tie (Alternate)	10					X	X	X
–	LW-18959-175-34	. Clamp	6					X	X	X
–	28-01026-11	. Sleeve	A/R					X	X	X
220	28-22543-11	. Placard- Switch	1					X	X	X
230	2871	. Turbo Inlet Temperature Probe	1					X	X	X
240	2852	. Cylinder Head Temperature Probe	3					X	X	X
250	2870	. Exhaust Gas Temperature Probe	4					X	X	X
260	2855	. Dual Cylinder Head Temperature Probe	1					X	X	X

UNCONTROLLED COPY WHEN DOWNLOADED OR PRINTED

Visit www.enstromhelicopter.com for instructions to order an original manual and to register for email notification updates.

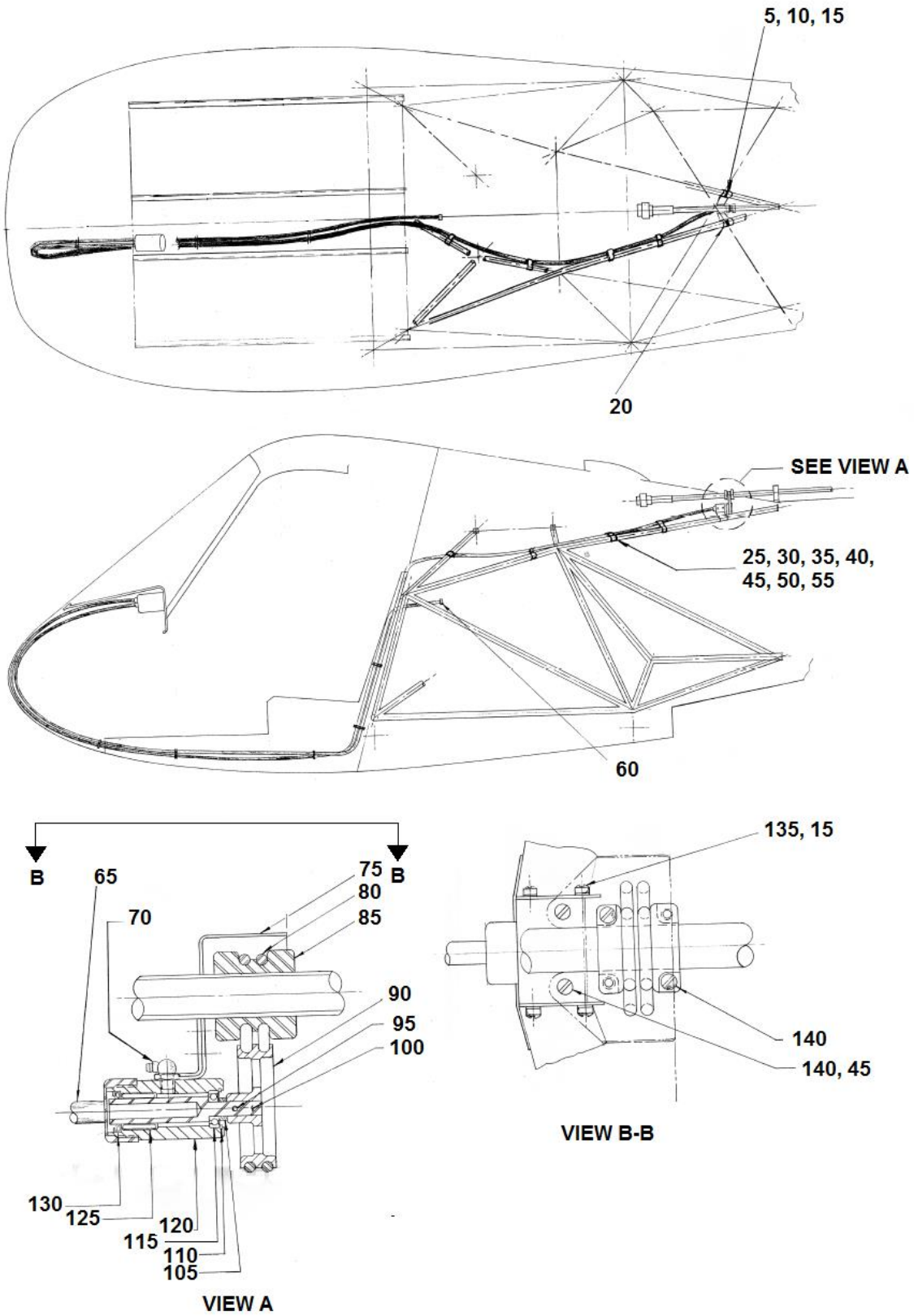

FIGURE 11-18. MECHANICAL TACHOMETER DRIVE INSTALLATION

UNCONTROLLED COPY WHEN DOWNLOADED OR PRINTED
Visit www.enstromhelicopter.com for instructions to order an original manual and to register for email notification updates.

FIGURE 11-18. MECHANICAL TACHOMETER DRIVE INSTALLATION

ITEM NUMBER	PART NUMBER	DESCRIPTION	QTY PER ASSY	MODELS AFFECTED						
				F-28A	280	F-28C	280C	F-28F	280F	280FX
–	28-18020-1	Mechanical Tachometer Drive Installation	REF			X	X	X	X	X
–	28-18020-5	Tachometer Assembly	REF			X	X	X	X	X
–	28-18020-7	Tachometer Bracket Assembly	REF			X	X	X	X	X
5	AN3-11A	. Bolt, Machined	4			X	X	X	X	X
10	AN365-1032A	. Nut	4			X	X	X	X	X
15	AN960-10	. Washer	12			X	X	X	X	X
20	28-18028-1	. Bracket	1			X	X	X	X	X
25	MS21919WDG-5	. Clamp	4			X	X	X	X	X
30	MS21919WDG-14	. Clamp	3			X	X	X	X	X
35	MS21919WDG-12	. Clamp	1			X	X	X	X	X
40	AN515-8-R8	. Screw	4			X	X	X	X	X
45	AN960-8	. Washer	A/R			X	X	X	X	X
50	AN340-832	. Nut	4			X	X	X	X	X
55	AN935-8	. Lock Washer	4			X	X	X	X	X
60	ECD108-1	. Engine Tach Cable	1			X	X	X	X	X
65	ECD108-3	. Rotor Tach Cable	1			X	X	X	X	X
70	1911-B1	. Alemite Fitting	1			X	X	X	X	X
75	28-18031-3	. Pulley Weather Guard	1			X	X	X	X	X
80	NAS1611-333A	. O-Ring	2			X	X	X	X	X
85	28-18027-1	. Driver Pulley	1			X	X	X	X	X
90	28-18030-1	. Driven Pulley	1			X	X	X	X	X
95	79-012-062-0500	. Roll Pin	1			X	X	X	X	X
100	28-18024-5	. Drive Shaft Assembly	1			X	X	X	X	X
105	28-18034-1	. Spacer	1			X	X	X	X	X
110	N5000-62-PP	. Retaining Ring	1			X	X	X	X	X
115	ECD066-1	. Bearing	1			X	X	X	X	X
120	28-18026-3	. Output Housing	1			X	X	X	X	X

UNCONTROLLED COPY WHEN DOWNLOADED OR PRINTED

Visit www.enstromhelicopter.com for instructions to order an original manual and to register for email notification updates.

FIGURE 11-18. MECHANICAL TACHOMETER DRIVE INSTALLATION

ITEM NUMBER	PART NUMBER	DESCRIPTION	QTY PER ASSY	MODELS AFFECTED						
				F-28A	280	F-28C	280C	F-28F	280F	280FX
125	B-710	. Needle Bearing	1			X	X	X	X	X
130	1886	. Type TC Oil Seal	1			X	X	X	X	X
130	B44-28-2	. Type B Oil Seal (Alternate)	1			X	X	X	X	X
135Δ	NK501-10-6	. Screw	4			X	X	X	X	X
140♦	NK500-8-A/R	. Screw	A/R			X	X	X	X	X

Δ NP501-10() screws are an acceptable alternate for NK501-10() screws.

♦ NP500-8() screws are an acceptable alternate for NK500-8() screws.

UNCONTROLLED COPY WHEN DOWNLOADED OR PRINTED

Visit www.enstromhelicopter.com for instructions to order an original manual and to register for email notification updates.

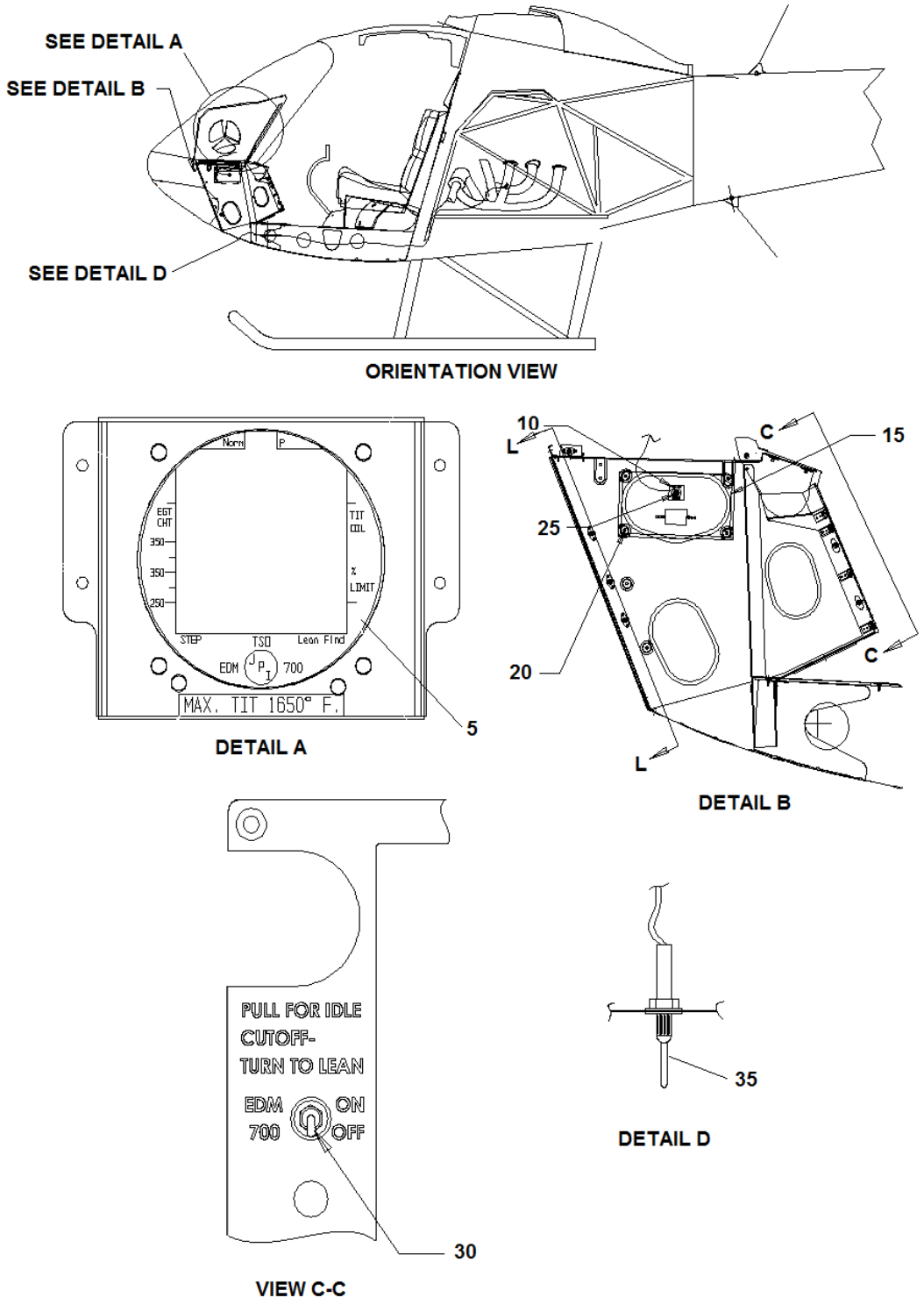

See Figure 11-8 Sheet 1 for
F-28F and 280FX Instruments and Instrument Panel.

Sheet 1 of 4

FIGURE 11-19. EDM-700-4C INSTALLATION

UNCONTROLLED COPY WHEN DOWNLOADED OR PRINTED

Visit www.enstromhelicopter.com for instructions to order an original manual and to register for email notification updates.

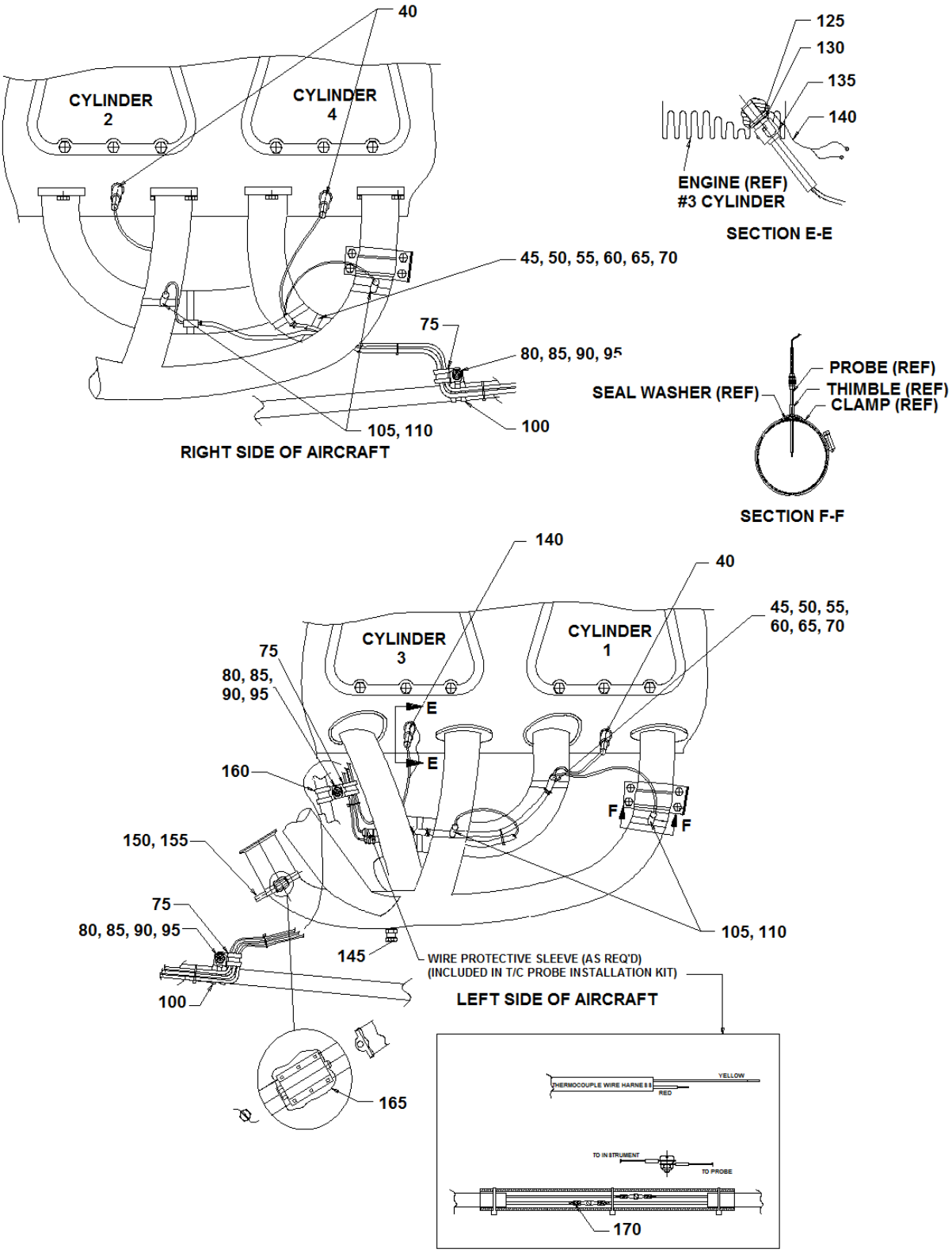

Sheet 2 of 4

FIGURE 11-19. EDM-700-4C INSTALLATION

Visit www.enstromhelicopter.com for instructions to order an original manual and to register for email notification updates.

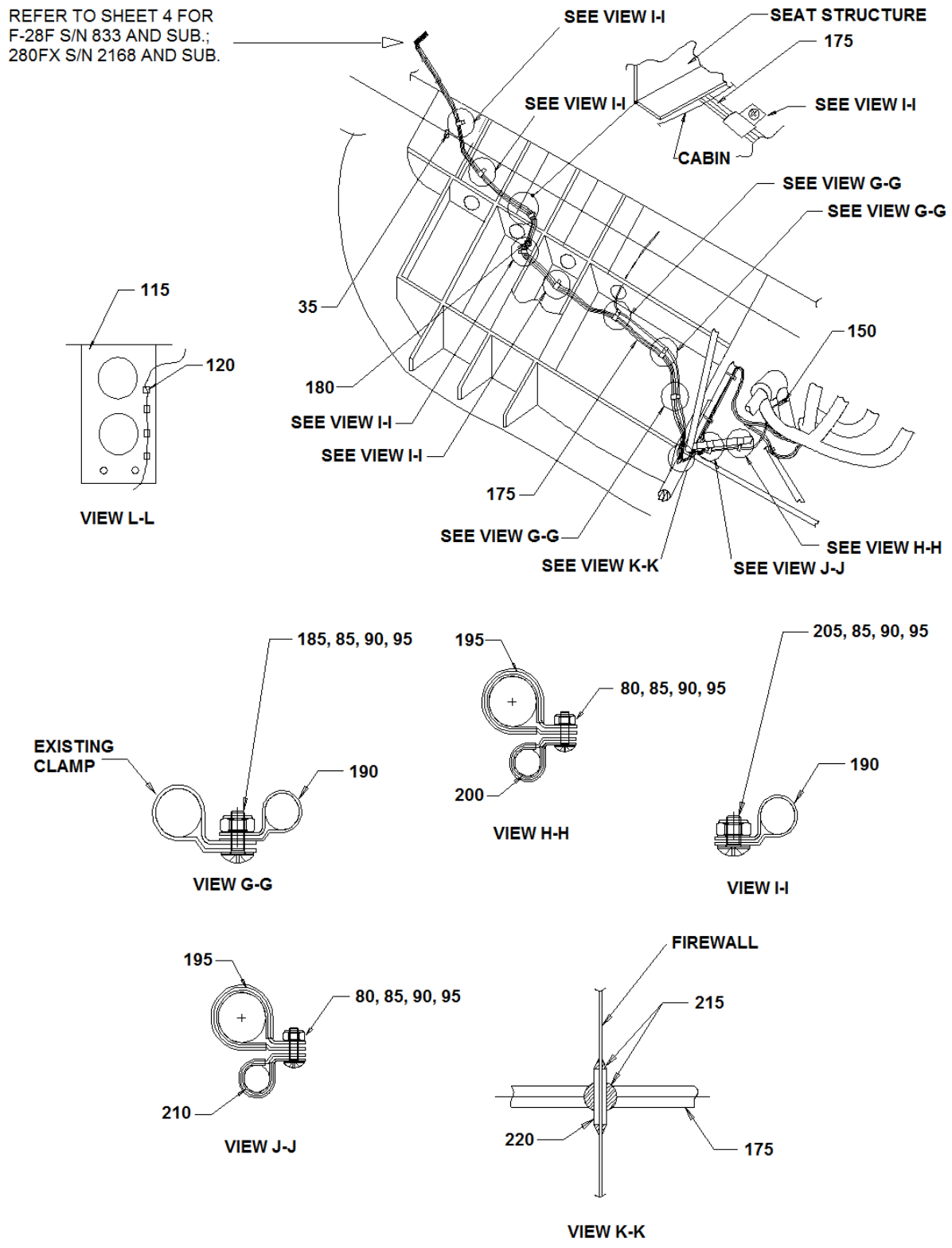

Sheet 3 of 4

FIGURE 11-19. EDM-700-4C INSTALLATION

UNCONTROLLED COPY WHEN DOWNLOADED OR PRINTED

Visit www.enstromhelicopter.com for instructions to order an original manual and to register for email notification updates.

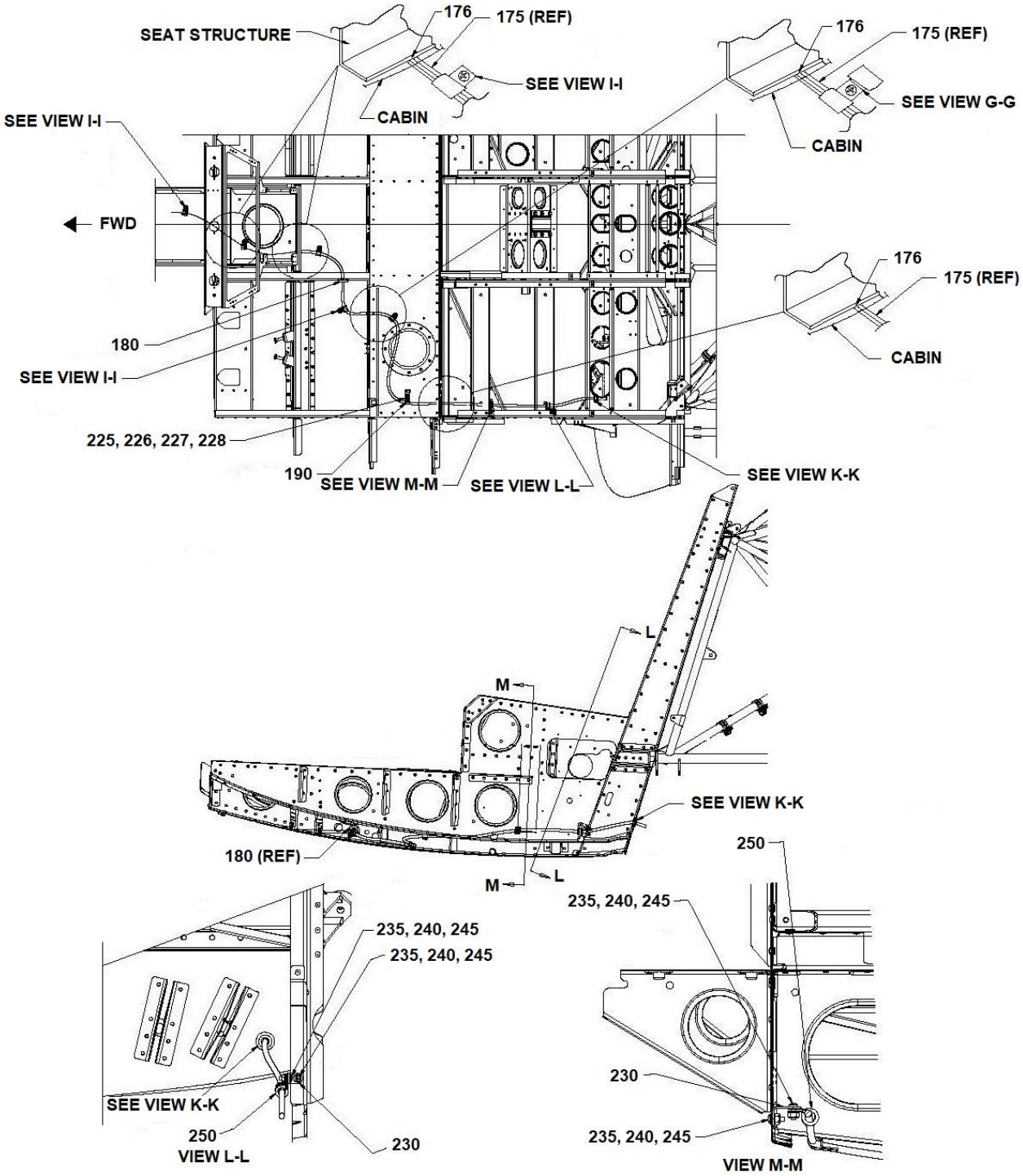

F-28F S/N 833 AND SUBSEQUENT; 280FX S/N 2168 AND SUBSEQUENT

Sheet 4 of 4

FIGURE 11-19. EDM-700-4C INSTALLATION

UNCONTROLLED COPY WHEN DOWNLOADED OR PRINTED

Visit www.enstromhelicopter.com for instructions to order an original manual and to register for email notification updates.

FIGURE 11-19. EDM-700-4C INSTALLATION

ITEM NUMBER	PART NUMBER	DESCRIPTION	QTY PER ASSY	MODELS AFFECTED						
				F-28A	280	F-28C	280C	F-28F	280F	280FX
–	28-22093-3	EDM-700-4C Installation	REF			X	X	X	X	X
5●	EGT-701-4C-A-T	. Indicator w/Software Pt# 302661-REV 3.062	1			X	X	X	X	X
10	28-22540-19	. Placard (DATA PORT EDM-700)	1			X	X	X	X	X
15	28-18167-5	. Accessory Panel Assembly	1			X	X	X	X	X
20	6 X 3/8	. Screw	4			X	X	X	X	X
25●	700200	. Harness (P1)	1			X	X	X	X	X
30*	7101SYZQE	. Switch	1			X	X	X	X	X
35●	400510	. OAT Probe w/Harness	1			X	X	X	X	X
40●	M-5050T	. CHT Probe	3			X	X	X	X	X
45	AN526-632R12	. Screw	6			X	X	X	X	X
50	NAS1149FN616P	. Washer	6			X	X	X	X	X
55	MS35338-41	. Lock Washer	6			X	X	X	X	X
60	MS35649-262	. Nut	6			X	X	X	X	X
65	LW-18959-175-34	. Clamp	6			X	X	X	X	X
70	28-01026-11	. Sleeve	6			X	X	X	X	X
75	S500-4	. Clamp	3			X	X	X	X	X
–	608036-1	. Tape	A/R			X	X	X	X	X
80	MS35206-245	. Screw	9			X	X	X	X	X
85	NAS1149FN816P	. Washer	23			X	X	X	X	X
90	MS35338-42	. Lock Washer	10			X	X	X	X	X
95	MS35649-282	. Nut	10			X	X	X	X	X
100	S500-16	. Clamp	2			X	X	X	X	X
–	608036-1	. Tape	A/R			X	X	X	X	X
105●	M-111	. EGT Probe	4			X	X	X	X	X
110	28-22094-13	. EGT Clamp	4			X	X	X	X	X
115	28-18165-5	. Seat Chassis Console	1			X	X	X	X	X
120	ABM1M-A-C	. Mount	4			X	X	X	X	X

UNCONTROLLED COPY WHEN DOWNLOADED OR PRINTED

Visit www.enstromhelicopter.com for instructions to order an original manual and to register for email notification updates.

FIGURE 11-19. EDM-700-4C INSTALLATION

ITEM NUMBER	PART NUMBER	DESCRIPTION	QTY PER ASSY	MODELS AFFECTED						
				F-28A	280	F-28C	280C	F-28F	280F	280FX
125	ECD050-23	. Washer	1			X	X	X	X	X
125	28-22096-11	. Spacer (Alternate)	1			X	X	X	X	X
130	AN4076-1	. Adapter	1			X	X	X	X	X
135	AA86146	. Temperature Bulb	1			X	X	X	X	X
135	AN5546-1	. Temperature Bulb (Alternate)	1			X	X	X	X	X
135	102-00007	. Temperature Bulb (Alternate)	1			X	X	X	X	X
140●	MM-113-3/8	. CHT Probe	1			X	X	X	X	X
145	MS21913J4	. Plug	1			X	X	X	X	X
150●	M-111T	. TIT Probe	1			X	X	X	X	X
155	28-22094-11	. TIT Clamp	1			X	X	X	X	X
160	S500-10	. Clamp	1			X	X	X	X	X
–	608036-1	. Tape	A/R			X	X	X	X	X
165	MS20995C25	. Safety Wire	A/R			X	X	X	X	X
170	FIT-221V-3/32	. Shrink Tube	A/R			X	X	X	X	X
175●	700702-16	. Harness (P2)	1			X	X	X	X	X
176	GEE62FR-C	. Grommet Edging	A/R			X	X	X	X	X
–Δ	748-RTV	. Sealant	A/R			X	X	X	X	X
180	MS35489-14	. Grommet	1			X	X	X	X	X
185	AN525-832R10	. Screw	1			X	X	X	X	X
190	3/8-6NA	. Clamp	8			X	X	X	X	X
195	S500-12	. Clamp	2			X	X	X	X	X
–	608036-1	. Tape	A/R			X	X	X	X	X
200	S500-6	. Clamp	1			X	X	X	X	X
–	608036-1	. Tape	A/R			X	X	X	X	X
205	AN525-832R8	. Screw	4			X	X	X	X	X
210	S500-3	. Clamp	1			X	X	X	X	X
–	608036-1	. Tape	A/R			X	X	X	X	X
215	CP25WB+	. Fire Barrier Sealant	A/R			X	X	X	X	X
220	MS35489-11	. Grommet	1			X	X	X	X	X

UNCONTROLLED COPY WHEN DOWNLOADED OR PRINTED

Visit www.enstromhelicopter.com for instructions to order an original manual and to register for email notification updates.

FIGURE 11-19. EDM-700-4C INSTALLATION

ITEM NUMBER	PART NUMBER	DESCRIPTION	QTY PER ASSY	MODELS AFFECTED						
				F-28A	280	F-28C	280C	F-28F	280F	280FX
225	1/2-6NA	. Clamp	REF					X		X
226	AN526-832R8	. Screw	REF					X		X
227	AN960-8L	. Washer	REF					X		X
228	AN364-832A	. Nut	REF					X		X
230	AN743-13	. Bracket	2					X		X
235	MS35206-245	. Screw	4					X		X
240	NAS1149FN816P	. Washer	8					X		X
245	MS21083N08	. Nut	4					X		X
250	MS21919WDG6	. Clamp	2					X		X

- ● Items included in EDM-700-4C Engine Data Management System.
- * This switch position applies, as shown, if equipped with an illuminated panel. See also Figure 11-1F Item 150 location.
- Δ Or equivalent. Contact Enstrom Product Support for alternative products.

UNCONTROLLED COPY WHEN DOWNLOADED OR PRINTED

Visit www.enstromhelicopter.com for instructions to order an original manual and to register for email notification updates.

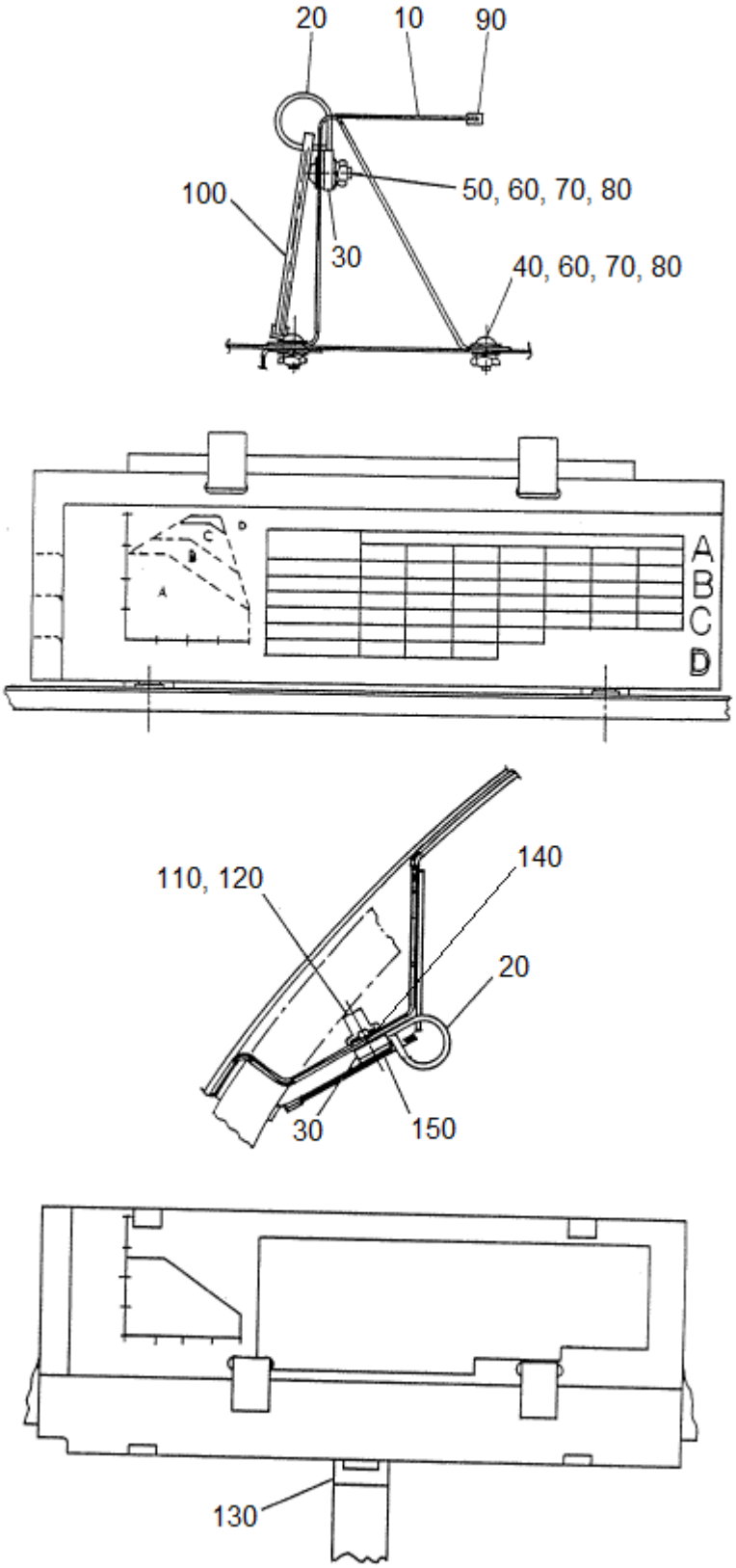

FIGURE 11-20. PLACARD BRACKET INSTALLATION

UNCONTROLLED COPY WHEN DOWNLOADED OR PRINTED

Visit www.enstromhelicopter.com for instructions to order an original manual and to register for email notification updates.

FIGURE 11-20. PLACARD BRACKET INSTALLATION

ITEM NUMBER	PART NUMBER	DESCRIPTION	QTY PER ASSY	MODELS AFFECTED						
				F-28A	280	F-28C	280C	F-28F	280F	280FX
–	28-180051-1	Placard Bracket Installation (Inactive)	REF						X	
–	28-180051-3	Placard Bracket Installation (Inactive)	REF					X		
–	28-180051-5	Placard Bracket Installation (Floats) (Inactive)	REF					X	X	
–	28-180051-7	Placard Installation (MPH)	REF							X
–	28-180051-9	Placard Installation (MPH with Floats)	REF					X		X
–	28-180051-101	Placard Installation (Knots)	REF							X
–	28-180051-103	Placard Installation (Knots with Floats)	REF					X		X
–	28-180051-105	Placard Installation (MPH)	REF					X		
–	28-180051-107	Placard Installation (Knots)	REF					X		
10	28-180049-11	. Bracket	1					X	X	
20	F6YN-625BK	. Clamp	2					X	X	
20	5/8-6B	. Clamp (Replaced by F6YN-625BK)	2					X	X	
30	D6SE-167GY	. Washer	2					X	X	
30	D6-167	. Washer (Replaced by D6SE-167GY)	2					X	X	
40	MS35206-228	. Screw	4					X	X	
40	AN526-632R6	. Screw (Superseded by MS35206-228)	4					X	X	
50	MS35206-229	. Screw	2					X	X	
50	AN526-632R7	. Screw (Superseded by MS35206-229)	2					X	X	
60	AN960PD6L	. Washer	4					X	X	
70	MS35338-41	. Lock Washer	6					X	X	
70	AN935-6	. Lock Washer (Alternate)	6					X	X	
80	AN340-6	. Nut	6					X	X	
90	980-001	. Channel (X-142)	A/R					X	X	
90	AX142P	. Channel (Alternate to X-142)	A/R					X	X	

UNCONTROLLED COPY WHEN DOWNLOADED OR PRINTED

Visit www.enstromhelicopter.com for instructions to order an original manual and to register for email notification updates.

FIGURE 11-20. PLACARD BRACKET INSTALLATION

ITEM NUMBER	PART NUMBER	DESCRIPTION	QTY PER ASSY	MODELS AFFECTED						
				F-28A	280	F-28C	280C	F-28F	280F	280FX
100	28-180050-1	. Plate Assembly	1						X	
–100A	28-180050-3	. Plate Assembly	1						X	
–100B	28-180050-5	. Plate Assembly	1						X	
–100C	28-180050-7	. Plate Assembly	1					X	X	
–100D	28-180050-9	. Plate Assembly	1					X		
–100E*	28-180050-11	. Plate Placard	1					X		
–100F*	28-180050-13	. Plate Placard	1					X		
–100G*	28-180050-15	. Plate Placard	1					X		
–100H*	28-180050-17	. Plate Placard	1					X		
–100E	28-180050-101	. Plate Assembly	1					X		
–100F	28-180050-103	. Plate Assembly	1					X		
–100G	28-180050-105	. Plate Assembly (Floats)	1					X	X	
–100H	28-180050-107	. Plate Assembly (Floats)	1					X	X	
–100I	28-180050-109	. Plate Assembly (Floats)	1					X	X	
-100J♦	28-180050-111	. Plate Assembly	1					X	X	
110	S8P-150	. Plus Nut	2					X		X
120	MS24693-S51	. Screw	2					X		X
120	AN507-832R10	. Screw (Superseded by MS24693-S51)	2					X		X
130	SJ-3501	. Loop (Velcro)	A/R					X		X
140	NAS1149D0463J	. Washer	2					X		X
140	AN960PD416	. Washer (Alternate)	2					X		X
150	28-180067-1	. Plate Assembly (Standard MPH/F°)	1							X
–150A	28-180067-3	. Plate Assembly (Standard MPH/F°)	1							X
–150B	28-180067-5	. Plate Assembly (Standard MPH/F°)	1							X
–150C	28-180067-7	. Plate Assembly (Standard MPH/F°)	1					X		X
–150D	28-180067-9	. Plate Assembly (MPH with Floats F°)	1					X		X

UNCONTROLLED COPY WHEN DOWNLOADED OR PRINTED

Visit www.enstromhelicopter.com for instructions to order an original manual and to register for email notification updates.

FIGURE 11-20. PLACARD BRACKET INSTALLATION

ITEM NUMBER	PART NUMBER	DESCRIPTION	QTY PER ASSY	MODELS AFFECTED						
				F-28A	280	F-28C	280C	F-28F	280F	280FX
–150E	28-180067-101	. Plate Assembly (MPH with Floats F°)	1					X		X
–150F	28-180067-103	. Plate Assembly (MPH with Floats F°)	1					X		X
–150G	28-180067-105	. Plate Assembly (Knots/C°)	1							X
–150H	28-180067-107	. Plate Assembly (Knots/C°)	1							X
–150I	28-180067-109	. Plate Assembly (Knots/C°)	1							X
–150J	28-180067-201	. Plate Assembly (Knots/C°)	1					X		X
–150K	28-180067-203	. Plate Assembly (Knots/C° with Floats)	1					X		X
–150L	28-180067-205	. Plate Assembly (Knots/C° with Floats)	1					X		X
–150M	28-180067-207	. Plate Assembly (Knots/C° with Floats)	1					X		X
–150N	28-180067-209	. Plate Assembly (Standard F°/MPH)	1					X		
–150O	28-180067-211	. Plate Assembly (Standard F°/MPH)	1					X		
–150P	28-180067-213	. Plate Assembly (Standard F°/MPH)	1					X		
–150Q	28-180067-215	. Plate Assembly (Knots/C°)	1					X		
–150R	28-180067-217	. Plate Assembly (Knots/C°)	1					X		
–150S	28-180067-219	. Plate Assembly (Knots/C°)	1					X		

* Used on foreign configured aircraft.

♦ Used on agricultural spray configured models only.

UNCONTROLLED COPY WHEN DOWNLOADED OR PRINTED

Visit www.enstromhelicopter.com for instructions to order an original manual and to register for email notification updates.

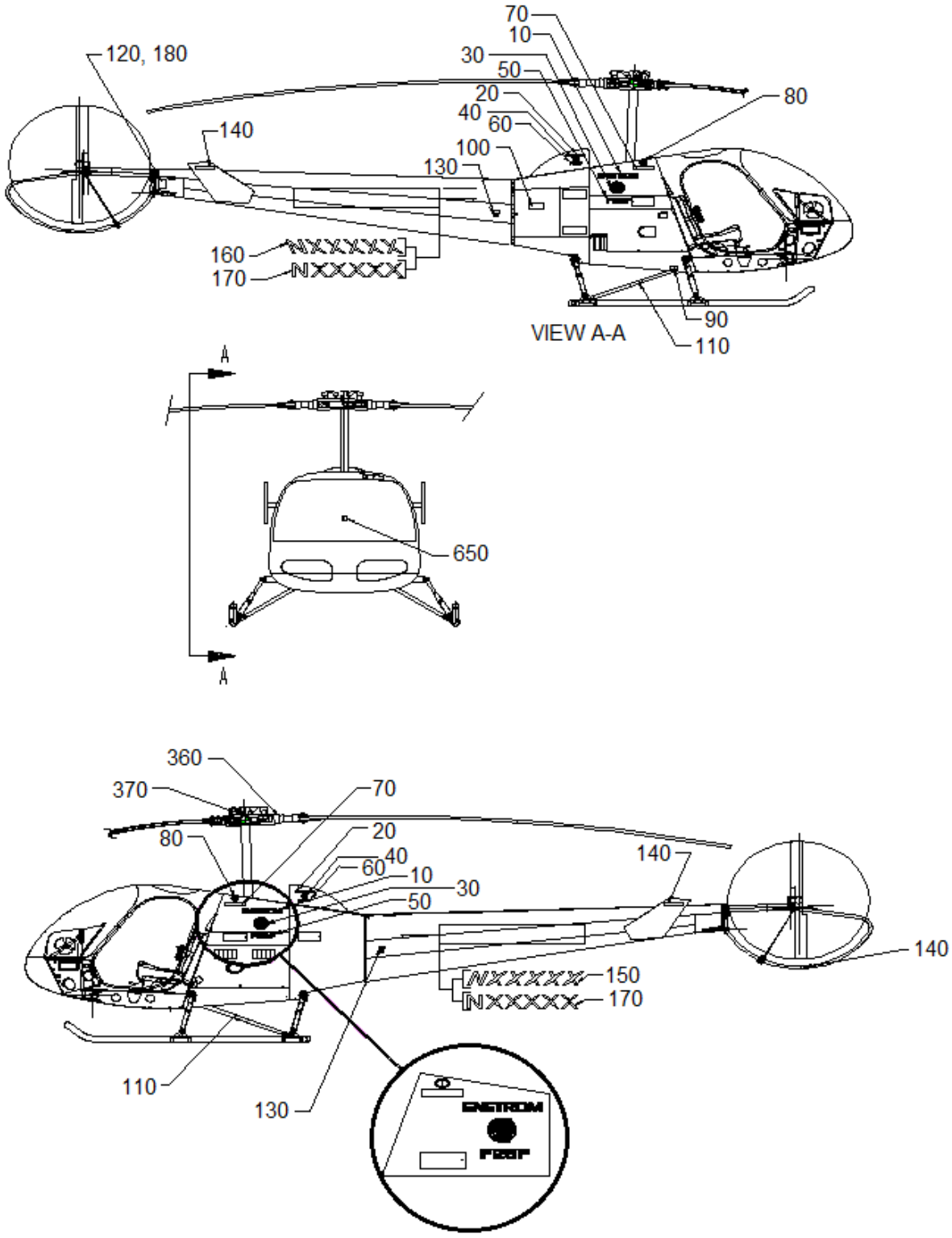

Sheet 1 of 13

FIGURE 11-21. PLACARD INSTALLATION

UNCONTROLLED COPY WHEN DOWNLOADED OR PRINTED

Visit www.enstromhelicopter.com for instructions to order an original manual and to register for email notification updates.

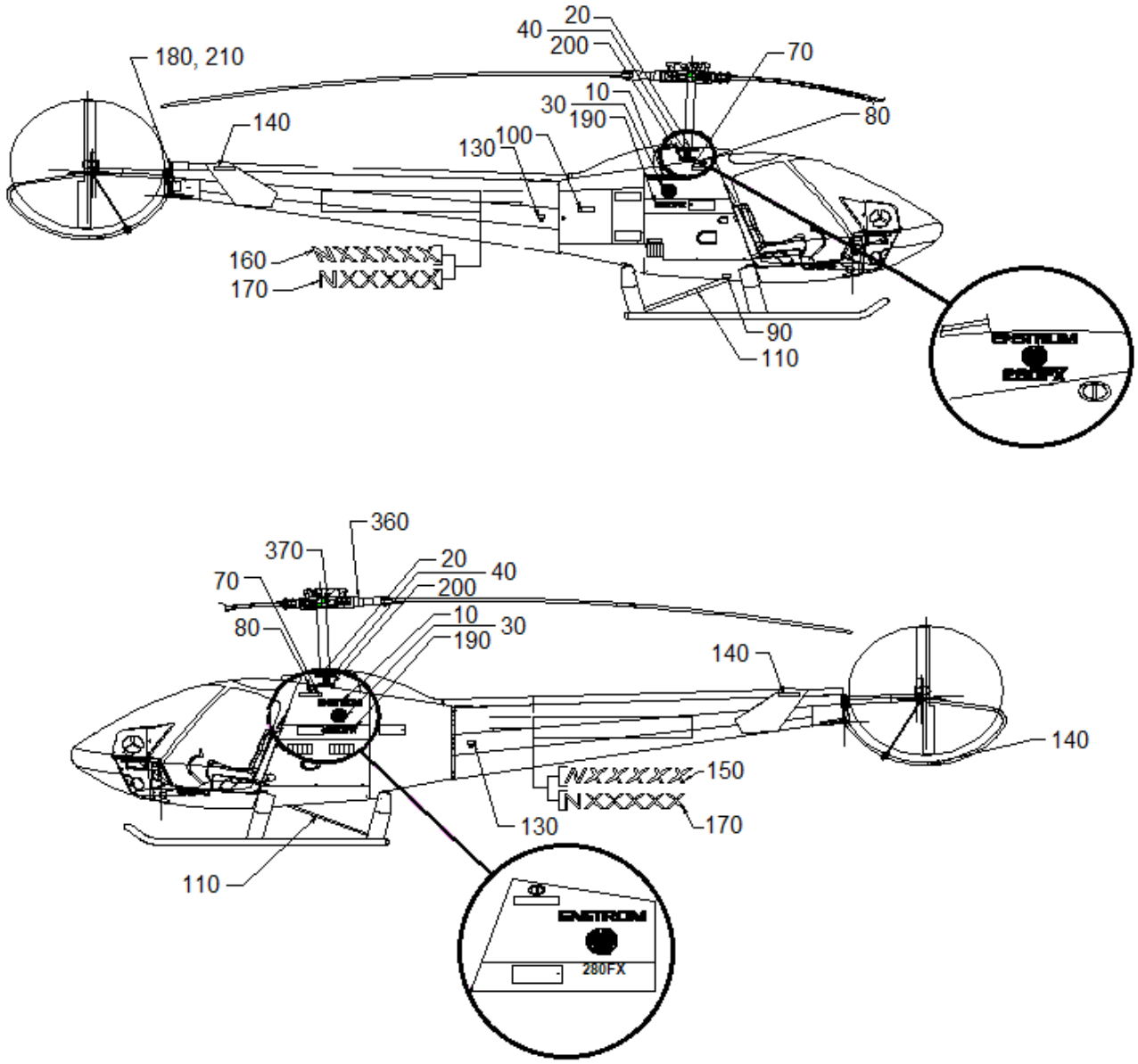

Sheet 2 of 13

FIGURE 11-21. PLACARD INSTALLATION

UNCONTROLLED COPY WHEN DOWNLOADED OR PRINTED

Visit www.enstromhelicopter.com for instructions to order an original manual and to register for email notification updates.

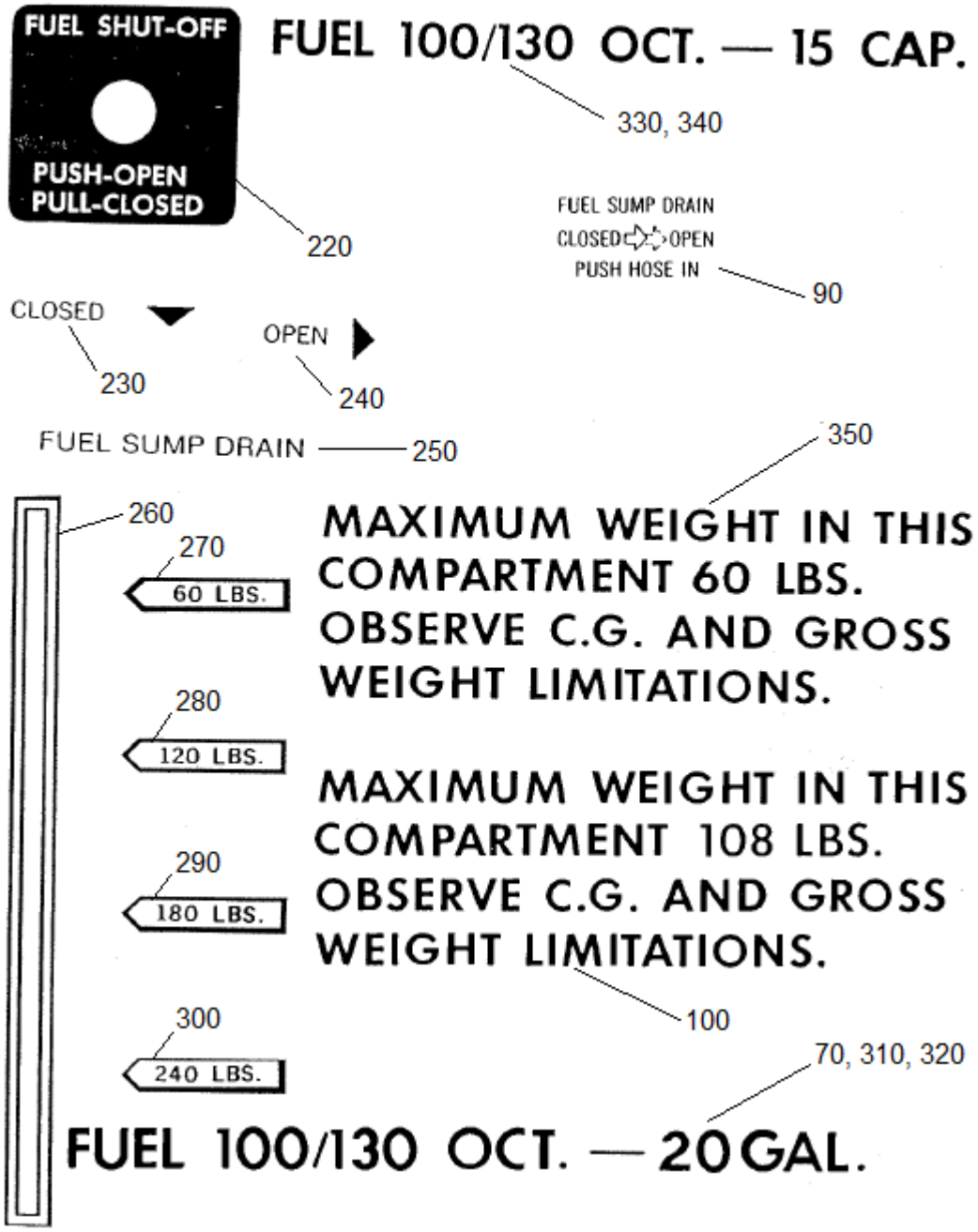

Sheet 3 of 13

FIGURE 11-21. PLACARD INSTALLATION

UNCONTROLLED COPY WHEN DOWNLOADED OR PRINTED

Visit www.enstromhelicopter.com for instructions to order an original manual and to register for email notification updates.

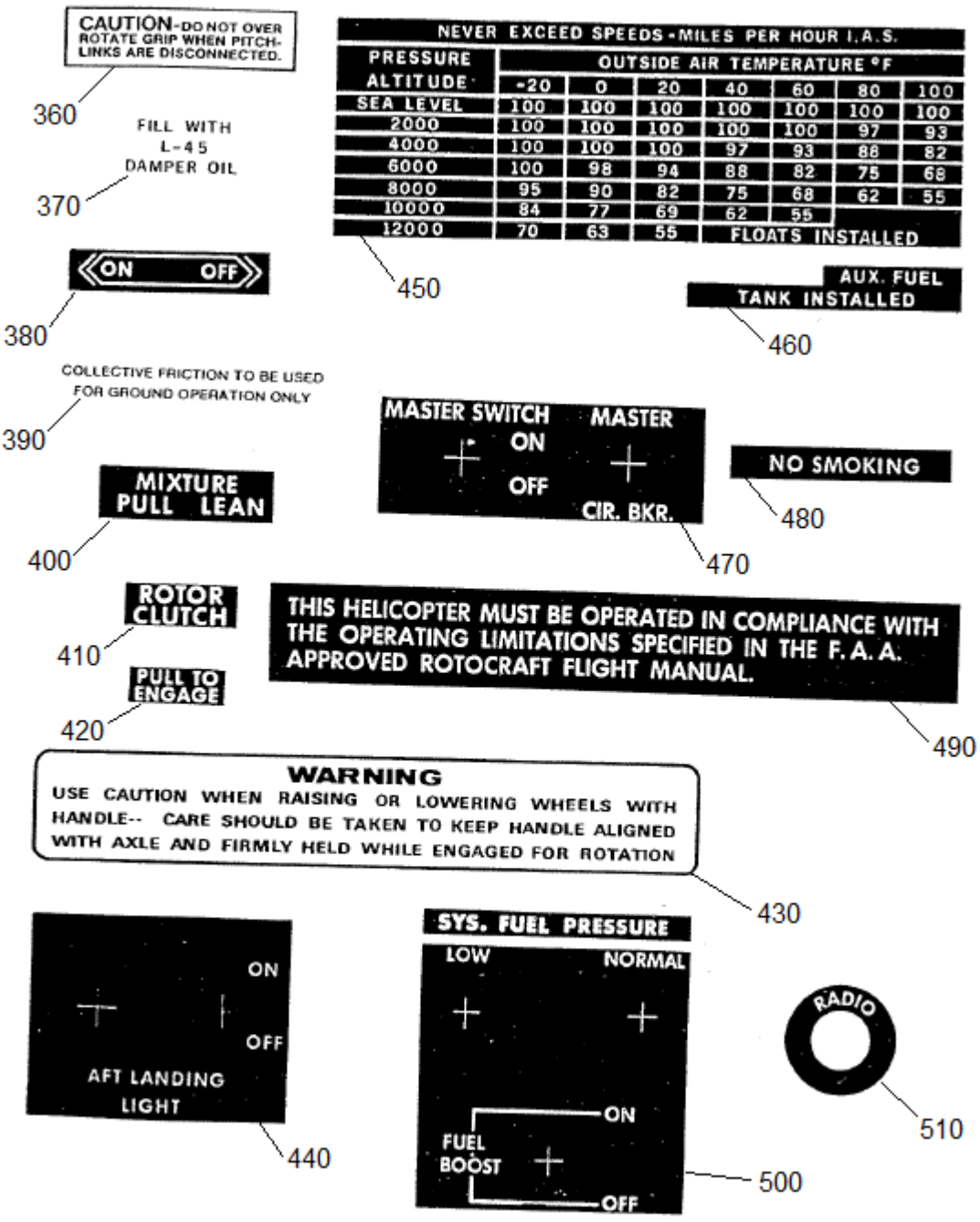

Sheet 4 of 13

FIGURE 11-21. PLACARD INSTALLATION

UNCONTROLLED COPY WHEN DOWNLOADED OR PRINTED

Visit www.enstromhelicopter.com for instructions to order an original manual and to register for email notification updates.

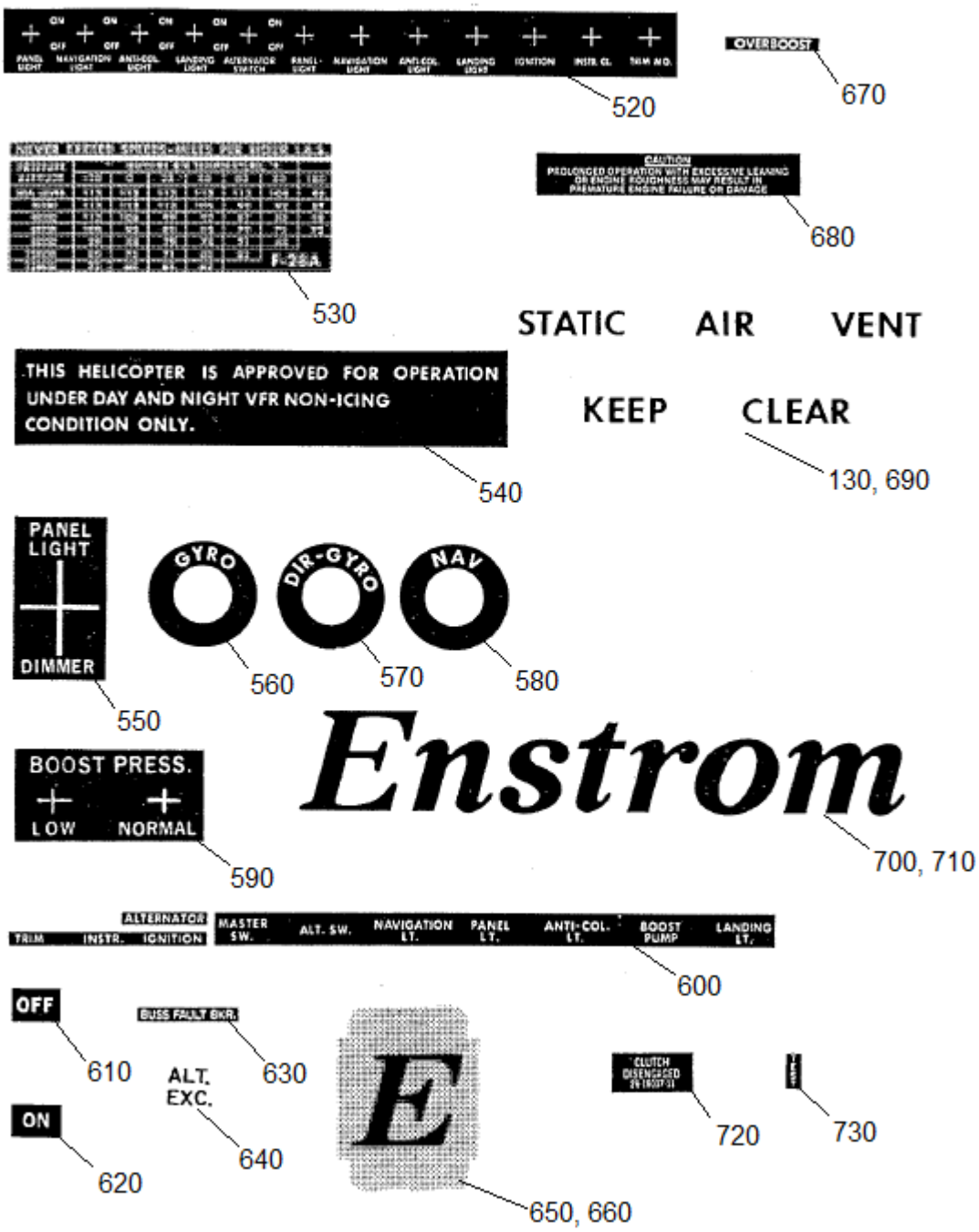

Sheet 5 of 13

FIGURE 11-21. PLACARD INSTALLATION

UNCONTROLLED COPY WHEN DOWNLOADED OR PRINTED

Visit www.enstromhelicopter.com for instructions to order an original manual and to register for email notification updates.

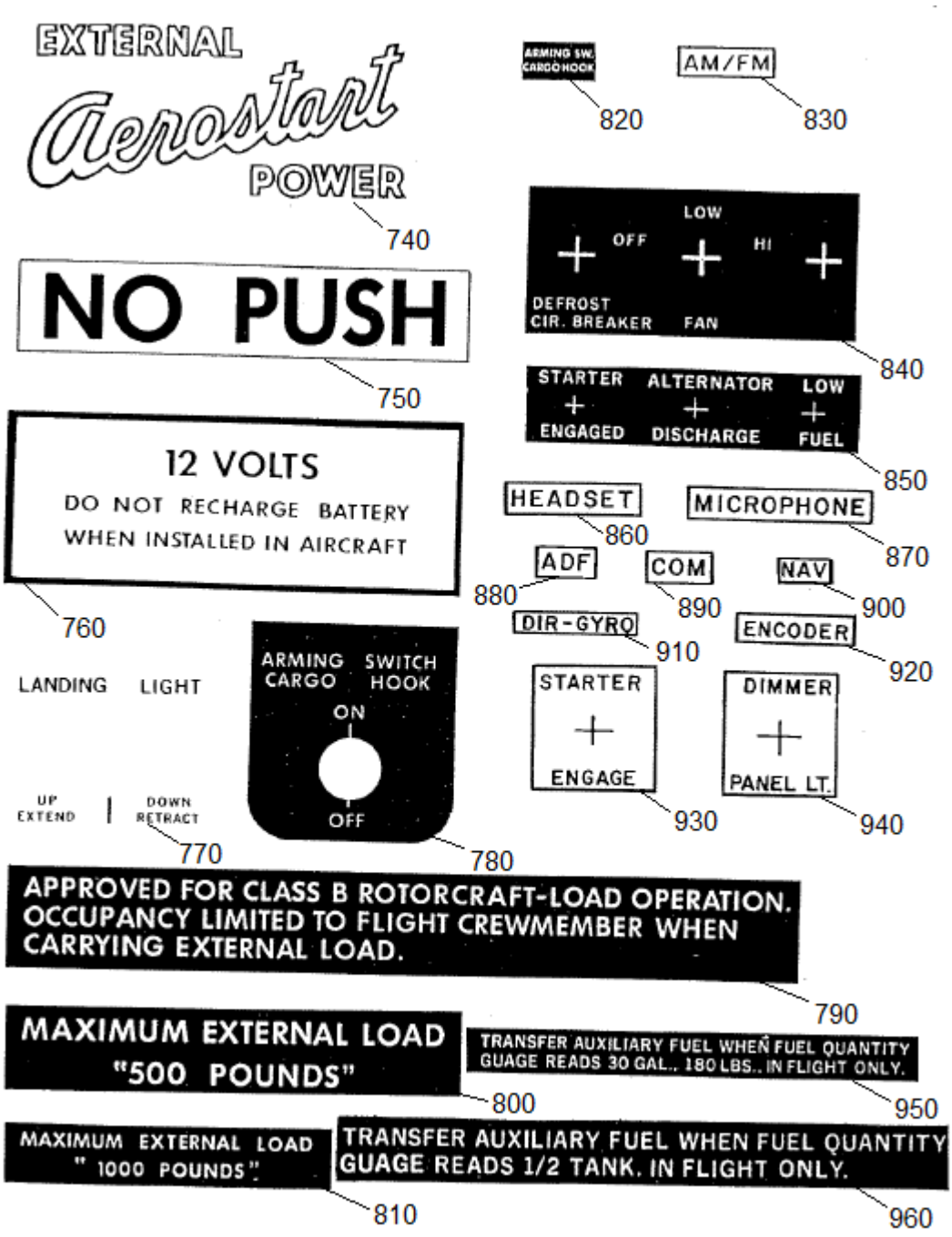

Sheet 6 of 13

FIGURE 11-21. PLACARD INSTALLATION

UNCONTROLLED COPY WHEN DOWNLOADED OR PRINTED

Visit www.enstromhelicopter.com for instructions to order an original manual and to register for email notification updates.

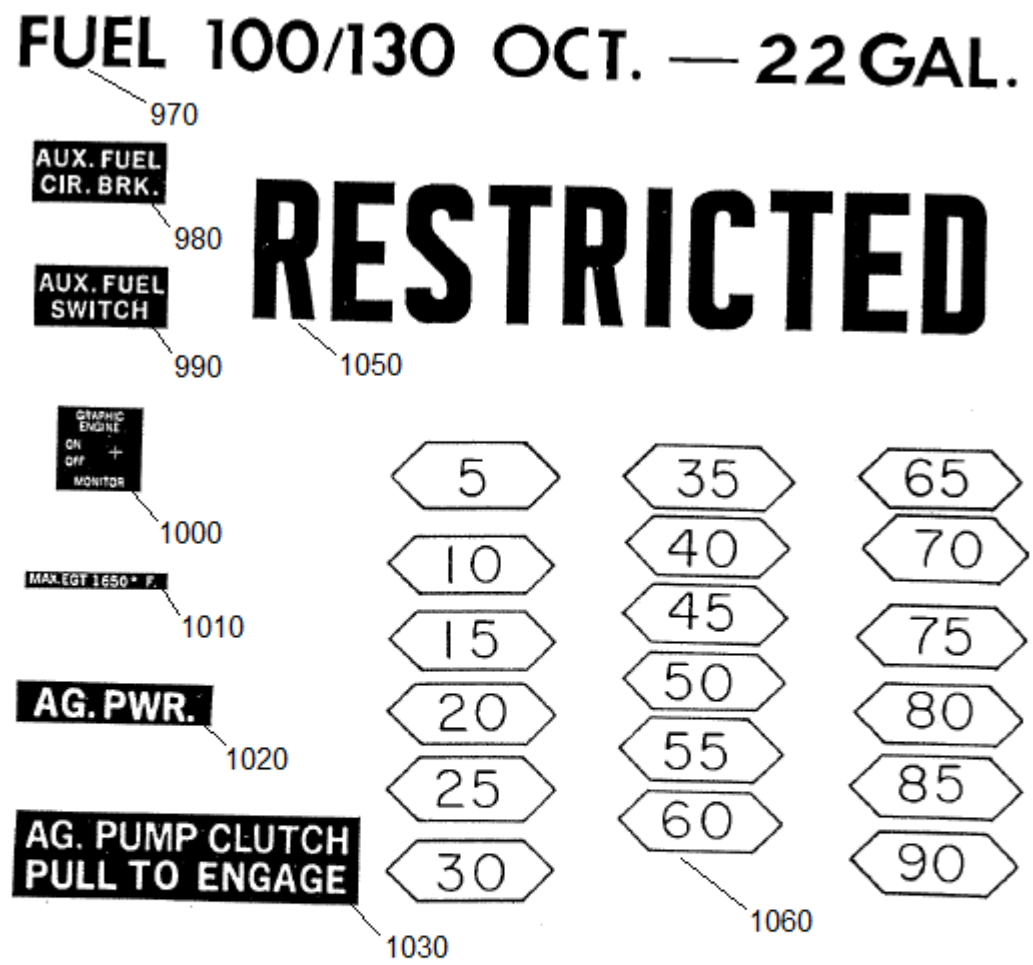

1040

RESTRICTED CATEGORY - NEVER EXCEED SPEEDS M.P.H. IAS							
PRESSURE ALTITUDE	OUTSIDE AIR TEMPERATURE °F						
	-20	0	20	40	60	80	100
SEA LEVEL	85	85	85	85	85	85	85
1000	85	85	85	85	85	83	82
2000	85	85	85	84	83	82	81
3000	85	85	84	83	82	81	80
4000	85	84	83	82	81	80	
5000	84	83	82	81	80	AG. OPERATION	
6000	83	82	81	80			

Sheet 7 of 13

FIGURE 11-21. PLACARD INSTALLATION

UNCONTROLLED COPY WHEN DOWNLOADED OR PRINTED

Visit www.enstromhelicopter.com for instructions to order an original manual and to register for email notification updates.

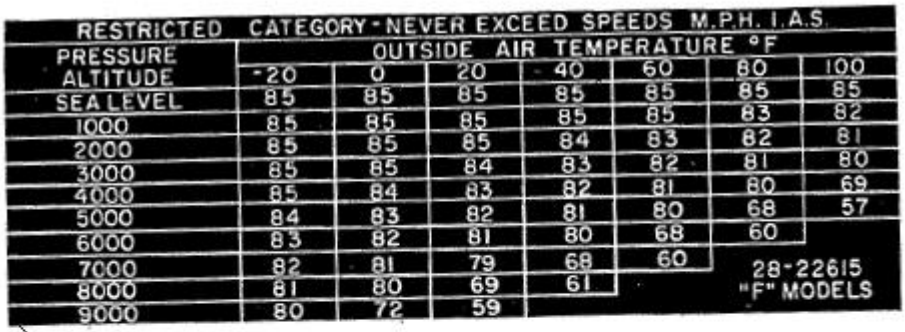

RESTRICTED CATEGORY - NEVER EXCEED SPEEDS M.P.H. I.A.S.							
PRESSURE ALTITUDE	OUTSIDE AIR TEMPERATURE °F						
	-20	0	20	40	60	80	100
SEA LEVEL	85	85	85	85	85	85	85
1000	85	85	85	85	85	83	82
2000	85	85	85	84	83	82	81
3000	85	85	84	83	82	81	80
4000	85	84	83	82	81	80	69
5000	84	83	82	81	80	68	57
6000	83	82	81	80	68	60	
7000	82	81	79	68	60		
8000	81	80	69	61			
9000	80	72	59				

28-22615
"F" MODELS

1070

1080

AG
KIT

Sheet 8 of 13

FIGURE 11-21. PLACARD INSTALLATION

UNCONTROLLED COPY WHEN DOWNLOADED OR PRINTED

Visit www.enstromhelicopter.com for instructions to order an original manual and to register for email notification updates.

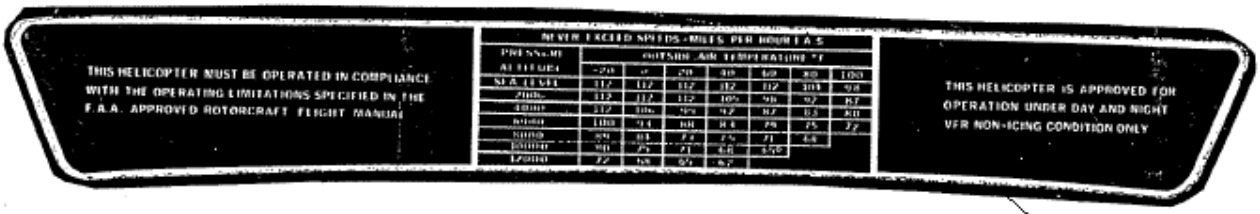

1090

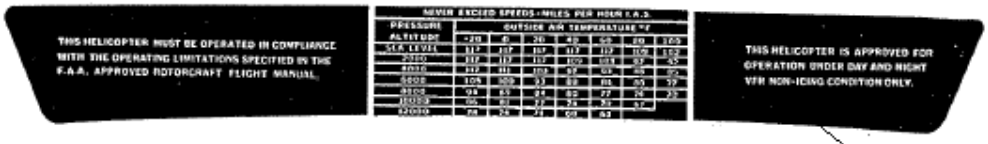

1100

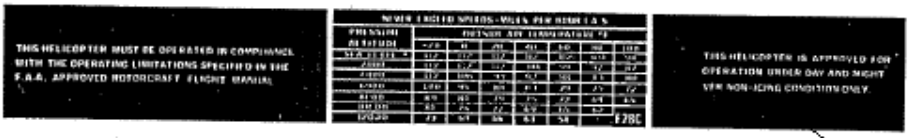

1110

Sheet 9 of 13

FIGURE 11-21. PLACARD INSTALLATION

UNCONTROLLED COPY WHEN DOWNLOADED OR PRINTED

Visit www.enstromhelicopter.com for instructions to order an original manual and to register for email notification updates.

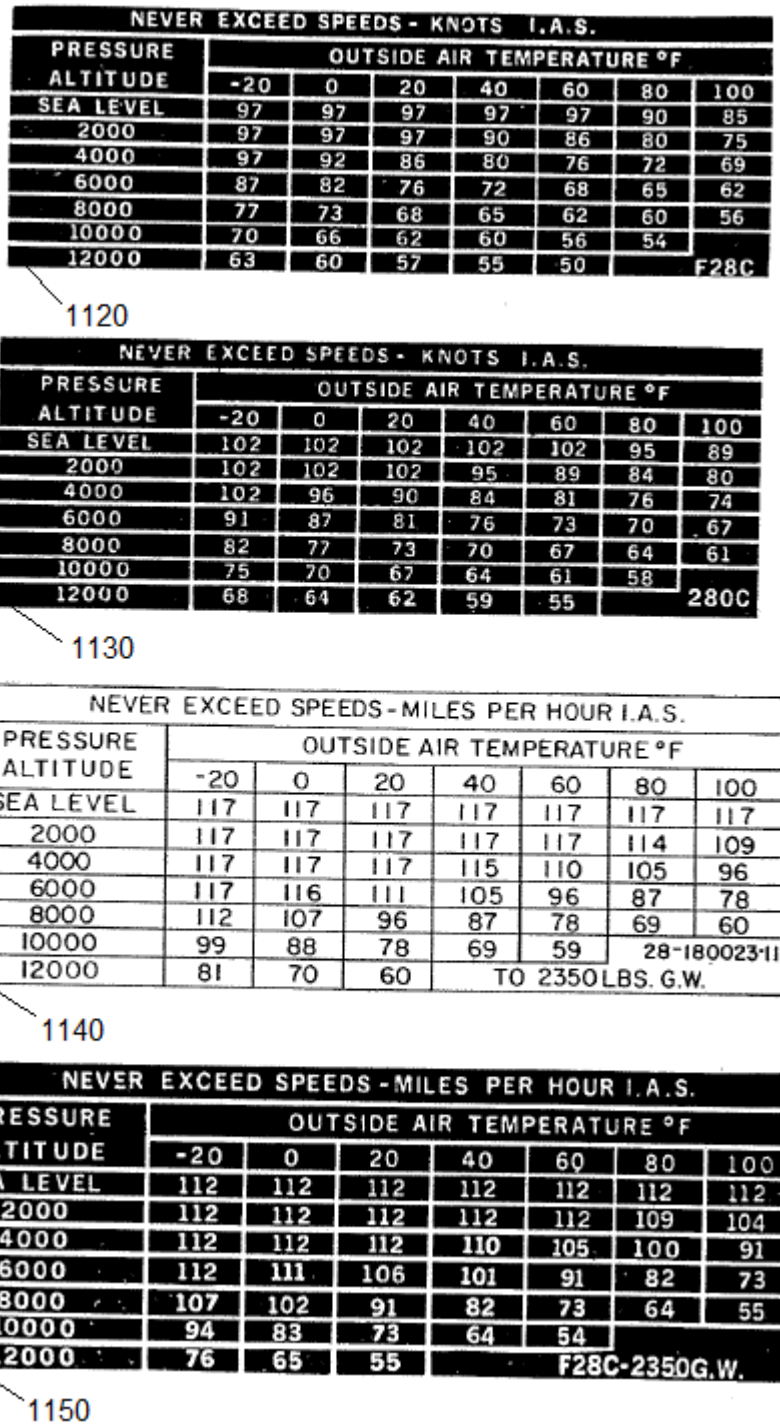

NEVER EXCEED SPEEDS - KNOTS I.A.S.

PRESSURE ALTITUDE	OUTSIDE AIR TEMPERATURE °F						
	-20	0	20	40	60	80	100
SEA LEVEL	97	97	97	97	97	90	85
2000	97	97	97	90	86	80	75
4000	97	92	86	80	76	72	69
6000	87	82	76	72	68	65	62
8000	77	73	68	65	62	60	56
10000	70	66	62	60	56	54	
12000	63	60	57	55	50		F28C

1120

NEVER EXCEED SPEEDS - KNOTS I.A.S.

PRESSURE ALTITUDE	OUTSIDE AIR TEMPERATURE °F						
	-20	0	20	40	60	80	100
SEA LEVEL	102	102	102	102	102	95	89
2000	102	102	102	95	89	84	80
4000	102	96	90	84	81	76	74
6000	91	87	81	76	73	70	67
8000	82	77	73	70	67	64	61
10000	75	70	67	64	61	58	
12000	68	64	62	59	55		280C

1130

NEVER EXCEED SPEEDS - MILES PER HOUR I.A.S.

PRESSURE ALTITUDE	OUTSIDE AIR TEMPERATURE °F						
	-20	0	20	40	60	80	100
SEA LEVEL	117	117	117	117	117	117	117
2000	117	117	117	117	117	114	109
4000	117	117	117	115	110	105	96
6000	117	116	111	105	96	87	78
8000	112	107	96	87	78	69	60
10000	99	88	78	69	59		28-180023-11
12000	81	70	60	TO 2350 LBS. G.W.			

1140

NEVER EXCEED SPEEDS - MILES PER HOUR I.A.S.

PRESSURE ALTITUDE	OUTSIDE AIR TEMPERATURE °F						
	-20	0	20	40	60	80	100
SEA LEVEL	112	112	112	112	112	112	112
2000	112	112	112	112	112	109	104
4000	112	112	112	110	105	100	91
6000	112	111	106	101	91	82	73
8000	107	102	91	82	73	64	55
10000	94	83	73	64	54		
12000	76	65	55	F28C-2350G.W.			

1150

FIGURE 11-21. PLACARD INSTALLATION

UNCONTROLLED COPY WHEN DOWNLOADED OR PRINTED

Visit www.enstromhelicopter.com for instructions to order an original manual and to register for email notification updates.

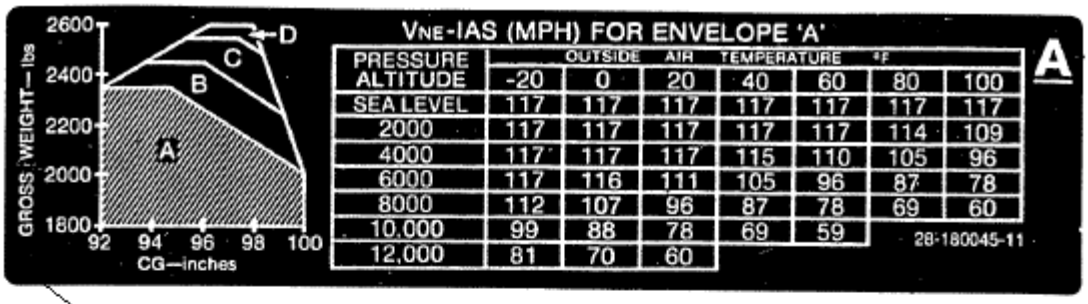

VNE-IAS (MPH) FOR ENVELOPE 'A'

PRESSURE ALTITUDE	OUTSIDE AIR TEMPERATURE °F						
	-20	0	20	40	60	80	100
SEA LEVEL	117	117	117	117	117	117	117
2000	117	117	117	117	117	114	109
4000	117	117	117	115	110	105	96
6000	117	116	111	105	96	87	78
8000	112	107	96	87	78	69	60
10,000	99	88	78	69	59		
12,000	81	70	60				

28-180045-11 A

1160

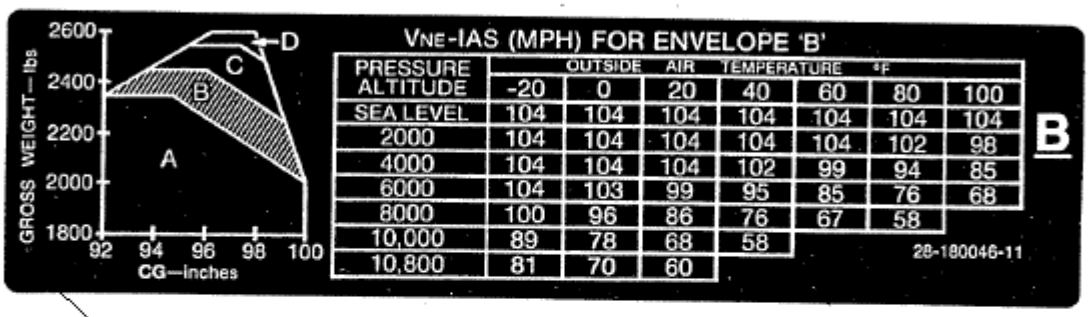

VNE-IAS (MPH) FOR ENVELOPE 'B'

PRESSURE ALTITUDE	OUTSIDE AIR TEMPERATURE °F						
	-20	0	20	40	60	80	100
SEA LEVEL	104	104	104	104	104	104	104
2000	104	104	104	104	104	102	98
4000	104	104	104	102	99	94	85
6000	104	103	99	95	85	76	68
8000	100	96	86	76	67	58	
10,000	89	78	68	58			
10,800	81	70	60				

28-180046-11 B

1170

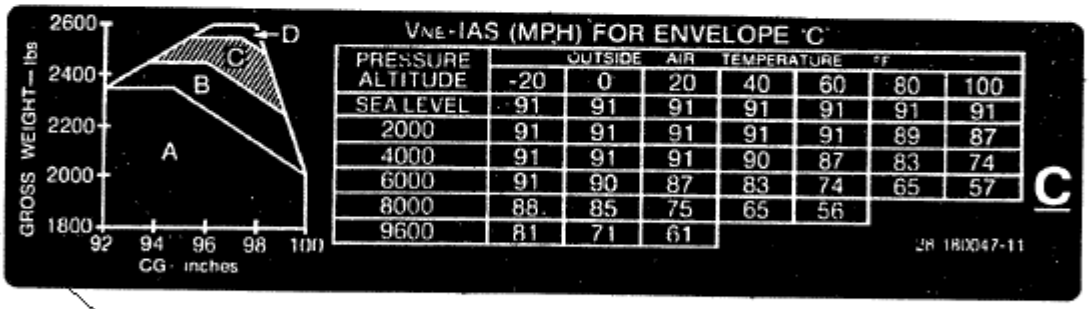

VNE-IAS (MPH) FOR ENVELOPE 'C'

PRESSURE ALTITUDE	OUTSIDE AIR TEMPERATURE °F						
	-20	0	20	40	60	80	100
SEA LEVEL	91	91	91	91	91	91	91
2000	91	91	91	91	91	89	87
4000	91	91	91	90	87	83	74
6000	91	90	87	83	74	65	57
8000	88	85	75	65	56		
9600	81	71	61				

28-180047-11 C

1180

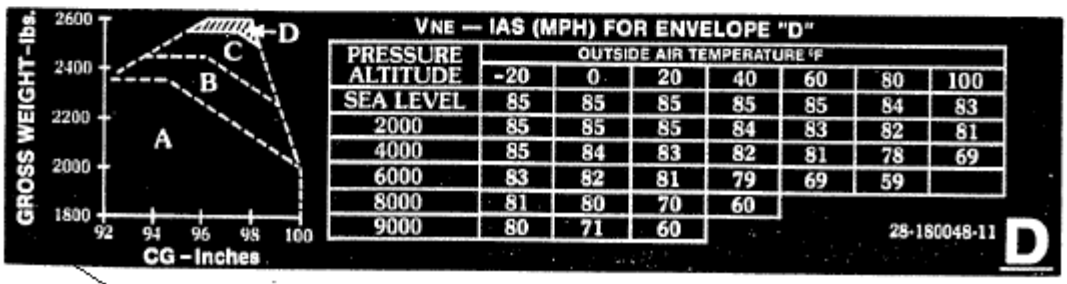

VNE — IAS (MPH) FOR ENVELOPE "D"

PRESSURE ALTITUDE	OUTSIDE AIR TEMPERATURE °F						
	-20	0	20	40	60	80	100
SEA LEVEL	85	85	85	85	85	84	83
2000	85	85	85	84	83	82	81
4000	85	84	83	82	81	78	69
6000	83	82	81	79	69	59	
8000	81	80	70	60			
9000	80	71	60				

28-180048-11 D

1190

Sheet 11 of 13

FIGURE 11-21. PLACARD INSTALLATION

UNCONTROLLED COPY WHEN DOWNLOADED OR PRINTED

Visit www.enstromhelicopter.com for instructions to order an original manual and to register for email notification updates.

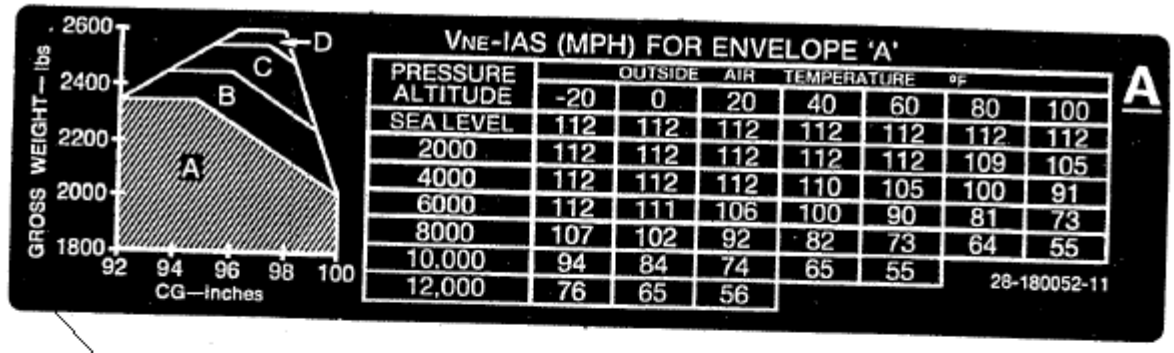

VNE-IAS (MPH) FOR ENVELOPE 'A'

PRESSURE ALTITUDE	OUTSIDE AIR TEMPERATURE °F						
	-20	0	20	40	60	80	100
SEA LEVEL	112	112	112	112	112	112	112
2000	112	112	112	112	112	109	105
4000	112	112	112	110	105	100	91
6000	112	111	106	100	90	81	73
8000	107	102	92	82	73	64	55
10,000	94	84	74	65	55		
12,000	76	65	56				

A

28-180052-11

1200

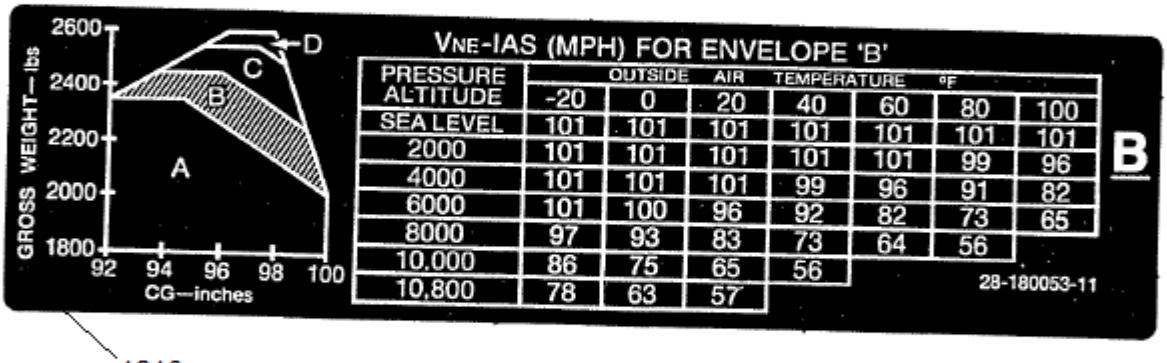

VNE-IAS (MPH) FOR ENVELOPE 'B'

PRESSURE ALTITUDE	OUTSIDE AIR TEMPERATURE °F						
	-20	0	20	40	60	80	100
SEA LEVEL	101	101	101	101	101	101	101
2000	101	101	101	101	101	99	96
4000	101	101	101	99	96	91	82
6000	101	100	96	92	82	73	65
8000	97	93	83	73	64	56	
10,000	86	75	65	56			
10,800	78	63	57				

B

28-180053-11

1210

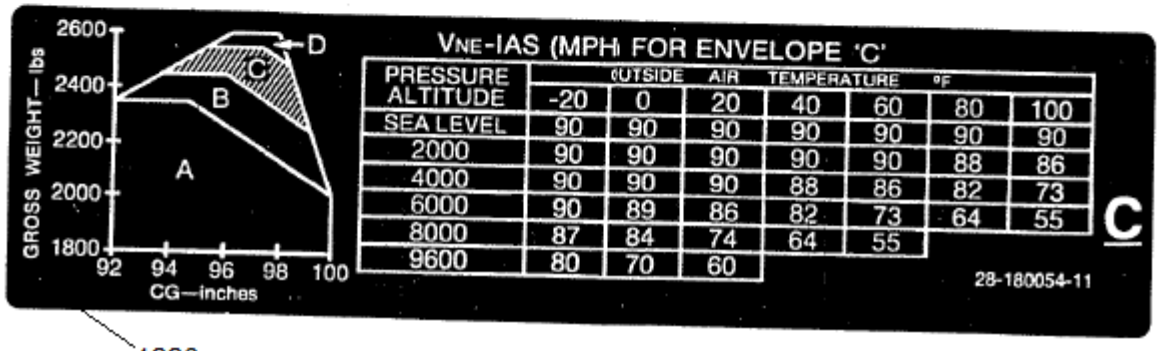

VNE-IAS (MPH) FOR ENVELOPE 'C'

PRESSURE ALTITUDE	OUTSIDE AIR TEMPERATURE °F						
	-20	0	20	40	60	80	100
SEA LEVEL	90	90	90	90	90	90	90
2000	90	90	90	90	90	88	86
4000	90	90	90	88	86	82	73
6000	90	89	86	82	73	64	55
8000	87	84	74	64	55		
9600	80	70	60				

C

28-180054-11

1220

FIGURE 11-21. PLACARD INSTALLATION

UNCONTROLLED COPY WHEN DOWNLOADED OR PRINTED

Visit www.enstromhelicopter.com for instructions to order an original manual and to register for email notification updates.

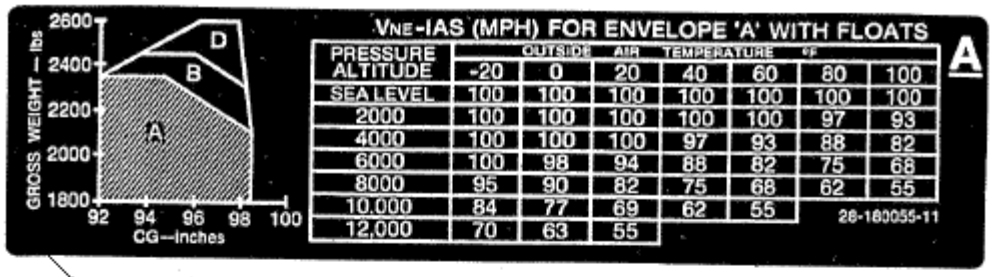

1230

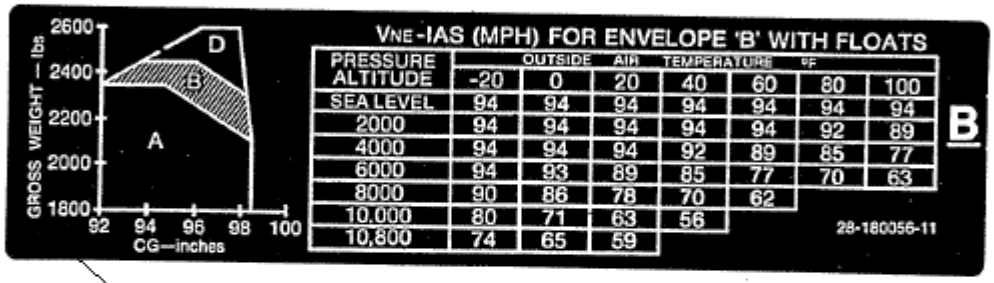

1240

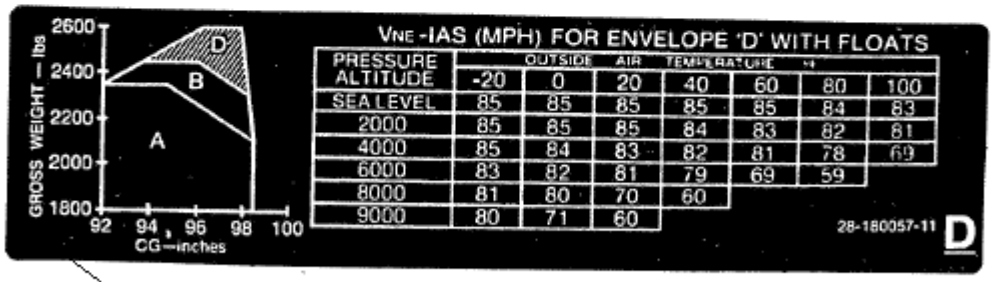

1250

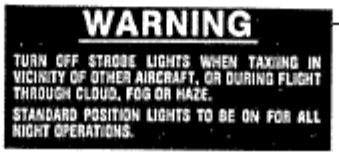

1260

Sheet 13 of 13

FIGURE 11-21. PLACARD INSTALLATION

UNCONTROLLED COPY WHEN DOWNLOADED OR PRINTED

Visit www.enstromhelicopter.com for instructions to order an original manual and to register for email notification updates.

FIGURE 11-21. PLACARD INSTALLATION

ITEM NUMBER	PART NUMBER	DESCRIPTION	QTY PER ASSY	MODELS AFFECTED						
				F-28A	280	F-28C	280C	F-28F	280F	280FX
–	28-00017-1	Placard Installation F28F	REF					X		
–	28-00018-1	Placard Installation 280FX	REF							X
10	28-00014-1	. Placard: Decal “Enstrom” Full	A/R					X		X
20	28-00014-3	. Placard: Decal “Enstrom” Small	A/R					X		X
30	28-00015-1	. Placard: Decal Blade Logo Full	A/R					X		X
40	28-00015-3	. Placard: Decal Blade Logo Small	A/R					X		X
50	28-00016-1	. Placard: Decal, “F28F” Full	A/R					X		
60	28-00016-3	. Placard: Decal, “F28F” Small	A/R					X		
70	28-12433-1	. Placard: Fuel “100/130 OCT-20 GAL”	2			X	X	X	X	X
80	28-12433-21	. Placard: Fuel Tank Cap	2					X		X
90	28-12479-11	. Placard: “Fuel Sump Drain”	1				X	X	X	X
100	28-12830-11	. Placard: Baggage Box Max 108 lb.	1			X	X	X	X	X
110	28-17164-13	. Placard: No Step	2					X		X
120	28-18009-15	. Placard: Data, A/C MFG (F28F)	1					X		
130	28-18105-11	. Placard: Static	2	X	X	X	X	X	X	X
140	28-20107-11	. Placard: “No Push”	3	X	X	X	X	X	X	X
150	4119920-11	. Registration Number Placard	A/R					X		X
160	4119920-13	. Registration Number Placard	A/R					X		X
170	4119920-15	. Registration Number Placard	A/R					X		X
180	CCR274SS-3-02	. Rivet	4					X		X
190	28-00013-1	. Placard: Decal, “280FX” Full	A/R							X
200	28-00013-3	. Placard: Decal “280FX” Small	A/R							X
210	28-18009-11	. Placard: Data, A/C MFG (280FX)	1							X
220	28-12416-3	. Placard – Fuel Shut-Off	1	X	X	X	X	X	X	X
230	28-12420-11	. Placard – Sump Pump	1	X	X	X	X	X	X	
240	28-12420-13	. Placard – Sump Drain	1	X	X	X	X	X	X	

UNCONTROLLED COPY WHEN DOWNLOADED OR PRINTED

Visit www.enstromhelicopter.com for instructions to order an original manual and to register for email notification updates.

FIGURE 11-21. PLACARD INSTALLATION

ITEM NUMBER	PART NUMBER	DESCRIPTION	QTY PER ASSY	MODELS AFFECTED						
				F-28A	280	F-28C	280C	F-28F	280F	280FX
250	28-12420-15	. Placard – Sump Drain	1	X	X	X	X	X	X	
260	28-12424-1	. Placard – Sight Gauge Border	1	X	X	X	X			
270	28-12425-1	. Placard – Fuel Tank 60 lbs.	1	X	X	X	X			
280	28-12426-1	. Placard – Fuel Tank 120 lbs.	1	X	X	X	X			
290	28-12427-1	. Placard – Fuel Tank 180 lbs.	1	X	X	X	X			
300	28-12428-1	. Placard – Fuel Tank 240 lbs.	1	X	X	X	X			
310	28-12433-1	. Placard – Fuel Tank Cap. 20 Gal. (White)	2			X	X	X	X	X
310	28-12433-2	. Placard – Fuel Tank Cap. 20 Gal. (White) (Replaced by 28-12433-1)	2			X	X	X	X	X
320	28-12433-13	. Placard – Fuel Tank Cap. 20 Gal. (Red)	2			X	X	X	X	X
330	28-12450-11	. Placard – Fuel Tank 15 Gal. (Red)	1	X	X					
340	28-12450-13	. Placard – Fuel Tank 15 Gal. (White)	1	X	X					
350	28-12816-1	. Placard – 60# Max. Wt. (Baggage Box)	1	X	X	X	X			
360	28-14270-1	. Placard – Main Rotor Blade Grip	3	X	X	X	X	X	X	X
370	28-14374-15	. Placard – Oil Damper Reservoir	3	X	X	X	X	X	X	X
370	28-14374-13	. Placard – Damper Reservoir (Replaced by 28-14374-15)	3	X	X	X	X	X	X	X
380	28-16215-1	. Placard – On/Off	A/R	X	X	X	X	X	X	X
390	28-16296-11	. Placard – Coll. Friction	1	X	X	X	X	X	X	X
400	28-16449-1	. Fuel Mixture Placard	1	X	X	X	X	X	X	X
410	28-16525-1	. Placard – Rotor Clutch	1	X	X	X	X	X	X	X
420	28-16526-1	. Placard – Pull to Engage	1	X	X	X	X	X	X	X
430	28-17005-1	. Warning Placard – Ground Handling Lever	1	X	X	X	X	X	X	X
440	28-17318-1	. Placard – Aft Landing Light	1	X						
450	28-17331-15	. Placard Never Ex Speeds Floats	1			X	X	X	X	X

UNCONTROLLED COPY WHEN DOWNLOADED OR PRINTED

Visit www.enstromhelicopter.com for instructions to order an original manual and to register for email notification updates.

FIGURE 11-21. PLACARD INSTALLATION

ITEM NUMBER	PART NUMBER	DESCRIPTION	QTY PER ASSY	MODELS AFFECTED						
				F-28A	280	F-28C	280C	F-28F	280F	280FX
450	28-17331-1	. Placard – Vne (Float, Aux. Fuel) (Replaced by 28-17331-15)	1			X	X	X	X	X
460	28-17331-13	. Placard – Vne (Float, Aux. Fuel)	1			X	X	X	X	X
470	28-18005-1	. Placard – Master Switch	1	X		X				
480	28-18006-1	. Placard – No Smoking	1	X						
490	28-18007-1	. Placard – Manual Compliance	1	X	X		X			
500	28-18011-1	. Placard – System Fuel Pressure	1	X	X					
510	28-18012-1	. Placard – Radio C-B	1	X	X					
520	28-18013-1	. Placard – Inst. Ident.	1	X						
530	28-18014-1	. Placard – Vne (F28A)	1	X						
540	28-18015-1	. Placard – Limitations	1	X						
550	28-18016-1	. Placard – Panel Light Dimmer	1	X	X	X	X	X	X	X
560	28-18037-1	. Placard – Gyro C-B	1	X	X	X	X	X	X	X
570	28-18037-2	. Placard – Gyro C-B	1	X	X	X	X	X	X	X
580	28-18037-3	. Placard – Nav. C-B	1	X	X	X	X	X	X	X
590	28-18043-1	. Placard – Fuel Press.	1	X						
600	28-18048-1	. Placard – Switch Panel	1	X						
610	28-18052-1	. Placard – Off	7	X	X					
620	28-18053-1	. Placard – On	7	X	X					
630	28-18081-11	. Placard – Buss Fault Breaker	1			X	X	X	X	X
640	28-18087-1	. Placard – Alternator Excitation	1			X			X	
650	28-18088-1	. Placard – “E” (Compass)	1			X			X	
660	28-18088-2	. Placard – “E” (Compass)	1			X			X	
670	28-18092-11	. Placard – Overboost	1	X		X	X		X	X
680	28-18100-11	. Placard – Caution, Mixture Control	1		X	X	X	X	X	X
690	28-18105-13	. Placard – Static Air Vent	2	X	X	X	X	X	X	X
700	28-18107-1	. Placard – Enstrom (Large White)	1	X	X	X	X	X	X	X
710	28-18108-1	. Placard – Enstrom (Large Black)	1	X	X	X	X	X	X	X
720	28-19037-11	. Placard – Clutch Disengaged	1			X	X	X	X	X

UNCONTROLLED COPY WHEN DOWNLOADED OR PRINTED

Visit www.enstromhelicopter.com for instructions to order an original manual and to register for email notification updates.

FIGURE 11-21. PLACARD INSTALLATION

ITEM NUMBER	PART NUMBER	DESCRIPTION	QTY PER ASSY	MODELS AFFECTED						
				F-28A	280	F-28C	280C	F-28F	280F	280FX
730	28-19046-11	. Placard – Test	1					X		X
740	28-19101-11	. Placard – APU Install.	1	X	X	X	X	X	X	X
750	28-20107-11	. Placard – No Push	7	X	X	X	X	X	X	X
750	28-20107-13	. Placard – No Push (Replaced by 28-20107-11)	7	X	X	X	X	X	X	X
760	28-21021-1	. Placard – 12 Volts	1	X						
770	28-21035-5	. Placard – Fwd. Light	1			X		X		
780	28-22013-1	. Placard – Cargo Arming Switch	1	X	X	X	X	X	X	X
790	28-22016-5	. Placard – Cargo Hook Installation	1	X	X	X	X	X	X	X
790	28-22016-1	. Placard – Load Oper. (Replaced by 28-22016-5)	1	X	X	X	X	X	X	X
800	28-22018-1	. Placard – Cargo Hook Limitations (500#)	1	X	X	X	X	X	X	X
810	28-22018-2	. Placard – Cargo Hook Limitations (1000#)	1	X	X	X	X	X	X	X
820	28-22019-1	. Placard – Cargo Hook	1	X	X	X	X	X	X	X
830	28-22216-13	. EC-100 Install.	A/R					X	X	X
840	28-22343-1	. Placard – Center Console Defrost	1			X				
850	28-22501-1	. Decals – Start – Alter.	A/R	X	X	X	X	X	X	X
860	28-22501-2	. Headset	A/R	X	X	X	X	X	X	X
870	28-22501-3	. Microphone	A/R	X	X	X	X	X	X	X
880	28-22501-4	. ADF	A/R	X	X	X	X	X	X	X
890	28-22501-5	. Com	A/R	X	X	X	X	X	X	X
900	28-22501-6	. Nav	A/R	X	X	X	X	X	X	X
910	28-22501-7	. Dir-Gyro	A/R	X	X	X	X	X	X	X
920	28-22501-8	. Encoder	A/R	X	X	X	X	X	X	X
930	28-22501-9	. Starter – Engine	A/R	X	X	X	X	X	X	X
940	28-22501-10	. Dimmer – Panel Lt.	A/R	X	X	X	X	X	X	X
950	28-22504-1	. Placard – Fuel Transfer (180 lbs.)	1		X	X	X	X	X	X

UNCONTROLLED COPY WHEN DOWNLOADED OR PRINTED

Visit www.enstromhelicopter.com for instructions to order an original manual and to register for email notification updates.

FIGURE 11-21. PLACARD INSTALLATION

ITEM NUMBER	PART NUMBER	DESCRIPTION	QTY PER ASSY	MODELS AFFECTED						
				F-28A	280	F-28C	280C	F-28F	280F	280FX
960	28-22505-1	. Placard – Fuel Transfer (1/2 Tank)	1	X						
970	28-22506-1	. Placard – Octane & Gal.	1	X	X	X	X	X	X	X
980	28-22507-1	. Placard – Aux. Fuel, C-B	1	X	X	X	X	X	X	X
990	28-22508-1	. Placard – Aux. Fuel, Switch	1	X	X	X	X	X	X	X
1000	28-22540-11	. Placard – Monitor, G.E.M.	1				X	X	X	
1010	28-22543-11	. Placard – Max. EGT	1			X	X	X	X	X
1020	28-22606-1	. Placard – AG Kit (AG Power)	1			X	X	X	X	
1030	28-22607-1	. Placard – AG Kit (Pump)	1			X	X	X	X	
1040	28-22608-1	. Placard – AG Kit (Limitations)	1			X	X	X	X	
1050	28-22609-11	. Placard – AG Kit (Restricted)	1			X	X	X	X	
1060	28-22613-1	. Placard – AG Kit (Fluid Levels)	1			X	X	X	X	
1070	28-22615-15	. Placard – Vne F AG & CH	A/R			X	X	X	X	
1070	28-22615-11	. Placard – Vne (AG Kit) (Replaced by 28-22615-15)	A/R			X	X	X	X	
1080	28-22615-13	. Placard – Vne (AG Kit)	A/R			X	X	X	X	
1090	280-180007-1	. Placard – Manual & Vne	1		X		X			
1100	28-180012-1	. Placard – Vne	1				X			
1110	28-180018-1	. Placard – Manual & Vne	1			X				
1120	28-180021-1	. Placard – Vne (Knots)	1			X				
1130	28-180022-1	. Placard – Vne (Knots)	1		X					
1140	28-180023-1	. Placard – Vne (2350# GW)	1		X		X			
1150	28-180030-1	. Placard – Vne (2350# GW)	1			X		X		
1160	28-180045-13	. Placard – Vne, MPH “A”	1						X	X
1160	28-180045-11	. Placard – Vne Env. A (Replaced by 28-180045-13)	1						X	X
1170	28-180046-13	. Placard – Vne, MPH “B”	1						X	X
1170	28-180046-11	. Placard – Vne Env. B (Replaced by 28-180046-13)	1						X	X
1180	28-180047-13	. Placard – Vne, MPH “C”	1						X	X

UNCONTROLLED COPY WHEN DOWNLOADED OR PRINTED

Visit www.enstromhelicopter.com for instructions to order an original manual and to register for email notification updates.

FIGURE 11-21. PLACARD INSTALLATION

ITEM NUMBER	PART NUMBER	DESCRIPTION	QTY PER ASSY	MODELS AFFECTED						
				F-28A	280	F-28C	280C	F-28F	280F	280FX
1180	28-180047-11	. Placard – Vne Env. C (Replaced by 28-180047-13)	1						X	X
1190	28-180048-13	. Placard – Vne, MPH “D”	1					X	X	X
1190	28-180048-11	. Placard – Vne Env. D (Replaced by 28-180048-13)	1					X	X	X
1200	28-180052-13	. Placard – Vne, MPH “A”	1					X		
1200	28-180052-11	. Placard – Vne Env. A (Replaced by 28-180052-13)	1					X		
1210	28-180053-13	. Placard – Vne, MPH “B”	1					X		
1210	28-180053-11	. Placard – Vne Env. B (Replaced by 28-180053-13)	1					X		
1220	28-180054-13	. Placard – Vne, MPH “C”	1					X		
1220	28-180054-11	. Placard – Vne Env. C (Replaced by 28-180054-13)	1					X		
1230	28-180055-13	. Placard – Vne, MPH “A”	1					X	X	X
1230	28-180055-11	. Placard – Floats Env. A (Replaced by 28-180055-13)	1					X	X	X
1240	28-180056-13	. Placard – Vne, MPH “B”	1					X	X	X
1240	28-180056-11	. Placard – Floats Env. B (Replaced by 28-180056-13)	1					X	X	X
1250	28-180057-13	. Placard – Vne, MPH “D”	1					X	X	X
1250	28-180057-11	. Placard – Floats Env. D (Replaced by 28-180057-13)	1					X	X	X
1260	A421-1	. Placard – Warning	1	X	X	X	X	X	X	X

UNCONTROLLED COPY WHEN DOWNLOADED OR PRINTED

Visit www.enstromhelicopter.com for instructions to order an original manual and to register for email notification updates.

ENSTROM F-28/280 SERIES ILLUSTRATED PARTS CATALOG

SECTION 12

TAIL ROTOR SYSTEM

TABLE OF CONTENTS

	Cover Page	12-0
	Table of Contents	12-0
12-1A	Tail Rotor Transmission Assembly	12-0.2
12-1B	Flex Coupling Installation	12-1
12-2A	Tail Rotor Hanger Bearing Installation	12-3
12-2B	Rotor Tachometer Assembly	12-4
12-3	Tail Rotor Pedal Assembly	12-6
12-3A	Bellcrank Pivot Assembly	12-7
12-3B	Push Rod & Tie Rod Assembly	12-8
12-3C	Push Rod & Tie Rod Assembly	12-8
12-3D	Tie Rod & Cable Attachment	12-9
12-3E	Tie Rod & Cable Attachment	12-9
12-4	Tail Rotor Cables	12-12
12-5	Tail Rotor Pitch Link Assembly	12-14
12-6A	Tail Rotor Mechanical Controls (Right Hand Gearbox)	12-16
12-6B	Tail Rotor Mechanical Controls (Left Hand Gearbox)	12-18.2
12-7	28-15018-3 Tail Rotor Assembly (“A” Models)	12-19
12-8	28-150000-7, -10 Tail Rotor Assembly (“C” Models)	12-21
12-9	28-150050-2 Tail Rotor Assembly (“C” & “F” Models)	12-23
12-10	28-150079-1 Tail Rotor Assembly (“C” and “F” Models)	12-26

UNCONTROLLED COPY WHEN DOWNLOADED OR PRINTED

Visit www.enstromhelicopter.com for instructions to order an original manual and to register for email notification updates.

INTENTIONALLY LEFT BLANK

UNCONTROLLED COPY WHEN DOWNLOADED OR PRINTED
Visit www.enstromhelicopter.com for instructions to order an original manual and to register for email notification updates.

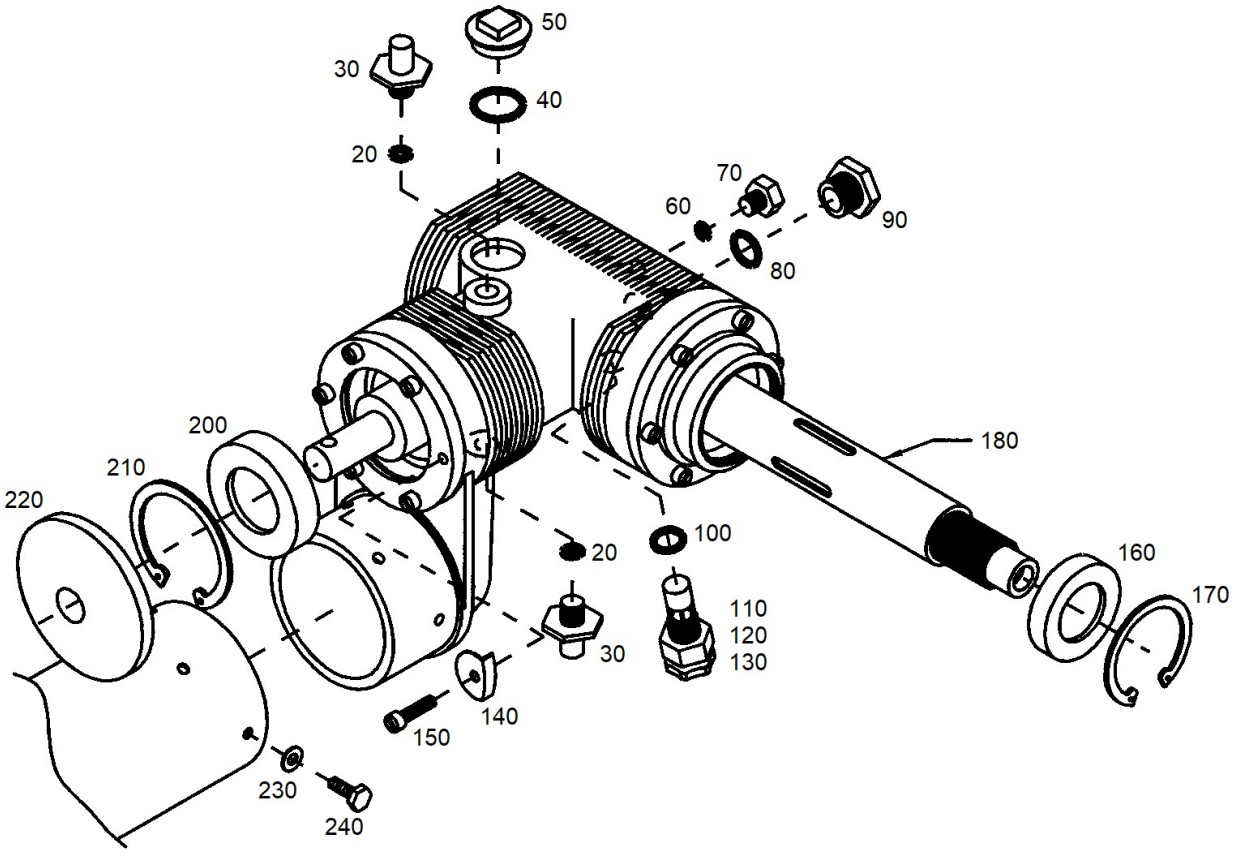

FIGURE 12-1A. TAIL ROTOR TRANSMISSION ASSEMBLY

UNCONTROLLED COPY WHEN DOWNLOADED OR PRINTED

Visit www.enstromhelicopter.com for instructions to order an original manual and to register for email notification updates.

FIGURE 12-1A. TAIL ROTOR TRANSMISSION ASSEMBLY

ITEM NUMBER	PART NUMBER	DESCRIPTION	QTY PER ASSY	MODELS AFFECTED						
				F-28A	280	F-28C	280C	F-28F	280F	280FX
–10	28-13525-5	. Tail Rotor Transmission Assembly	1	X	X	X	X	X	X	
10A*	28-13525-7	. Tail Rotor Transmission Assembly	1					X		X
20	MS28778-3	. . O-Ring	2	X	X	X	X	X	X	X
30	28-135003-11	. . Bolt	2	X	X	X	X	X	X	X
30	28-135003-1	. . Bolt (Superseded by 28-135003-11)	2	X	X	X	X	X	X	X
40	MS28775-018	. . O-Ring	1	X	X	X	X	X	X	X
50	28-13515-3	. . Plug	1	X	X	X	X	X	X	X
60	MS28778-2	. . O-Ring	1	X	X	X	X	X	X	X
70	AN814-2DL	. . Plug	1	X	X	X	X	X	X	X
80	MS28775-113	. . O-Ring	1	X	X	X	X	X	X	X
90	S83BZ-2	. . Sight Plug	1	X	X	X	X	X	X	X
100	MS35769-9	. . Gasket	1	X	X	X	X	X	X	X
–110	CD7L	. . Chip Detector (Used with 28-13525-5)	1	X	X	X	X	X	X	
110A	K94RA	. . Chip Detector (Used with 28-13525-7)	1					X		X
120	M83248/1-008	. . O-Ring (Alternate)	1	X	X	X	X	X	X	X
130	21FA-540	. . Nut	1	X	X	X	X	X	X	X
140**	28-13531-11	. . Tab	2	X	X	X	X	X	X	X
150	NAS1351-3H10P	. . Screw	12	X	X	X	X	X	X	X
160	28-13532-11	. . Seal	1	X	X	X	X	X	X	X
170	N5000-175-PP	. . Retaining Ring	1	X	X	X	X	X	X	X
180	28-13511-11	. . Spacer	1	X	X	X	X	X	X	X
–190	28-13145-1	. . Placard	1	X	X	X	X	X	X	X
200‡	1539-001	. Seal	1	X	X	X	X	X	X	X
210‡	N5000-206-PP	. Retaining Ring	1	X	X	X	X	X	X	X
220‡	28-16399-13	. Slinger	1	X	X	X	X	X	X	X
230†	NAS1149F0332P	. Washer	6	X	X	X	X	X	X	X
230†	AN960-10L	. Washer (Alternate)	6	X	X	X	X	X	X	X

UNCONTROLLED COPY WHEN DOWNLOADED OR PRINTED

Visit www.enstromhelicopter.com for instructions to order an original manual and to register for email notification updates.

FIGURE 12-1A. TAIL ROTOR TRANSMISSION ASSEMBLY

ITEM NUMBER	PART NUMBER	DESCRIPTION	QTY PER ASSY	MODELS AFFECTED						
				F-28A	280	F-28C	280C	F-28F	280F	280FX
240†	NAS6603H1	. Bolt	6	X	X	X	X	X	X	X
240†	AN3H3A	. Bolt (Superseded by NAS6603H1)	6	X	X	X	X	X	X	X
–250†	MS20995C32	. Safety Wire	A/R	X	X	X	X	X	X	X

* Available as a remanufactured part (-R).

** Omitted if retaining ring is present (Item 210).

‡ Part called out in P/N 28-13504-3 assembly.

† Part called out in P/N 28-16398 installation.

UNCONTROLLED COPY WHEN DOWNLOADED OR PRINTED

Visit www.enstromhelicopter.com for instructions to order an original manual and to register for email notification updates.

INTENTIONALLY LEFT BLANK

UNCONTROLLED COPY WHEN DOWNLOADED OR PRINTED
Visit www.enstromhelicopter.com for instructions to order an original manual and to register for email notification updates.

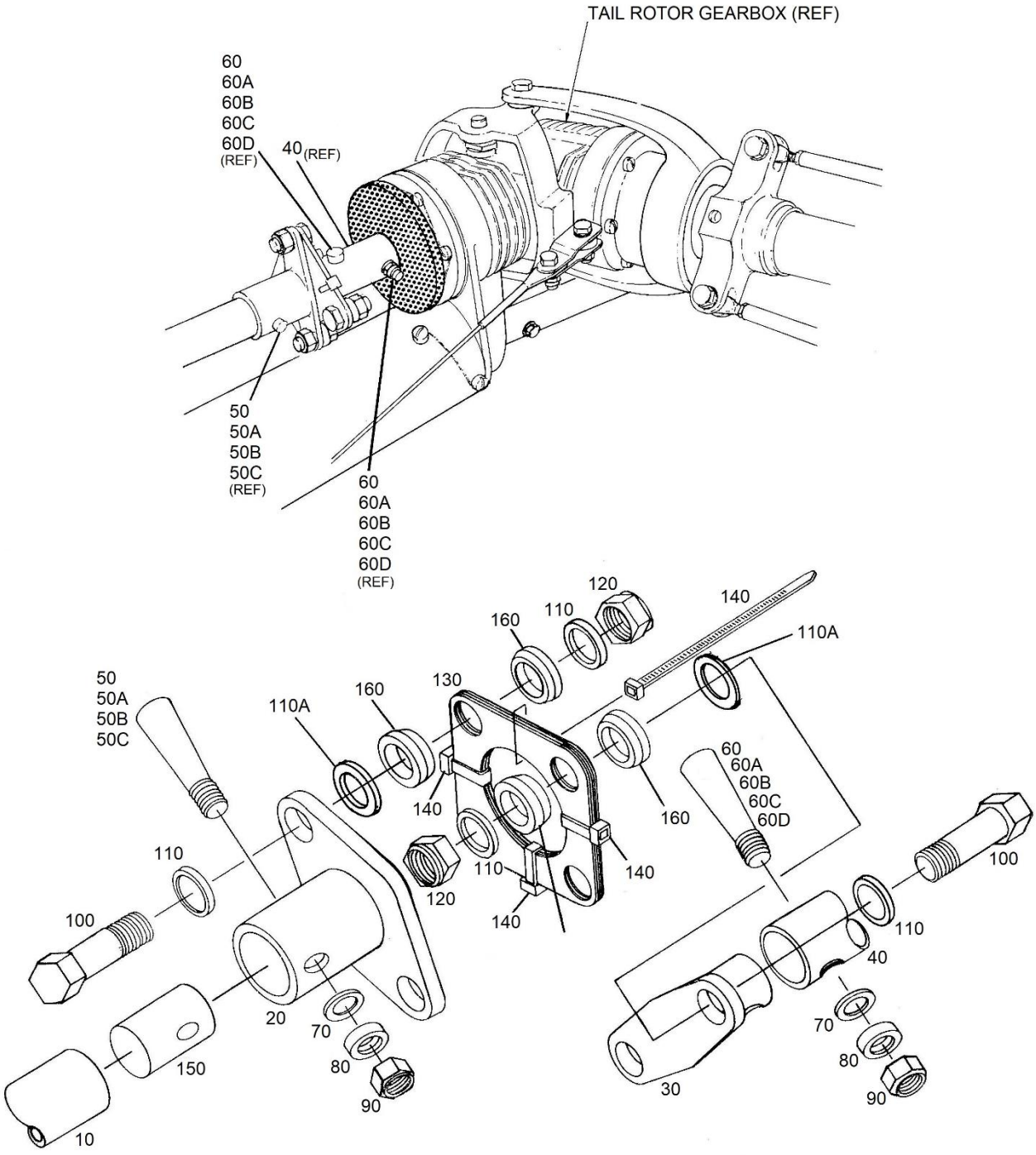

FIGURE 12-1B. FLEX COUPLING INSTALLATION

UNCONTROLLED COPY WHEN DOWNLOADED OR PRINTED

Visit www.enstromhelicopter.com for instructions to order an original manual and to register for email notification updates.

FIGURE 12-1B. FLEX COUPLING INSTALLATION

ITEM NUMBER	PART NUMBER	DESCRIPTION	QTY PER ASSY	MODELS AFFECTED						
				F-28A	280	F-28C	280C	F-28F	280F	280FX
–5*	28-13617-903	Tail Rotor Drive Shaft Assembly	REF	X	X			X	X	X
–5A●*	28-13617-905	Tail Rotor Drive Shaft Assembly	REF			X	X			
10	28-13618-1	. . Tail Rotor Drive Shaft	1	X	X	X	X	X	X	X
20**	28-13613-1	. . Coupling Hub	2	X	X	X	X	X	X	X
30	28-13614-1	. Coupling Hub	1	X	X	X	X	X	X	X
40	28-13607-1	. Sleeve	1	X	X	X	X	X	X	X
50**	AN386-2-8A	. . Taper Pin (Head Dia. .296”/7.5 mm) (Grip 1.00”/25.4 mm)	2	X	X	X	X	X	X	X
50A	28-13623-11	. O/S Taper Pin (Head Dia. .305”/7.6 mm) (Grip 1.12”/28.4 mm)	A/R	X	X	X	X	X	X	X
50A	28-13600-6	. O/S Taper Pin (Superseded by 28-13623-11)	A/R	X	X	X	X	X	X	X
50B	28-13623-13	. O/S Taper Pin (Head Dia. .310”/7.8 mm) (Grip 1.12”/28.4 mm)	A/R	X	X	X	X	X	X	X
50B	28-13600-7	. O/S Taper Pin (Superseded by 28-13623-13)	A/R	X	X	X	X	X	X	X
50C	28-13623-17	. O/S Taper Pin (Head Dia. .318”/8 mm) (Grip 1.12”/28.4 mm)	A/R	X	X	X	X	X	X	X
50C	28-13600-8	. O/S Taper Pin (Superseded by 28-13623-17)	A/R	X	X	X	X	X	X	X
60	AN386-2-7A	. Taper Pin (Head Dia. .296”/7.5 mm) (Grip 1.00”/25.4 mm)	1	X	X	X	X	X	X	X
60A	28-13623-25	. O/S Taper Pin (Head Dia. .302”/7.6 mm) (Grip 1.00”/25.4 mm)	A/R	X	X	X	X	X	X	X
60A	28-13600-3	. O/S Taper Pin (Superseded by 28-13623-25)	A/R	X	X	X	X	X	X	X
60B	28-13623-27	. O/S Taper Pin (Head Dia. .307”/7.7 mm) (Grip 1.00”/25.4 mm)	A/R	X	X	X	X	X	X	X
60B	28-13600-4	. O/S Taper Pin (Superseded by 28-13623-27)	A/R	X	X	X	X	X	X	X

UNCONTROLLED COPY WHEN DOWNLOADED OR PRINTED

Visit www.enstromhelicopter.com for instructions to order an original manual and to register for email notification updates.

FIGURE 12-1B. FLEX COUPLING INSTALLATION

ITEM NUMBER	PART NUMBER	DESCRIPTION	QTY PER ASSY	MODELS AFFECTED						
				F-28A	280	F-28C	280C	F-28F	280F	280FX
60C	28-13623-29	. O/S Taper Pin (Head Dia. .314"/7.9 mm) (Grip 1.00"/25.4 mm)	A/R	X	X	X	X	X	X	X
60C	28-13600-5	. O/S Taper Pin (Superseded by 28-13623-29)	A/R	X	X	X	X	X	X	X
60D	28-13623-31	. O/S Taper Pin (Head Dia. .316"/8 mm) (Grip 1.00"/25.4 mm)	A/R	X	X	X	X	X	X	X
70	NAS1149F0363P	. Washer	2	X	X	X	X	X	X	X
70	AN960-10	. Washer (Alternate)	2	X	X	X	X	X	X	X
80	AN975-3	. . Washer	2	X	X	X	X	X	X	X
90**	MS21044N3	. . Nut	2	X	X	X	X	X	X	X
90**	AN365-1032A	. . Nut (Alternate)	3	X	X	X	X	X	X	X
100	NAS6604D7	. Bolt	4	X	X	X	X	X	X	X
100	AN4-7A	. Bolt (Superseded by NAS6604D7)	4	X	X	X	X	X	X	X
110	AN960C416L	. Washers	8	X	X	X	X	X	X	X
110A	AN960C416L	. Washers (For Alignment of Flex Plates)	A/R	X	X	X	X	X	X	X
120	MS21044N4	. Nut	4	X	X	X	X	X	X	X
120	AN365-428A	. Nut (Superseded by MS21044N4)	4	X	X	X	X	X	X	X
130Δ	28-01041-1	. Flex Pack Kit	1	X	X	X	X	X	X	X
130	28-01041-3	. Flex Pack Assembly	1	X	X	X	X	X	X	X
130	A005-1991	. Flex Pack (Superseded by 28-01041-3)	1	X	X	X	X	X	X	X
140	SST1.5I-M	. Cable Tie	4	X	X	X	X	X	X	X
150**	28-13619-1	. . Plug	2	X	X	X	X	X	X	X
160	28-13621-13	. Washer	8	X	X	X	X	X	X	X
160	28-13621-11	. Washer (Replaced by 28-13621-13)	8	X	X	X	X	X	X	X

UNCONTROLLED COPY WHEN DOWNLOADED OR PRINTED

Visit www.enstromhelicopter.com for instructions to order an original manual and to register for email notification updates.

*	Drive shaft assembly including forward and aft hub assemblies. Included parts indented where noted by double dot.
**	Quantity as ordered under P/N 28-13617-903/-905. (Otherwise, Items 2 and 16 are Qty 1; Item 9 is Qty 3.)
•	Special use only, as determined by Customer Service. (Dimension to transmission input shaft .40”/.38”.)
Δ	Kit includes P/N 28-01041-3 (Qty 1) and P/N 28-13621-13 (Qty 8).

UNCONTROLLED COPY WHEN DOWNLOADED OR PRINTED

Visit www.enstromhelicopter.com for instructions to order an original manual and to register for email notification updates.

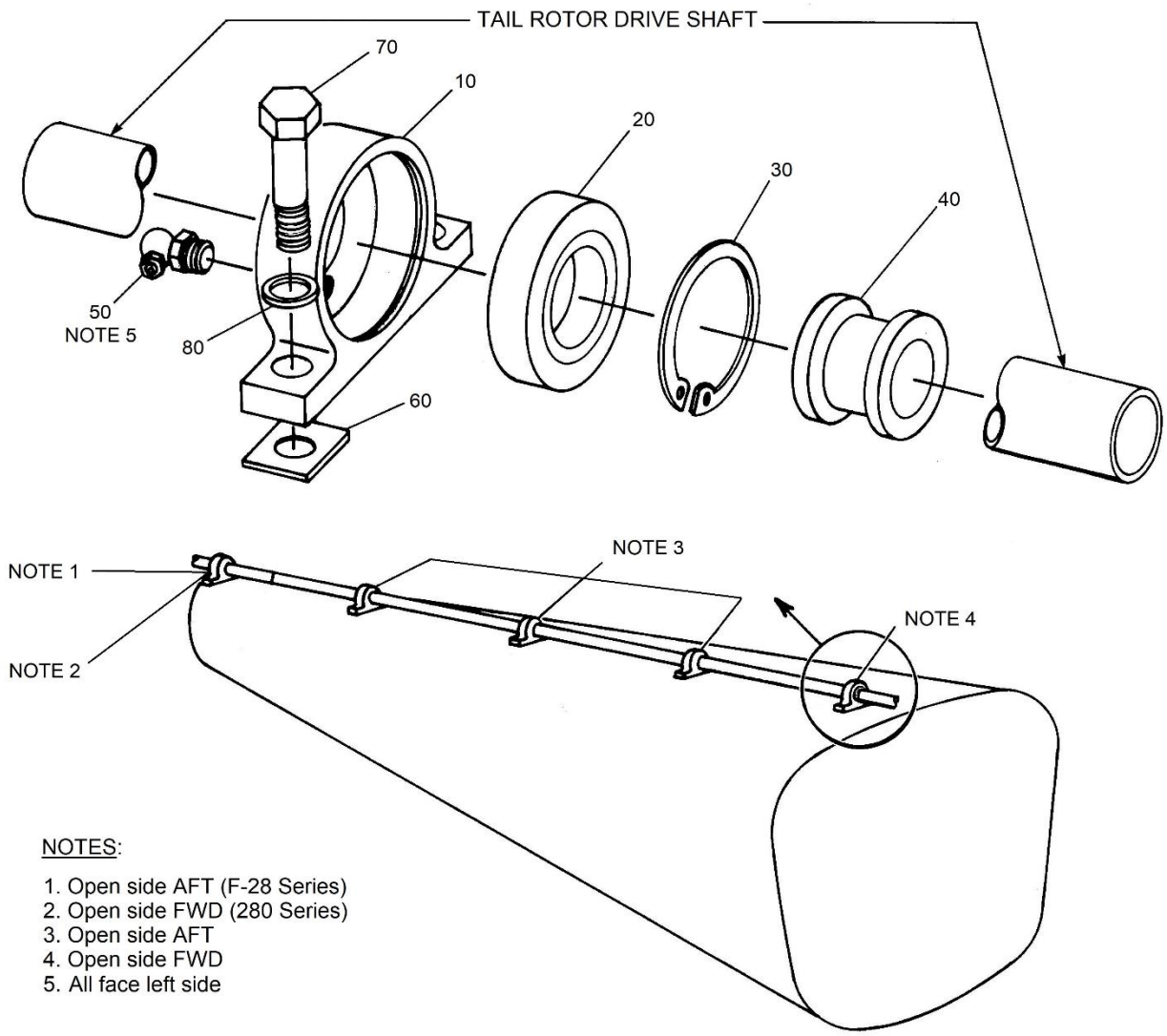

FIGURE 12-2A. TAIL ROTOR HANGER BEARING INSTALLATION

UNCONTROLLED COPY WHEN DOWNLOADED OR PRINTED

Visit www.enstromhelicopter.com for instructions to order an original manual and to register for email notification updates.

FIGURE 12-2A. TAIL ROTOR HANGER BEARING INSTALLATION

ITEM NUMBER	PART NUMBER	DESCRIPTION	QTY PER ASSY	MODELS AFFECTED						
				F-28A	280	F-28C	280C	F-28F	280F	280FX
–5	28-13617-902	. Bearing Housing Assembly	5	X	X	X	X	X	X	X
10	28-13611-1	. . Bearing Housing	1	X	X	X	X	X	X	X
20	ECD015-11	. . Bearing	1	X	X	X	X	X	X	X
30	N5000-187-ZD	. . Snap Ring	1	X	X	X	X	X	X	X
40	28-13606-1	. . Bushing	1	X	X	X	X	X	X	X
50	1637-B	. . Lube Fitting	1	X	X	X	X	X	X	X
–55*	28-11238-1	. Bracket Assembly	1							X
60	28-13605-3	. Shim .003	A/R	X	X	X	X	X	X	X
60	28-13605-4	. Shim .007	A/R	X	X	X	X	X	X	X
60	28-13605-5	. Shim .020	A/R	X	X	X	X	X	X	X
60	28-13605-6	. Shim .032	A/R	X	X	X	X	X	X	X
60	28-13605-7	. Shim .063	A/R	X	X	X	X	X	X	X
60	28-13605-8	. Shim .025	A/R	X	X	X	X	X	X	X
70	AN3-5A	. Bolt (Length AR)	8	X	X	X	X	X	X	X
70	NAS6603D4	. Bolt	2	X	X	X	X	X	X	X
70A**	AN3H5A	. Bolt (Length AR) (Superseded by NAS6603D4)	2	X	X	X	X	X	X	X
80	NAS1149C0332R	. Washer	10	X	X	X	X	X	X	X
80	AN960-C10L	. Washer (Alternate)	10	X	X	X	X	X	X	X

* Install under aft-most bearing housing on 280FX models for drive shaft cover.

** Installed at aft-most bearing housing.

UNCONTROLLED COPY WHEN DOWNLOADED OR PRINTED

Visit www.enstromhelicopter.com for instructions to order an original manual and to register for email notification updates.

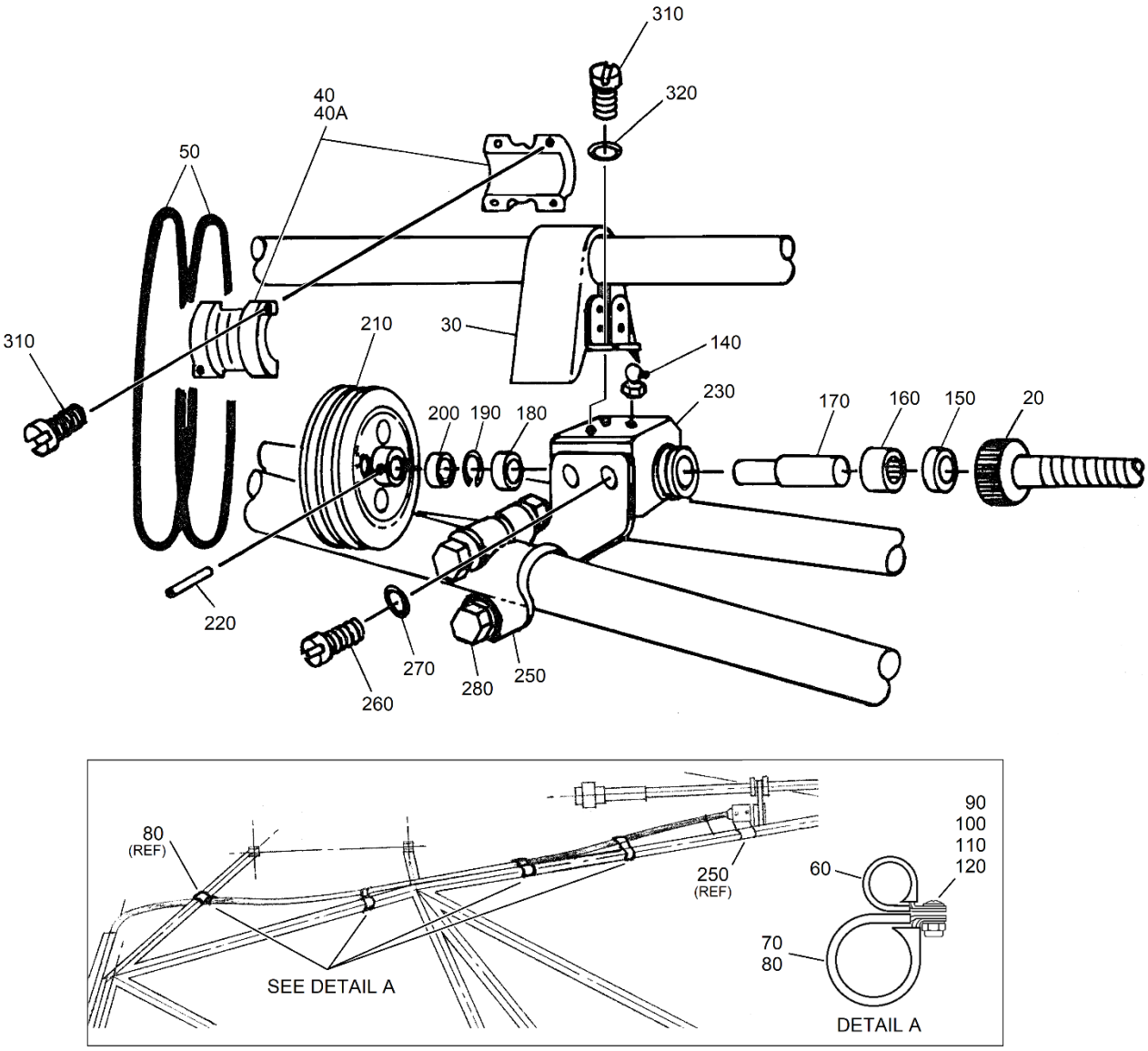

FIGURE 12-2B. ROTOR TACHOMETER ASSEMBLY

UNCONTROLLED COPY WHEN DOWNLOADED OR PRINTED
Visit www.enstromhelicopter.com for instructions to order an original manual and to register for email notification updates.

FIGURE 12-2B. ROTOR TACHOMETER ASSEMBLY

ITEM NUMBER	PART NUMBER	DESCRIPTION	QTY PER ASSY	MODELS AFFECTED						
				F-28A	280	F-28C	280C	F-28F	280F	280FX
–10	28-18020-1	Tach Drive Assembly	REF	X	X			X	X	X
–10A	28-18020-3	Tach Drive Assembly (Inactive)	REF			X	X			
20	ECD108-3	. Rotor Tach Cable	1	X	X	X	X	X	X	X
20	12528Y-A164	. Rotor Tach Cable (Superseded by ECD108-3)	1	X	X	X	X	X	X	X
30*	28-18031-3	. Cover	1	X	X	X	X	X	X	X
30	28-18031-1	. Cover (Replaced by 28-18031-3)	1	X	X	X	X	X	X	X
40	28-18027-1	. Driver Pulley	1	X	X			X	X	X
40A	28-180010-11	. Driver Pulley (Inactive)	1			X	X			
50	NAS1611-333A	. O-Ring	2	X	X	X	X	X	X	X
60	MS21919WDG-5	. Clamp	4	X	X	X	X	X	X	X
70	MS21919WDG-14	. Clamp	3	X	X	X	X	X	X	X
80	MS21919WDG-12	. Clamp	1	X	X	X	X	X	X	X
90	MS35206-245	. Screw	4	X	X	X	X	X	X	X
90	AN515-8R8	. Screw (Superseded by MS35206-245)	4	X	X	X	X	X	X	X
100	NAS1149FN832P	. Washer	8	X	X	X	X	X	X	X
100	AN960-8	. Washer (Alternate)	8	X	X	X	X	X	X	X
110	AN935-8	. Lock Washer	4	X	X	X	X	X	X	X
120	MS35649-282	. Nut	4	X	X	X	X	X	X	X
120	AN340-832	. Nut (Superseded by MS35649-282)	4	X	X	X	X	X	X	X
–130	28-18020-5	. Tach Assembly	REF	X	X	X	X	X	X	X
140	1911-B1	. . Lube Fitting	1	X	X	X	X	X	X	X
150	1886	. . Seal, Type TC	1	X	X	X	X	X	X	X
150	B-44-28-2	. . Seal, Type B (Alternate)	1	X	X	X	X	X	X	X
160	B-710	. . Bearing	1	X	X	X	X	X	X	X

UNCONTROLLED COPY WHEN DOWNLOADED OR PRINTED

Visit www.enstromhelicopter.com for instructions to order an original manual and to register for email notification updates.

FIGURE 12-2B. ROTOR TACHOMETER ASSEMBLY

ITEM NUMBER	PART NUMBER	DESCRIPTION	QTY PER ASSY	MODELS AFFECTED						
				F-28A	280	F-28C	280C	F-28F	280F	280FX
170	28-18024-5	. . Shaft Assembly	1	X	X	X	X	X	X	X
170	28-18024-1	. . Shaft Assembly (Superseded by 28-18024-5)	1	X	X	X	X	X	X	X
180	ECD066-1	. . Bearing	1	X	X	X	X	X	X	X
190	N5000-62-PP	. . Snap Ring	1	X	X	X	X	X	X	X
200	28-18034-1	. . Spacer	1	X	X	X	X	X	X	X
210	28-18030-1	. . Driven Pulley	1	X	X	X	X	X	X	X
220	79012-062-0500	. . Roll Pin	1	X	X	X	X	X	X	X
230	28-18026-3	. . Tach Housing, Output	1	X	X	X	X	X	X	X
230	28-18026-1	. . Tach Housing, Output (Superseded by 28-18026-3)	1	X	X	X	X	X	X	X
–240	28-18020-7	. Tach and Bracket Assembly	REF	X	X	X	X	X	X	X
250	28-18028-1	. . Tach Bracket	1	X	X	X	X	X	X	X
260	NK501-10-6	. . Screw	4	X	X	X	X	X	X	X
260	NP501-10-6	. . Screw (Alternate)	4	X	X	X	X	X	X	X
270	NAS1149F0363P	. . Washer	4	X	X	X	X	X	X	X
270	AN960-10	. . Washer (Alternate)	4	X	X	X	X	X	X	X
280	NAS6603-12	. . Bolt	4	X	X	X	X	X	X	X
280	AN3-11A	. . Bolt (Superseded by NAS6603-12)	4	X	X	X	X	X	X	X
–290	NAS1149F0363P	. . Washer	8	X	X	X	X	X	X	X
–300	MS21044N3	. . Nut	4	X	X	X	X	X	X	X
310	NK500-8-X	. Screw (Length A/R)	6	X	X	X	X	X	X	X
310	NP500-8-X	. Screw (Length A/R) (Alternate)	6	X	X	X	X	X	X	X
320	NAS1149FN832P	. Washer	2	X	X	X	X	X	X	X
320	AN960-8	. Washer (Alternate)	2	X	X	X	X	X	X	X

* Effective F-28F S/N 883 and subsequent, 280FX 2147 and subsequent. Eligibility All S/N.

UNCONTROLLED COPY WHEN DOWNLOADED OR PRINTED

Visit www.enstromhelicopter.com for instructions to order an original manual and to register for email notification updates.

INTENTIONALLY LEFT BLANK

UNCONTROLLED COPY WHEN DOWNLOADED OR PRINTED
Visit www.enstromhelicopter.com for instructions to order an original manual and to register for email notification updates.

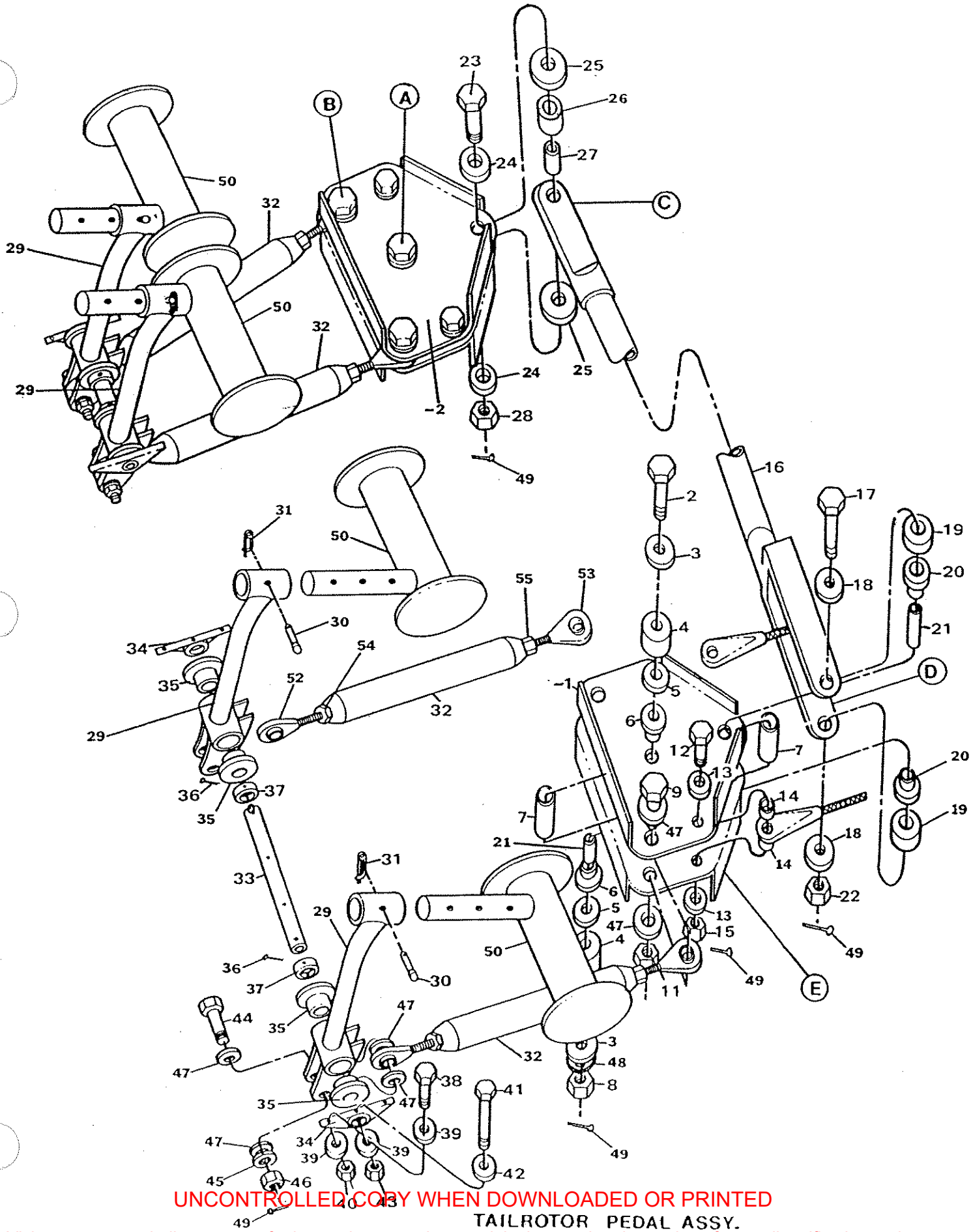

TAILROTOR PEDAL ASSY.

FIGURE 12-3

UNCONTROLLED COPY WHEN DOWNLOADED OR PRINTED
Visit www.enstromhelicopter.com for instructions to order an original manual and to register for email notification updates.

UNCONTROLLED COPY WHEN DOWNLOADED OR PRINTED

Visit www.enstromhelicopter.com for instructions to order an original manual and to register for email notification updates.

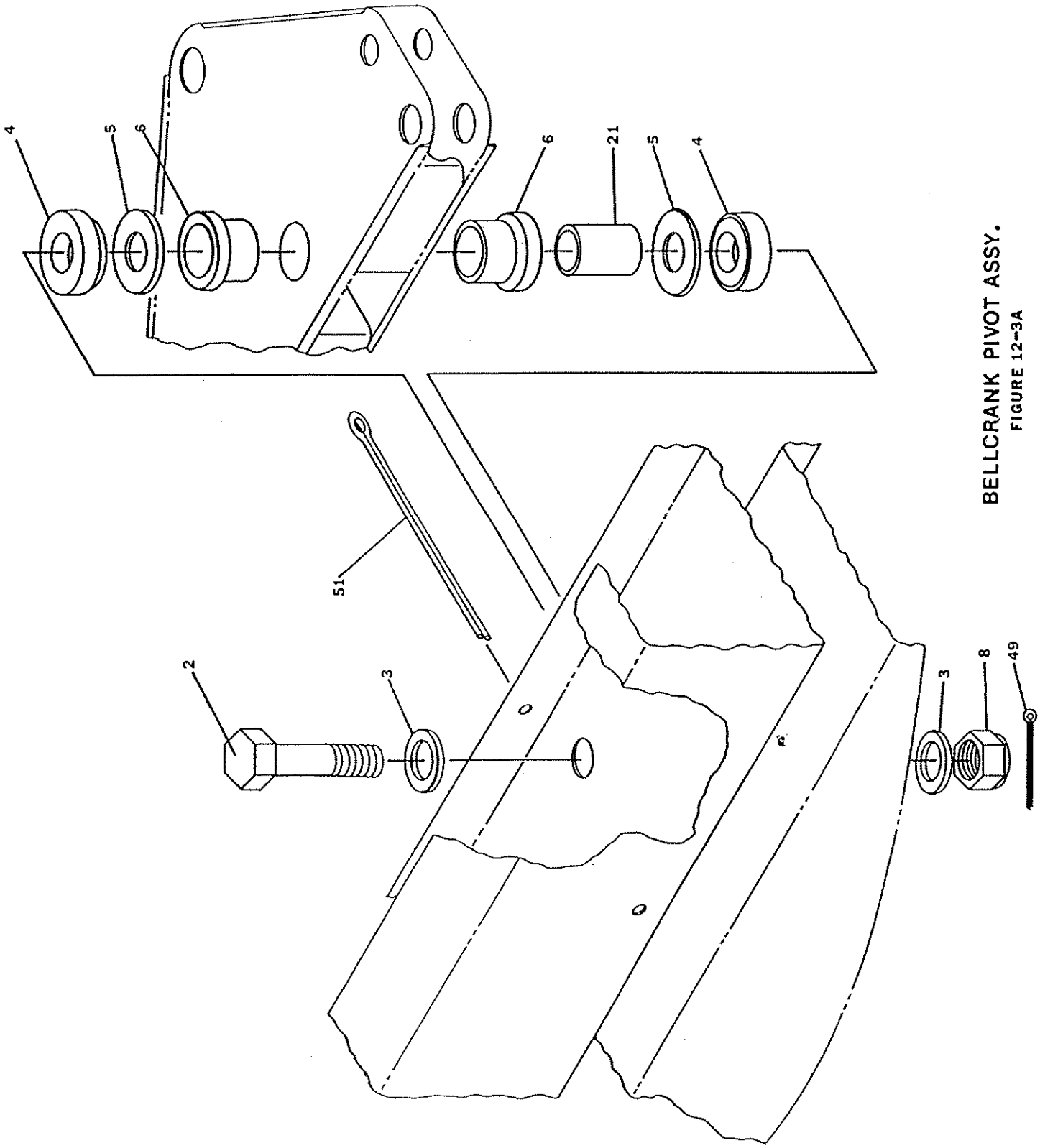

BELLCRANK PIVOT ASSY.
FIGURE 12-3A

UNCONTROLLED COPY WHEN DOWNLOADED OR PRINTED

Visit www.enstromhelicopter.com for instructions to order an original manual and to register for email notification updates.

UNCONTROLLED COPY WHEN DOWNLOADED OR PRINTED

Visit www.enstromhelicopter.com for instructions to order an original manual and to register for email notification updates.

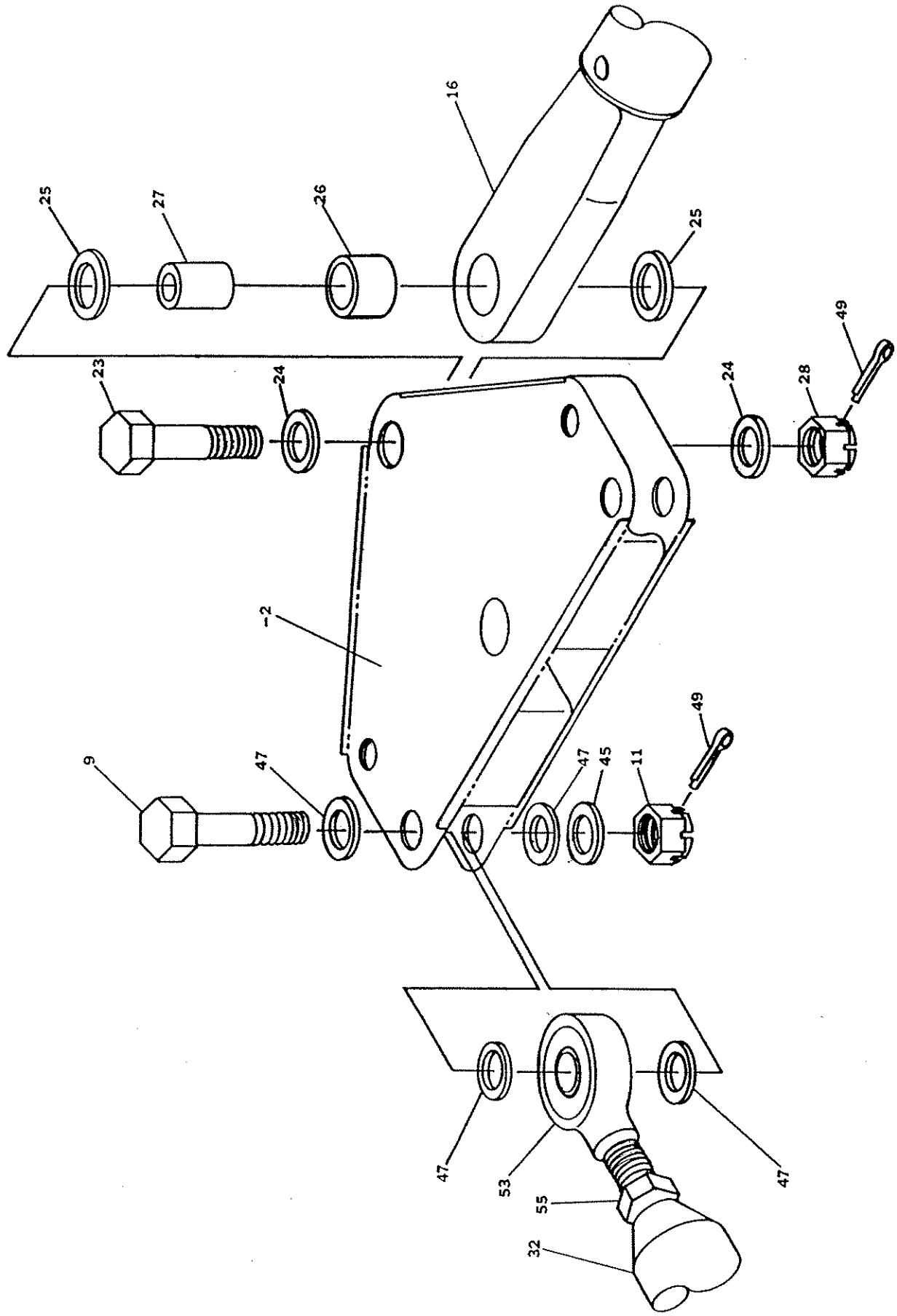

PUSH ROD & TIE ROD ASSY,
FIGURE 12-3B & 3C

UNCONTROLLED COPY WHEN DOWNLOADED OR PRINTED
Visit www.enstromhelicopter.com for instructions to order an original manual and to register for email notification updates.

UNCONTROLLED COPY WHEN DOWNLOADED OR PRINTED

Visit www.enstromhelicopter.com for instructions to order an original manual and to register for email notification updates.

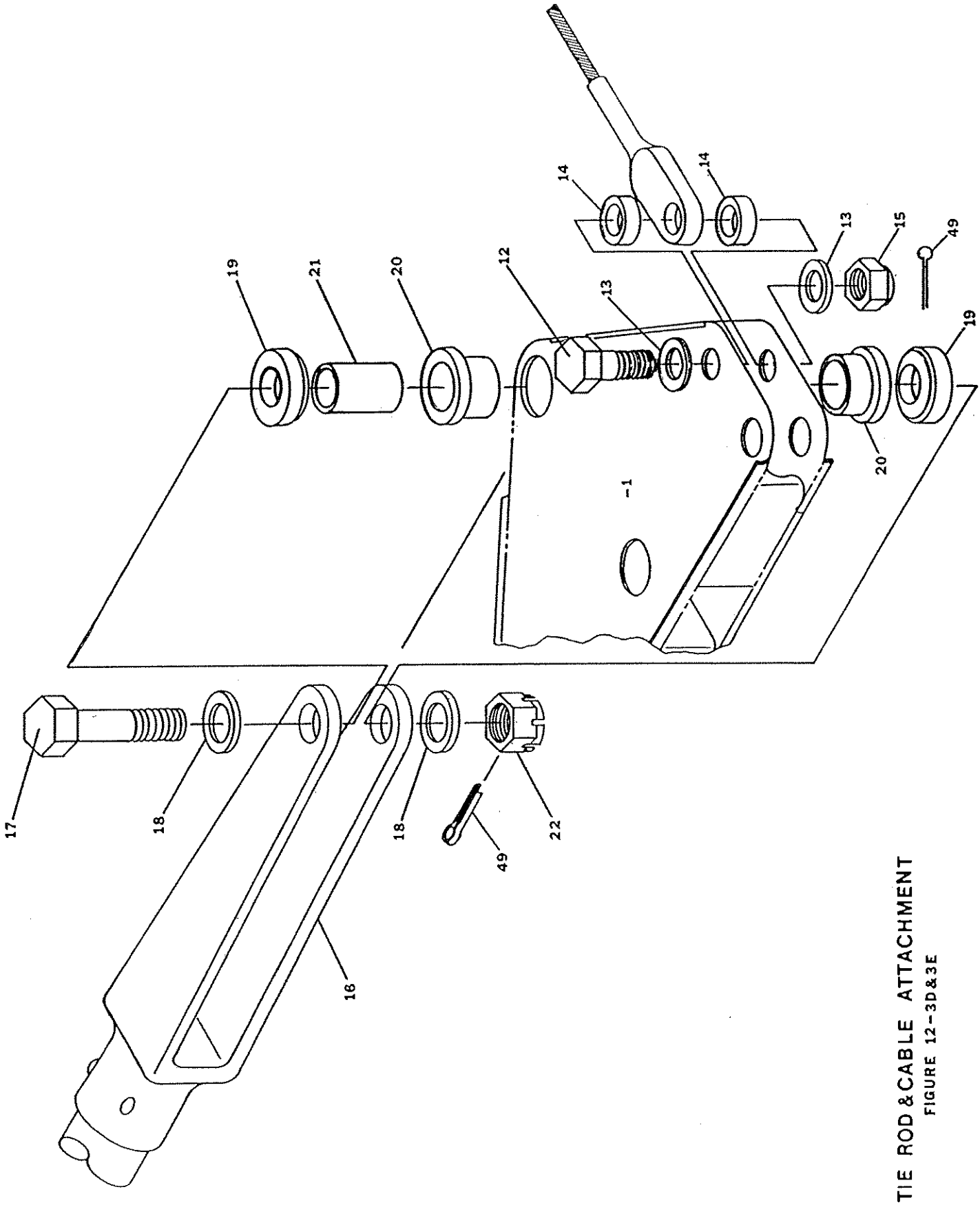

TIE ROD & CABLE ATTACHMENT
FIGURE 12-3D&3E

UNCONTROLLED COPY WHEN DOWNLOADED OR PRINTED

Visit www.enstromhelicopter.com for instructions to order an original manual and to register for email notification updates.

UNCONTROLLED COPY WHEN DOWNLOADED OR PRINTED

Visit www.enstromhelicopter.com for instructions to order an original manual and to register for email notification updates.

Figure 12-3, 3A, 3B, 3C, 3D, & 3E

ITEM NUMBER	PART NUMBER	DESCRIPTION	QTY. PER ASSY.	MODELS AFFECTED								
				F28A	280	F28C	280C	F28F	280F	280FX		
		Tail Rotor Pedal										
		Assembly										
1	28-16338-1 & 2	Bellcrank	1ea.	X	X	X	X	X	X	X		
2	AN4-20	Bolt	2	X	X	X	X	X	X	X		
3	AN960-416L	Washer	4	X	X	X	X	X	X	X		
4	28-16342	Spacer	4	X	X	X	X	X	X	X		
5	1/4"	Harper Washer	4	X	X	X	X	X	X	X		
6	28-16156	Oilite Bearing	4	X	X	X	X	X	X	X		
7	28-16157-3	Spacer	3	X	X	X	X	X	X	X		
8	F12-NE-4753-48	Nut	2	X	X	X	X	X	X	X		
9	AN5-7	Bolt	4	X	X	X	X	X	X	X		
11	F12-NE-4753-054	Nut	4	X	X	X	X	X	X	X		
12	AN3-7	Bolt	2	X	X	X	X	X	X	X		
13	AN960-10	Washer	4	X	X	X	X	X	X	X		
14	28-16349	Spacer	4	X	X	X	X	X	X	X		
15	F12-NE-4753-02	Nut	4	X	X	X	X	X	X	X		
16	28-16339-1	Tie Rod Assembly	1	X	X	X	X	X	X	X		
17	AN4-15	Bolt	1	X	X	X	X	X	X	X		
18	AN960-416L	Washer	2	X	X	X	X	X	X	X		
19	28-16340-1	Spacer	2	X	X	X	X	X	X	X		
20	28-16156-1	Oilite Bearing	2	X	X	X	X	X	X	X		
21	28-16157-3	Spacer	2	X	X	X	X	X	X	X		
22	F12-NE-4753-048	Nut	1	X	X	X	X	X	X	X		
23	AN4-7	Bolt	1	X	X	X	X	X	X	X		
24	AN960-416	Washer	2	X	X	X	X	X	X	X		
25	1/4"	Harper Washer	2	X	X	X	X	X	X	X		
26	28-16339-3	Bushing	1	X	X	X	X	X	X	X		
27	28-16348-1	Spacer	1	X	X	X	X	X	X	X		
28	F12-NE-4753-048	Nut	1	X	X	X	X	X	X	X		
29	28-16321-901	Pedal Leg Assembly	4	X	X	X	X	X	X	X		
30	MS 20392-3C-25	Clevis Pin	4	X	X	X	X	X	X	X		
31	AN416-1	Safety Pin	4	X	X	X	X	X	X	X		
32	28-16154-1	Push Pull Rod	4	X	X	X	X	X	X	X		

UNCONTROLLED COPY WHEN DOWNLOADED OR PRINTED

Visit www.enstromhelicopter.com for instructions to order an original manual and to register for email notification updates.

UNCONTROLLED COPY WHEN DOWNLOADED OR PRINTED

Visit www.enstromhelicopter.com for instructions to order an original manual and to register for email notification updates.

Figure 12-3, 3A, 3B, 3C, 3D & 3E (Cont.)

ITEM NUMBER	PART NUMBER	DESCRIPTION	QTY. PER ASSY.	MODELS AFFECTED								
				F28A	280	F28C	280C	F28F	280F	280FX		
33	28-16334-3	Shaft	2	X	X	X	X	X	X	X		
34	28-16355-4	Bracket	4	X	X	X	X	X	X	X		
35	28-16332-1	Bearings	8	X	X	X	X	X	X	X		
36	AN381-3-18	Cotter Pin	4	X	X	X	X	X	X	X		
37	28-16341-1	Collar	4	X	X	X	X	X	X	X		
38	AN3-4A	Bolt	8	X	X	X	X	X	X	X		
39	AN960-10L	Washer	24	X	X	X	X	X	X	X		
40	AN364-1032	Nut	12	X	X	X	X	X	X	X		
41	AN3-13A	Bolt	4	X	X	X	X	X	X	X		
42	AN960-10L	Washer	8	X	X	X	X	X	X	X		
43	AN364-1032	Nut	4	X	X	X	X	X	X	X		
44	AN5-10	Bolt	4	X	X	X	X	X	X	X		
45	AN960-516	Washer	8	X	X	X	X	X	X	X		
46	F12NE4753-054	Nut	4	X	X	X	X	X	X	X		
47	AN960-516L	Washer	24	X	X	X	X	X	X	X		
48	AN960-416	Washer	11	X	X	X	X	X	X	X		
49	AN-381-2-8	Cotter Pin	12	X	X	X	X	X	X	X		
50	28-16322-1	Pedal	4	X	X	X	X	X	X	X		
51	AN380-4-8	Cotter Pin	2	X	X	X	X	X	X	X		
52	HMLVV-5	Rod End	4	X	X	X	X	X	X	X		
53	HMVV-5	Rod End	4	X	X	X	X	X	X	X		
54	AN316-5L	Check Nut	4	X	X	X	X	X	X	X		
55	AN316-5R	Check Nut	4	X	X	X	X	X	X	X		

UNCONTROLLED COPY WHEN DOWNLOADED OR PRINTED

Visit www.enstromhelicopter.com for instructions to order an original manual and to register for email notification updates.

UNCONTROLLED COPY WHEN DOWNLOADED OR PRINTED

Visit www.enstromhelicopter.com for instructions to order an original manual and to register for email notification updates.

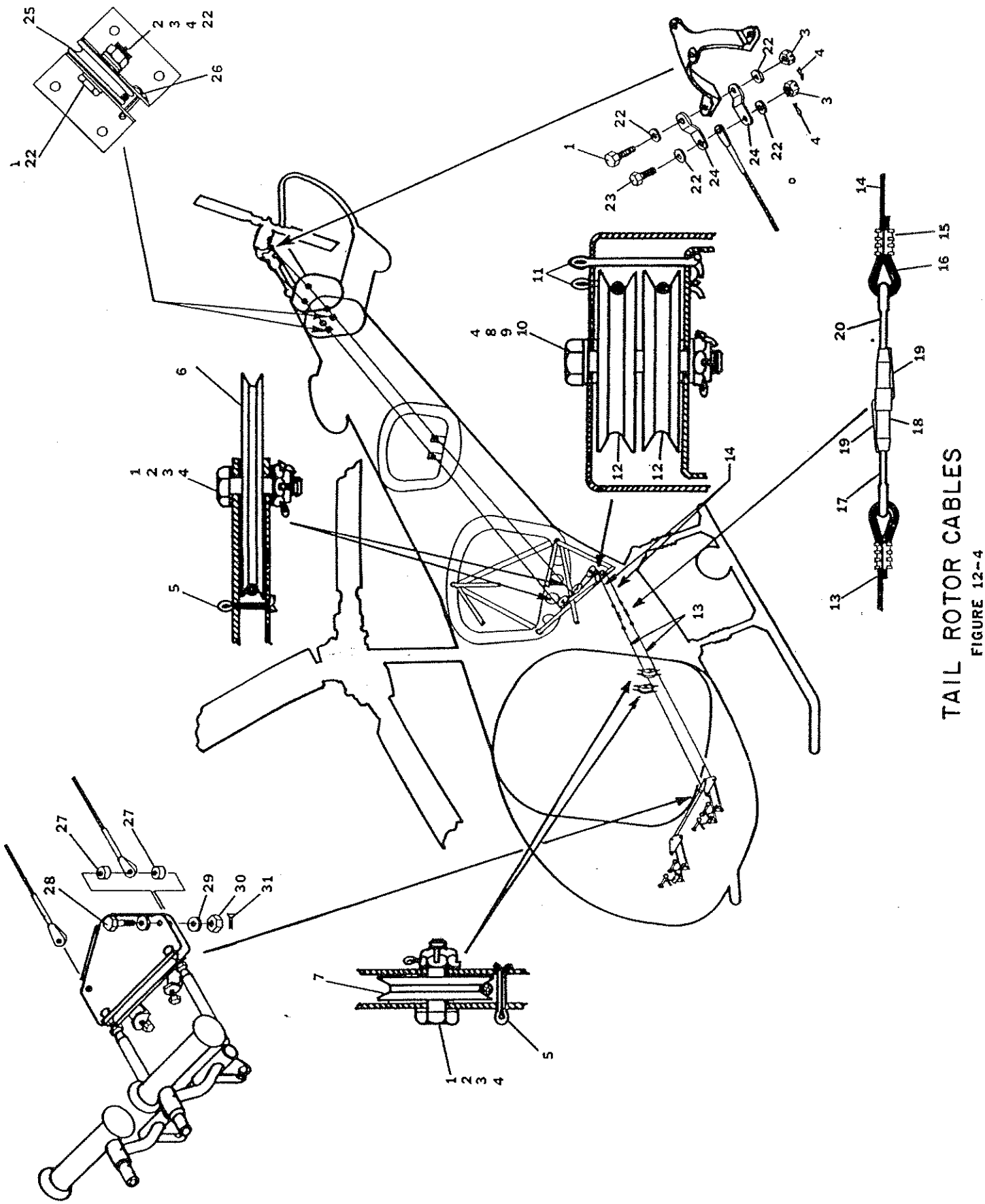

TAIL ROTOR CABLES
FIGURE 12-4

UNCONTROLLED COPY WHEN DOWNLOADED OR PRINTED

Visit www.enstromhelicopter.com for instructions to order an original manual and to register for email notification updates.

UNCONTROLLED COPY WHEN DOWNLOADED OR PRINTED

Visit www.enstromhelicopter.com for instructions to order an original manual and to register for email notification updates.

Figure 12-4

ITEM NUMBER	PART NUMBER	DESCRIPTION	QTY. PER ASSY.	MODELS AFFECTED								
				F28A	280	F28C	280C	F28F	280F	280FX		
1	AN3-6	Bolt	8	X	X	X	X	X	X	X		
2	AN960-10	Washer	12	X	X	X	X	X	X	X		
3	F12-NE-4753-02	Nut	10	X	X	X	X	X	X	X		
4	AN381-2-8	Cotterpin	11	X	X	X	X	X	X	X		
5	AN381-2-12	Cotterpin	4	X	X	X	X	X	X	X		
6	AN210-2B	Pulley	2	X	X	X	X	X	X	X		
7	AN210-1B	Pulley	2	X	X	X	X	X	X	X		
8	AN4-14	Bolt	1	X	X	X	X	X	X	X		
9	AN960-416	Washer	2	X	X	X	X	X	X	X		
10	F12-NE-4753-048	Nut	1	X	X	X	X	X	X	X		
11	AN381-3-22	Cotterpin	2	X	X	X	X	X	X	X		
12	AN210-3B	Pulley	2	X	X	X	X	X	X	X		
13	28-16350-1	Cable Control (Fwd.)	2	X	X	X	X	X	X	X		
14	28-16351-1	Cable Control (Aft)	2	X	X	X	X	X	X	X		
15	18-2-G	Sleeve - Nicropress	4	X	X	X	X	X	X	X		
16	AN100-4	Thimble	4	X	X	X	X	X	X	X		
17	MS21255-3LS	Eye	2	X	X	X	X	X	X	X		
18	MS21251-33S	Turnbuckle	2	X	X	X	X	X	X	X		
19	MS21256-1	Clip	2	X	X	X	X	X	X	X		
20	MS21255-3RS	Eye	2	X	X	X	X	X	X	X		
22	AN960-10L	Washer	10	X	X	X	X	X	X	X		
23	AN3-5	Bolt	2	X	X	X	X	X	X	X		
24	28-16352-1	Link - Control	4	X	X	X	X	X	X	X		
25	AN210-1B	Pulley	2	X	X	X	X	X	X	X		
26	AN381-3-12	Cotterpin	2	X	X	X	X	X	X	X		
27	28-16349-1	Spacer	4	X	X	X	X	X	X	X		
28	AN3-7	Bolt	2	X	X	X	X	X	X	X		
29	AN960-10	Washer	4	X	X	X	X	X	X	X		
30	F12-NE-4753-02	Nut	2	X	X	X	X	X	X	X		
31	AN381-2-8	Cotter Pin	2	X	X	X	X	X	X	X		

UNCONTROLLED COPY WHEN DOWNLOADED OR PRINTED

Visit www.enstromhelicopter.com for instructions to order an original manual and to register for email notification updates.

UNCONTROLLED COPY WHEN DOWNLOADED OR PRINTED

Visit www.enstromhelicopter.com for instructions to order an original manual and to register for email notification updates.

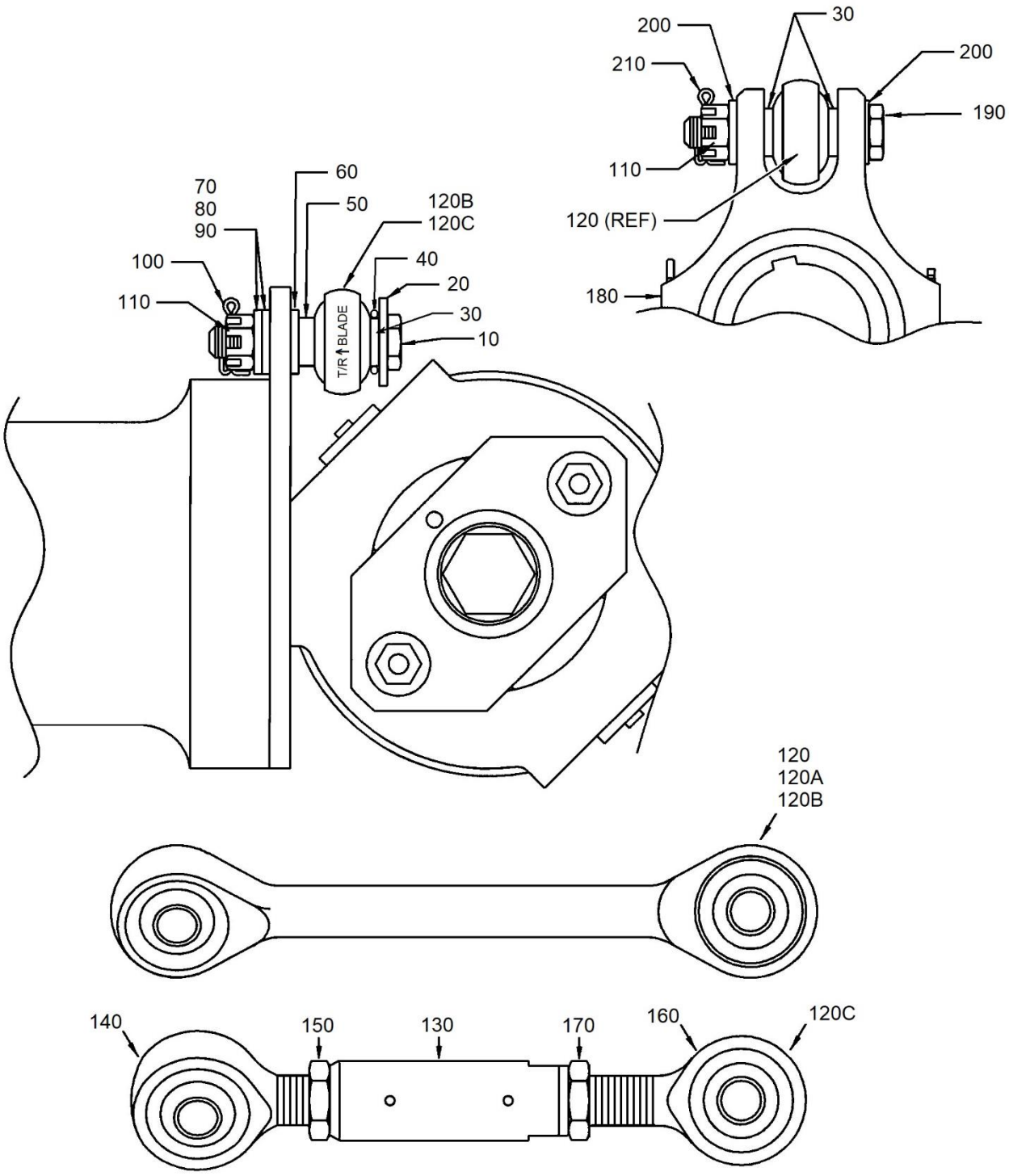

FIGURE 12-5. TAIL ROTOR PITCH LINK ASSEMBLY

UNCONTROLLED COPY WHEN DOWNLOADED OR PRINTED

Visit www.enstromhelicopter.com for instructions to order an original manual and to register for email notification updates.

FIGURE 12-5. TAIL ROTOR PITCH LINK ASSEMBLY

ITEM NUMBER	PART NUMBER	DESCRIPTION	QTY PER ASSY	MODELS AFFECTED						
				F-28A	280	F-28C	280C	F-28F	280F	280FX
–5	28-16398	Tail Rotor Gear Box with Controls	REF	X	X	X	X	X	X	X
10	NAS6604D15	. Bolt	2	**	**	X	X	X	X	X
10	AN4-13	. Bolt (Superseded by NAS6604D15)	2	**	**	X	X	X	X	X
20	ECD050-11	. Washer	2	**	**	X	X	X	X	X
30	28-16353-5	. Spacer	6	**	**	X	X	X	X	X
40	MS28775-111	. O-Ring	2	**	**	X	X	X	X	X
50	28-16353-3	. Spacer	2	**	**	X	X	X	X	X
60	NAS1149C0463R	. Washer	2	**	**	X	X	X	X	X
60	AN960-416	. Washer (Do not use; Replaced by NAS1149C0463R)	2	**	**	X	X	X	X	X
70*	NAS1149C0463R	. Washer	A/R	**	**	X	X	X	X	X
70	AN960-416	. Washer (Do not use; Replaced by NAS1149C0463R)	A/R	**	**	X	X	X	X	X
80*	NAS1149C0432R	. Washer	A/R	**	**	X	X	X	X	X
90*	ECD050-11	. Washer	A/R	**	**	X	X	X	X	X
90*	1/4 Harper	. Washer (Superseded by ECD050-11)	A/R	**	**	X	X	X	X	X
100	MS24665-1013	. Cotter Pin	2	**	**	X	X	X	X	X
100	AN381-2-8	. Cotter Pin (Superseded by MS24665-1013)	2	**	**	X	X	X	X	X
110	MS17825-4	. Nut	4	**	**	X	X	X	X	X
110	F12NE4753-048	. Nut (Superseded by MS17825-4)	4	**	**	X	X	X	X	X
120‡	28-16391-5	. Tail Rotor Pitch Link Assembly (Preferred)	2	**	**	X	X	X	X	X
120A	28-16391-3	. Tail Rotor Pitch Link Assembly (Alternate)	2	**	**	X	X	X	X	X
120B	28-16391-1	. Tail Rotor Pitch Link Assembly (Inactive)	2	**	**	X	X	X	X	X
120C	28-16398-901	. Tail Rotor Pitch Link Assembly (Alternate)	2	X	X	X	X	X	X	X

UNCONTROLLED COPY WHEN DOWNLOADED OR PRINTED

Visit www.enstromhelicopter.com for instructions to order an original manual and to register for email notification updates.

FIGURE 12-5. TAIL ROTOR PITCH LINK ASSEMBLY

ITEM NUMBER	PART NUMBER	DESCRIPTION	QTY PER ASSY	MODELS AFFECTED						
				F-28A	280	F-28C	280C	F-28F	280F	280FX
130	28-16345-1	. . Barrel	1	X	X	X	X	X	X	X
140	11-691-04	. . Rod End	1	X	X	X	X	X	X	X
150	AN316-5L	. . Nut	1	X	X	X	X	X	X	X
160	01-691-04	. . Rod End	1	X	X	X	X	X	X	X
170	AN316-5R	. . Nut	1	X	X	X	X	X	X	X
180	28-16392-13	. Pitch Change Retainer	1	X	X	X	X	X	X	X
190	NAS6604D17	. Bolt	2	X	X	X	X	X	X	X
190	AN4-14	. Bolt (Superseded by NAS6604D17)	2	X	X	X	X	X	X	X
200	NAS1149F0463P	. Washer	4	X	X	X	X	X	X	X
210	MS24665-151	. Cotter Pin	2	X	X	X	X	X	X	X
210	AN381-2-8	. Cotter Pin (Superseded by MS24665-151)	2	X	X	X	X	X	X	X

* As required for balance.

** Eligible on F-28A and 280 models if updated to left side tail rotor system in accordance with SIL 0159.

‡ Effectivity F-28F S/N 831 and subsequent and 280FX 2142 and subsequent. Retrofittable to F-28 series S/N 509 and subsequent and 280 series 2001 and subsequent.

UNCONTROLLED COPY WHEN DOWNLOADED OR PRINTED

Visit www.enstromhelicopter.com for instructions to order an original manual and to register for email notification updates.

INTENTIONALLY LEFT BLANK

UNCONTROLLED COPY WHEN DOWNLOADED OR PRINTED
Visit www.enstromhelicopter.com for instructions to order an original manual and to register for email notification updates.

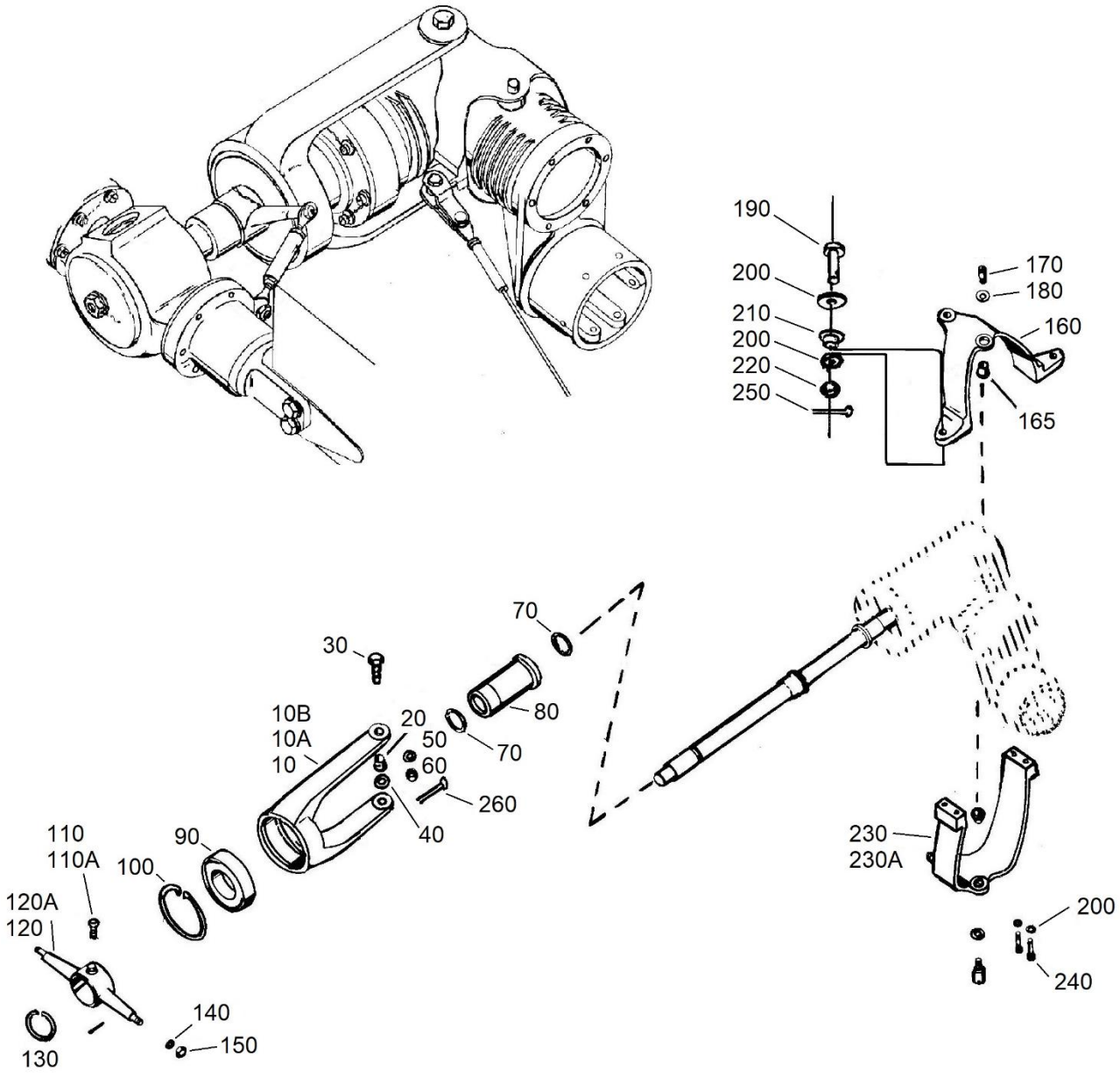

FIGURE 12-6A. TAIL ROTOR MECHANICAL CONTROLS (RIGHT HAND GEARBOX)

UNCONTROLLED COPY WHEN DOWNLOADED OR PRINTED
Visit www.enstromhelicopter.com for instructions to order an original manual and to register for email notification updates.

FIGURE 12-6A. TAIL ROTOR MECHANICAL CONTROLS (RIGHT HAND GEARBOX)

ITEM NUMBER	PART NUMBER	DESCRIPTION	QTY PER ASSY	MODELS AFFECTED						
				F-28A	280	F-28C	280C	F-28F	280F	280FX
–5	28-16300	Tail Rotor Gearbox, Blades, and Controls Installation	REF	X	X					
10	28-16301-4	. Bearing Housing Assembly	1	X	X					
10A*	28-16301-7	. Bearing Housing Assembly	1	X	X					
10B	28-16331-1	. Bearing Housing Assembly	1	X	X					
20	28-16311-1	. . Bushing	2	X	X					
30	28-16310-2	. Bolt	2	X	X					
40	28-16308-1	. Washer	2	X	X					
50	NAS1149F0532P	. Washer	2	X	X					
50	AN960-516L	. Washer (Alternate)	2	X	X					
–55	NAS1149F0563P	. Washer	2	X	X					
–55	AN960-516	. Washer (Alternate)	2	X	X					
60	MS17825-5	. Nut	2	X	X					
60	F12NE-4753-054	. Nut (Superseded by MS17825-5)	2	X	X					
70	TS-023	. Seal	2	X	X					
80	28-16302-1	. Bearing-Control, Pitch	1	X	X					
90	ECD016-11	. Bearing	1	X	X					
100	N5000-268-PP	. Snap Ring	1	X	X					
110	28-16307-1	. Bolt	2	X	X					
110A*	28-16324	. Bolt	2	X	X					
120	28-16320-1	. Retainer - Pitch Link	1	X	X					
120A*	28-16325-2	. Retainer - Pitch Link	1	X	X					
130	5102-137-PP	. Snap Ring	1	X	X					
140	ECD050-11	. Washer	2	X	X					
140	1/4 Harper	. Washer (1/4 ID x 11/16 OD x .050) (Superseded by ECD050-11)	2	X	X					

Visit www.enstromhelicopter.com for instructions to order an original manual and to register for email notification updates.

FIGURE 12-6A. TAIL ROTOR MECHANICAL CONTROLS (RIGHT HAND GEARBOX)

ITEM NUMBER	PART NUMBER	DESCRIPTION	QTY PER ASSY	MODELS AFFECTED						
				F-28A	280	F-28C	280C	F-28F	280F	280FX
150	MS17825-4	. Nut	2	X	X					
150	F12NE-4753-048	. Nut (Superseded by MS17825-4)	2	X	X					
160**▲	28-16313-1	. Bracket	1	X	X					
160A**†	28-16317-1R	. Bracket	1	X	X					
165	28-16311-1	. . Bushing	2	X	X					
170	28-16309-1	. Bolt	2	X	X					
180	28-16308-1	. Washer	2	X	X					
190	NAS6603D6	. Bolt	2	X	X					
190	AN3-6	. Bolt (Superseded by NAS6603D6)	2	X	X					
200	NAS1149F0332P	. Washer	8	X	X					
200	AN960-10L	. Washer (Alternate)	8	X	X					
210	28-16319-1	. . Bushing (Used in Item 160)	2	X	X					
220	MS17825-3	. Nut	2	X	X					
220	F12NE-4753-02	. Nut (Superseded by MS17825-3)	2	X	X					
230**▲	28-16314-1	. Bracket	1	X	X					
230A**†	28-16315-1R	. Bracket	1	X	X					
240	AN503-10-8	. Screw	4	X	X					
250	MS24665-151	. Cotter Pin	6	X	X					
250	AN381-2-8	. Cotter Pin (Superseded by MS24665-151)	6	X	X					

– Not illustrated.

* Preferred components.

** 28-16315-1R and 28-16317-1R may be replaced on F28A, 280, and early “C” models with 28-16314-1 and 28-16313-1 (-110A and -120A are used together -110 and -120 are used together).

▲ Must be replaced/purchased as a matched set.

† Must be replaced/purchased as a matched set.

UNCONTROLLED COPY WHEN DOWNLOADED OR PRINTED

Visit www.enstromhelicopter.com for instructions to order an original manual and to register for email notification updates.

INTENTIONALLY LEFT BLANK

UNCONTROLLED COPY WHEN DOWNLOADED OR PRINTED
Visit www.enstromhelicopter.com for instructions to order an original manual and to register for email notification updates.

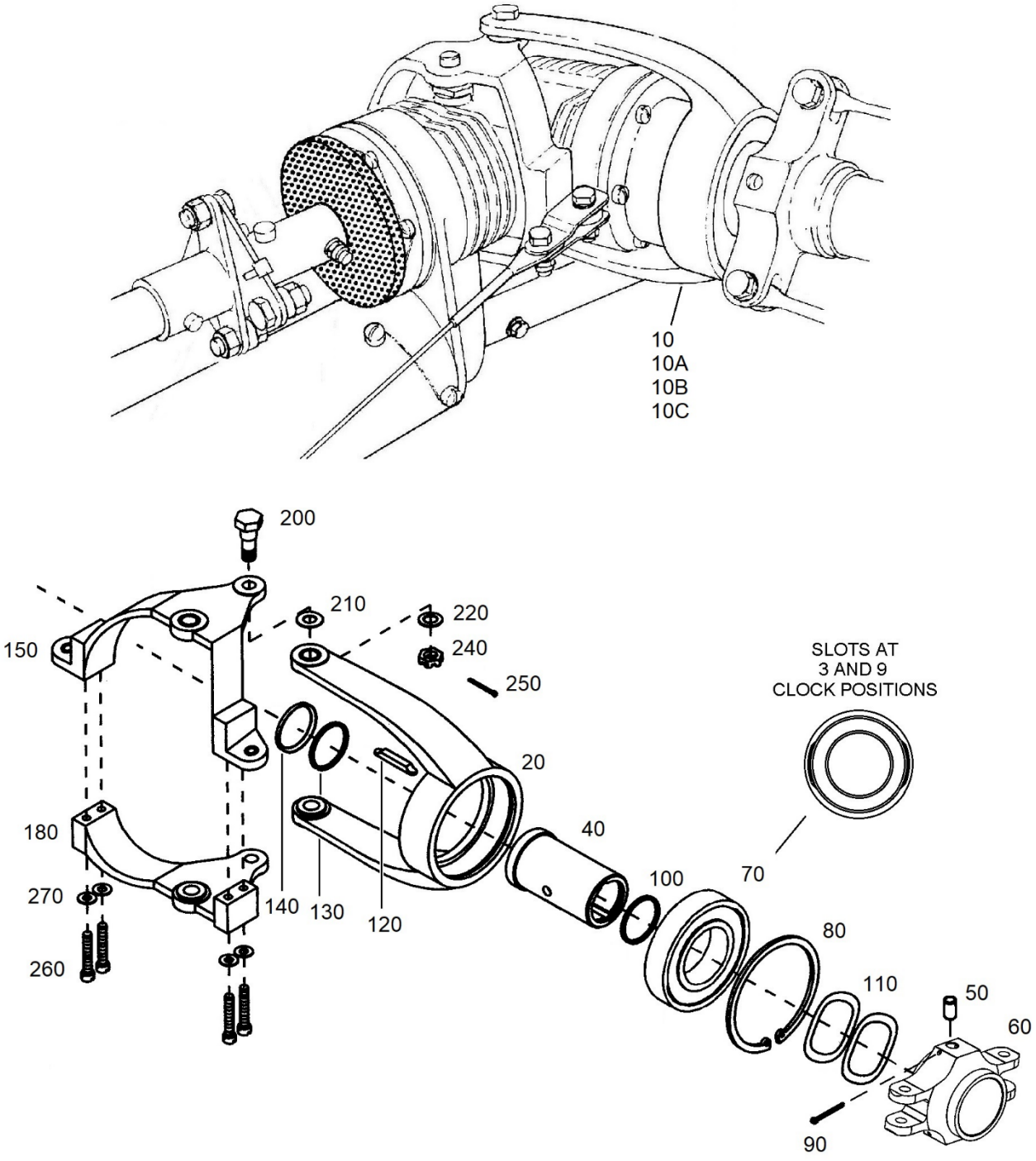

FIGURE 12-6B. TAIL ROTOR MECHANICAL CONTROLS (LEFT HAND GEARBOX)

UNCONTROLLED COPY WHEN DOWNLOADED OR PRINTED
Visit www.enstromhelicopter.com for instructions to order an original manual and to register for email notification updates.

FIGURE 12-6B. TAIL ROTOR MECHANICAL CONTROLS (LEFT HAND GEARBOX)

ITEM NUMBER	PART NUMBER	DESCRIPTION	QTY PER ASSY	MODELS AFFECTED						
				F-28A	280	F-28C	280C	F-28F	280F	280FX
–5	28-16398	Tail Rotor Gearbox, Blades, and Controls Installation	REF			X	X	X	X	X
–5A	28-16380	Tail Rotor Gearbox, Blades, and Controls Installation	REF	X	X	X	X			
10	28-16396-2	. Bearing Housing and Pitch Link Retainer Assembly	1	X	X	X	X	X	X	X
10A	28-16301-3	. Bearing Housing and Pitch Link Retainer Assembly	1	X	X	X	X			
10B	28-16301-4	. Bearing Housing and Pitch Link Retainer Assembly	1	X	X	X	X			
10C	28-16301-7	. Bearing Housing and Pitch Link Retainer Assembly	1	X	X	X	X			
20	28-16331-1	. . Bearing Housing Assembly	1	X	X	X	X	X	X	X
–30	28-16311-1	. . . Bushing	2	X	X	X	X	X	X	X
40	28-16394-2	. . Bearing	1	X	X	X	X	X	X	X
50	28-16397-11	. . Pin	2	X	X	X	X	X	X	X
60*	28-16392-13	. . Retainer, Pitch Link	1	*	*	X	X	X	X	X
70	ECD016-11	. . Bearing	1	X	X	X	X	X	X	X
80	N5002-268-PP	. . Retaining Ring	1	X	X	X	X	X	X	X
90	MS24665-155	. . Cotter Pin	2	X	X	X	X	X	X	X
90	AN381-2-16	. . Cotter Pin (Superseded by MS24665-155)	2	X	X	X	X	X	X	X
100	TS-023	. . Seal	1	X	X	X	X	X	X	X
110	W1819-020	. . Wave Spring Washer	2	X	X	X	X	X	X	X
120	28-16395-1	. Key	2	X	X	X	X	X	X	X
130	TS-023	. Seal	1	X	X	X	X	X	X	X
140	28-16374-1	. Seal Retainer	1	X	X	X	X	X	X	X
150	28-16313-1	. Control Bracket, Top	1	X	X	X	X	X	X	X
–160	28-16319-1	. . Bushing	2	X	X	X	X	X	X	X
–170	28-16311-1	. . Bushing	1	X	X	X	X	X	X	X
180	28-16314-1	. Control Bracket, Bottom	1	X	X	X	X	X	X	X
–190	28-16311-1	. . Bushing	1	X	X	X	X	X	X	X

UNCONTROLLED COPY WHEN DOWNLOADED OR PRINTED

Visit www.enstromhelicopter.com for instructions to order an original manual and to register for email notification updates.

FIGURE 12-6B. TAIL ROTOR MECHANICAL CONTROLS (LEFT HAND GEARBOX)

ITEM NUMBER	PART NUMBER	DESCRIPTION	QTY PER ASSY	MODELS AFFECTED						
				F-28A	280	F-28C	280C	F-28F	280F	280FX
200	28-16310-2	. Bolt	2	X	X	X	X	X	X	X
210	28-16308-1	. Washer	2	X	X	X	X	X	X	X
220	NAS1149F0532P	. Washer	2	X	X	X	X	X	X	X
220	AN960-516L	. Washer (Alternate)	2	X	X	X	X	X	X	X
–230	NAS1149F0563P	. Washer	2	X	X	X	X	X	X	X
–230	AN960-516	. Washer (Alternate)	2	X	X	X	X	X	X	X
240	MS17825-5	. Nut	2	X	X	X	X	X	X	X
240	F12NE-4753-054	. Nut (Superseded by MS17825-5)	2	X	X	X	X	X	X	X
250	MS24665-151	. Cotter Pin	2	X	X	X	X	X	X	X
250	AN381-2-10	. Cotter Pin (Superseded by MS24665-151)	2	X	X	X	X	X	X	X
260	AN503-10-18	. Screw	4	X	X	X	X	X	X	X
270	NAS1149F0332P	. Washer	4	X	X	X	X	X	X	X
270	AN960-10L	. Washer (Alternate)	4	X	X	X	X	X	X	X
–280	MS20995C20	. Safety Wire	A/R	X	X	X	X	X	X	X

– Not illustrated.

* Effective if converted to left side tail rotor installation in accordance with SIL 0159.

UNCONTROLLED COPY WHEN DOWNLOADED OR PRINTED

Visit www.enstromhelicopter.com for instructions to order an original manual and to register for email notification updates.

INTENTIONALLY LEFT BLANK

UNCONTROLLED COPY WHEN DOWNLOADED OR PRINTED
Visit www.enstromhelicopter.com for instructions to order an original manual and to register for email notification updates.

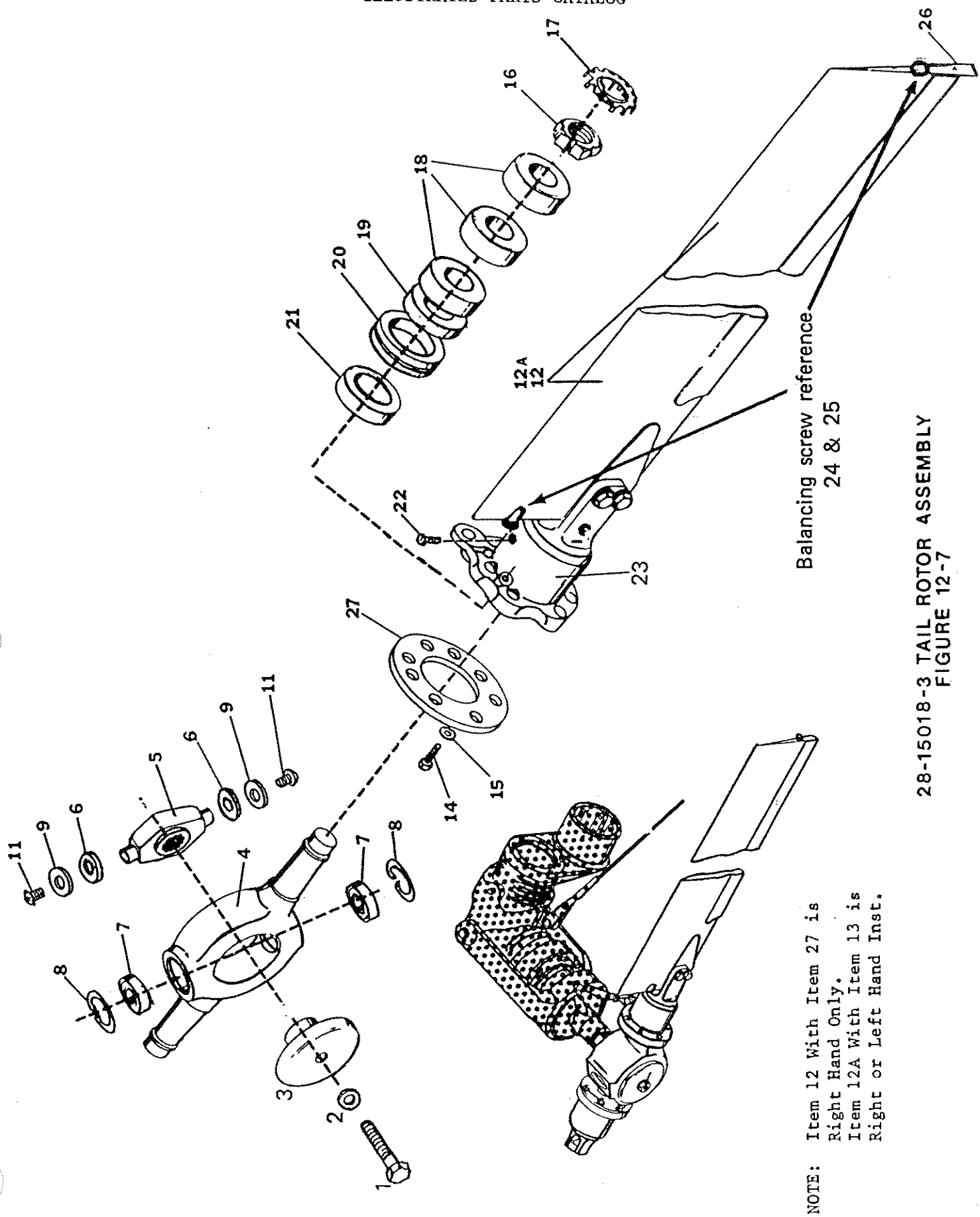

28-15018-3 TAIL ROTOR ASSEMBLY
FIGURE 12-7

NOTE: Item 12 With Item 27 is Right Hand Only.
Item 12A With Item 13 is Right or Left Hand Inst.

UNCONTROLLED COPY WHEN DOWNLOADED OR PRINTED

Visit www.enstromhelicopter.com for instructions to order an original manual and to register for email notification updates.

UNCONTROLLED COPY WHEN DOWNLOADED OR PRINTED

Visit www.enstromhelicopter.com for instructions to order an original manual and to register for email notification updates.

Figure 12-7

ITEM NUMBER	PART NUMBER	DESCRIPTION	QTY. PER ASSY.	MODELS AFFECTED								
				F28A	280	F28C	280C	F28F	280F	280FX		
1	AN7H-7A	Bolt	1	X	X							
2	AN960-716	Washer	1	X	X							
3	28-15002-1	Teeter Stop	1	X	X							
4	28-15202-13	Spindle	1	X	X							
5	28-15206-1U	Hub	1	X	X							
6	28-15203-1	Shim Set	AR	X	X							
7	KRP8A-C	Bearing	2	X	X							
8	N5000-112-PP	Retaining Ring	2	X	X							
9	28-14120-11	Washer	2	X	X							
11	MS21262-6	Screw	2	X	X							
12	28-15017-1	Blade & Grip Assy.	2	X	X							
*12a	28-150023-1	Blade & Grip Assy.	2	X	X							
*13	28-150021-11	Pitch Arm	2	X	X							
14	AN4H-4A	Bolt	16	X	X							
15	AN960-416	Washer	16	X	X							
16	SL61N-4	Nut	2	X	X							
17	SL61W-4	Washer - Lock	2	X	X							
**18	7203PDU(ABEC-3)	Bearing Set (3)	2	X	X							
19	28-15005-1	Spacer (Inner)	2	X	X							
20	28-15027-1	Spacer (Outer)	2	X	X							
21	KP-16B	Bearing	2	X	X							
22	AN526-1032-6	Screw	2	X	X							
23	1641	Lube Fitting	2	X	X							
24	AN515-832	Screw Length AR	4	X	X							
25	AN960-8	Washer	AR	X	X							
26	28-17308-1	Tab - Strike	2	X	X							
27	28-15013-1	Plate	2	X	X							
***28	28-15013	Plate	1	X	X							

*Preferred replacement parts for 28-15007-1 and 28-15013-1 parts.
**Replacement for Q302030T(ABEC-3) bearing set.
***Used with Item 12.

UNCONTROLLED COPY WHEN DOWNLOADED OR PRINTED
Visit www.enstromhelicopter.com for instructions to order an original manual and to register for email notification updates.

UNCONTROLLED COPY WHEN DOWNLOADED OR PRINTED

Visit www.enstromhelicopter.com for instructions to order an original manual and to register for email notification updates.

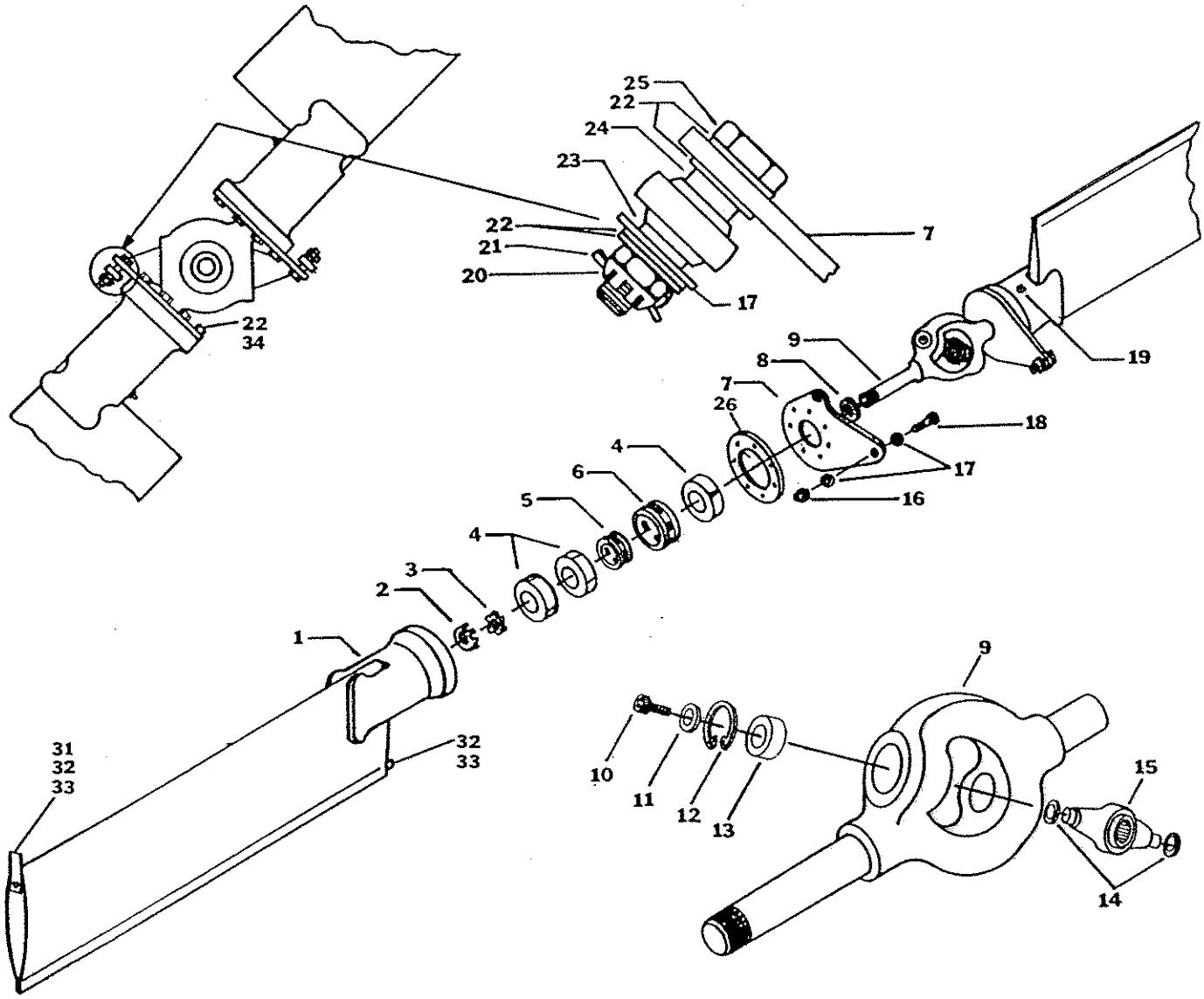

28-150000-7 TAIL ROTOR ASSEMBLY
28-150000-10

FIGURE 12-8

UNCONTROLLED COPY WHEN DOWNLOADED OR PRINTED

Visit www.enstromhelicopter.com for instructions to order an original manual and to register for email notification updates.

UNCONTROLLED COPY WHEN DOWNLOADED OR PRINTED

Visit www.enstromhelicopter.com for instructions to order an original manual and to register for email notification updates.

Figure 12-8

ITEM NUMBER	PART NUMBER	DESCRIPTION	QTY. PER ASSY.	MODELS AFFECTED								
				F28A	280	F28C	280C	F28F	280F	280FX		
1	28-150001-5	TR Blade & Grip Assy	2			X	X					
2	SL61W-5P	Lock Washer	2			X	X					
3	SL61N-5P	Lock Nut	2			X	X					
4	7304DT/304RDB	Bearing Set (3)	2			X	X					
5	28-150016-11	Spacer (Inner)	2			X	X					
6	28-150015-11	Spacer (Outer)	2			X	X					
7	28-150046-1	Pitch Arm	2			X	X					
8	28-150026-11	Spacer	2			X	X					
9	28-150014-13	Spindle	1			X	X					
10	MS21262-6	Screw	2			X	X					
11	28-14120-11	Washer	2			X	X					
12	N5000-112-PP	Snap Ring	2			X	X					
13	KRP8A-C	Bearing	2			X	X					
14	28-15203-1	Shim Set	AR			X	X					
15	28-15206-1	Hub	1			X	X					
16	AN364-428A	Nut	2			X	X					
17	1/4"x11/16" OD	Harper Washer	4			X	X					
18	AN4-4A	Bolt	2			X	X					
19	1650	Lube Fitting	2			X	X					
20	F12-NE-4753-048	Nut	2			X	X					
21	AN381-2-8	Cotter Pin	2			X	X					
22	AN960-416	Washer (AR for Balance)	AR			X	X					
23	28-16353-4	Spacer	2			X	X					
24	28-16353-3	Spacer	2			X	X					
25	AN4-12	Bolt	2			X	X					
26	28-150048-1	Plate	2			X	X					
31	28-17308-1	Strike Tab	2			X	X					
32	AN520-10	Screw (Length AR)	4			X	X					
33	AN960-10	Washer	AR			X	X					
34	AN4H-5A	Bolt	16			X	X					

UNCONTROLLED COPY WHEN DOWNLOADED OR PRINTED

Visit www.enstromhelicopter.com for instructions to order an original manual and to register for email notification updates.

UNCONTROLLED COPY WHEN DOWNLOADED OR PRINTED

Visit www.enstromhelicopter.com for instructions to order an original manual and to register for email notification updates.

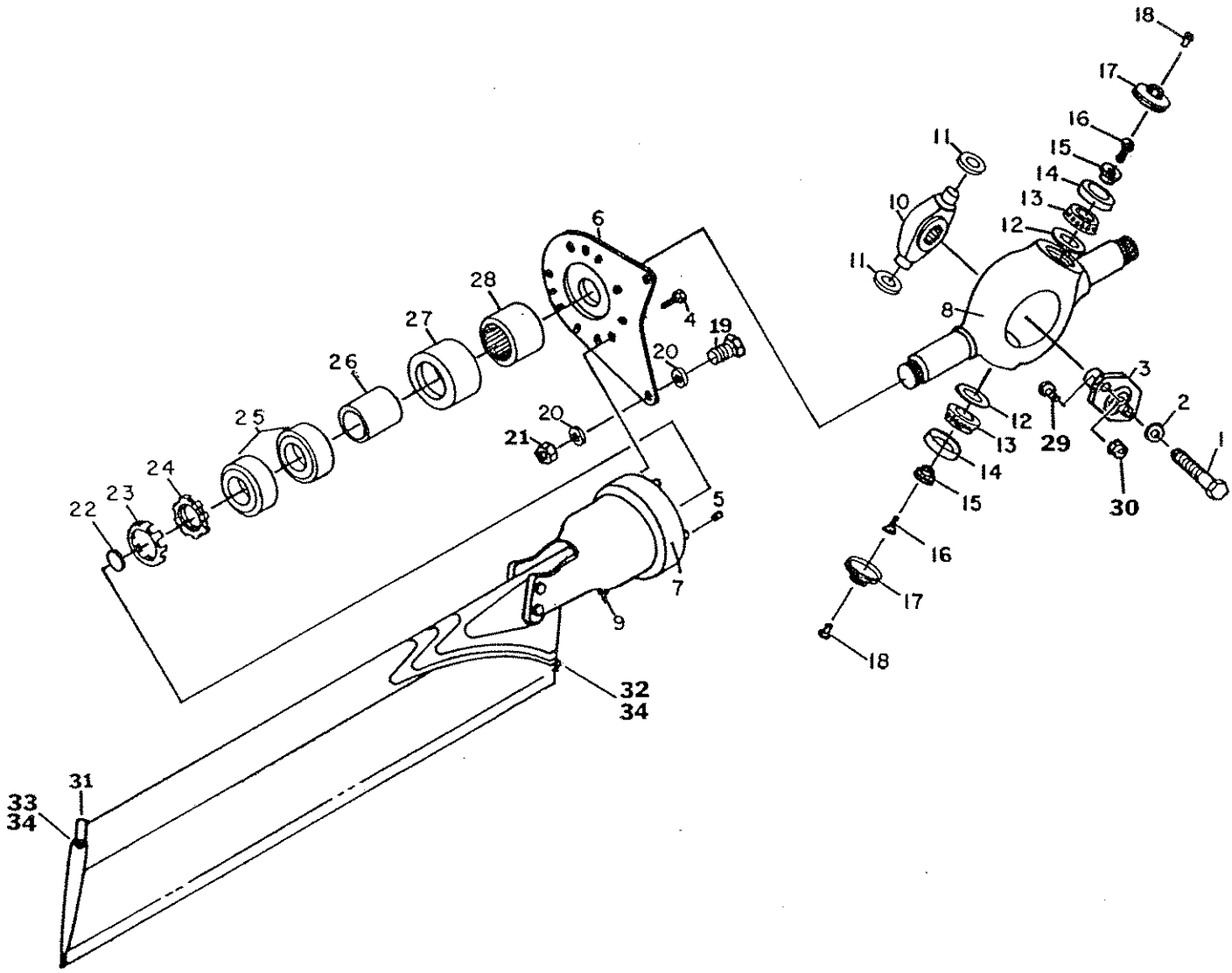

28-150050-2 TAIL ROTOR ASSEMBLY

FIGURE 12-9

UNCONTROLLED COPY WHEN DOWNLOADED OR PRINTED

Visit www.enstromhelicopter.com for instructions to order an original manual and to register for email notification updates.

UNCONTROLLED COPY WHEN DOWNLOADED OR PRINTED

Visit www.enstromhelicopter.com for instructions to order an original manual and to register for email notification updates.

Figure 12-9

ITEM NUMBER	PART NUMBER	DESCRIPTION	QTY. PER ASSY.	MODELS AFFECTED								
				F28A	280	F28C	280C	F28F	280F	280FX		
1	AN7H-7A	Bolt	1			X	X	X	X	X		
2	AN960-716	Washer	1			X	X	X	X	X		
3	28-15030-1	Teeter Stop	1			X	X	X	X	X		
4	AN4H-4A	Bolt	16			X	X	X	X	X		
5	28-150044-5	Dowel	6			X	X	X	X	X		
6	28-150060-11	Retention Plate	2			X	X	X	X	X		
7	28-150001-5	TR Blade & Grip Assy	2			X	X	X	X	X		
8	28-150064-11	Spindle	1			X	X	X	X	X		
9	1650	Lube Fitting	2			X	X	X	X	X		
10	28-150051-1	Hub	1			X	X	X	X	X		
11	MS20002-C6	Washer	2			X	X	X	X	X		
12	28-150062-11	Shield	2			X	X	X	X	X		
13	A2126	Bearing Cone	2			X	X	X	X	X		
14	A2037	Bearing Cup	2			X	X	X	X	X		
15	28-150053-1	Spacer	2			X	X	X	X	X		
16	NK-509-832-R6	Screw	2			X	X	X	X	X		
17	28-150066-11	Retention Cap	2			X	X	X	X	X		
18	1885	Lube Fitting	2			X	X	X	X	X		
19	AN4-4A	Bolt	2			X	X	X	X	X		
20	1/4 HARPER	Washer	4			X	X	X	X	X		
21	AN364-428A	Nut	2			X	X	X	X	X		
22	28-15033-11	Rubber Bumper	2			X	X	X	X	X		
23	SL61W-5P	Washer - Lock	2			X	X	X	X	X		
24	SL61N-5P	Nut	2			X	X	X	X	X		
25	7304DT	Bearing Set (2)	2			X	X	X	X	X		
26	28-150063-11	Bearing Race	2			X	X	X	X	X		
27	28-150055-1	Bearing Housing	2			X	X	X	X	X		
28	MR-18	Bearing	2			X	X	X	X	X		
29	16-1	Bumper	2			X	X	X	X	X		
30	AN364-632A	Nut	2			X	X	X	X	X		
31	28-17308-1	Strike Tab	2			X	X	X	X	X		
32	AN520-10-16	Screw Length	AR			X	X	X	X	X		
33	AN520-10-40	Screw Length	AR			X	X	X	X	X		

UNCONTROLLED COPY WHEN DOWNLOADED OR PRINTED

Visit www.enstromhelicopter.com for instructions to order an original manual and to register for email notification updates.

Figure 12-9 (Cont.)

ITEM NUMBER	PART NUMBER	DESCRIPTION	QTY. PER ASSY.	MODELS AFFECTED								
				F28A	280	F28C	280C	F28F	280F	280FX		
34	AN960-10	Washer	AR			X	X	X	X	X		

UNCONTROLLED COPY WHEN DOWNLOADED OR PRINTED

Visit www.enstromhelicopter.com for instructions to order an original manual and to register for email notification updates.

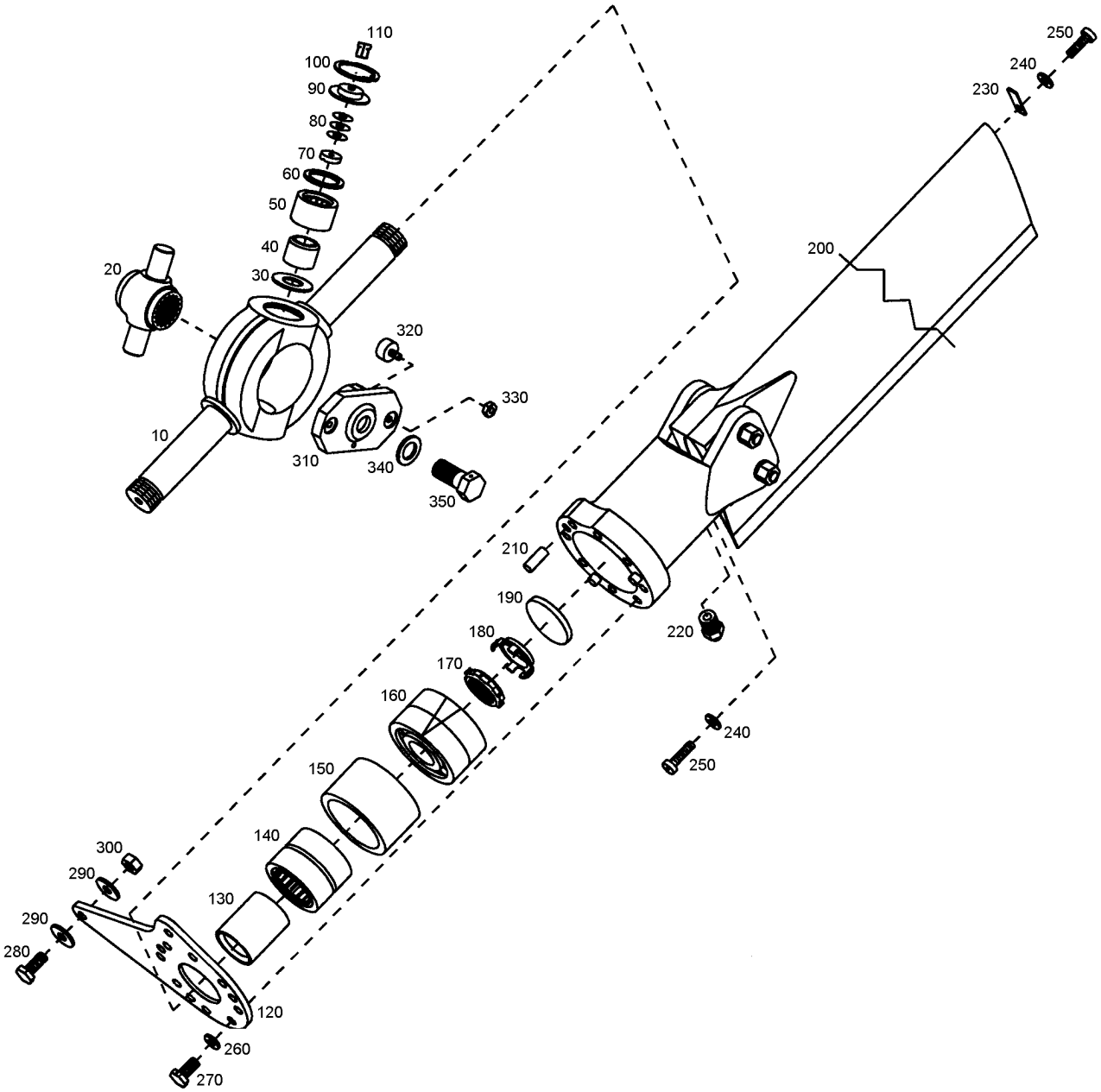

FIGURE 12-10. 28-150079-1 TAIL ROTOR ASSEMBLY

UNCONTROLLED COPY WHEN DOWNLOADED OR PRINTED

Visit www.enstromhelicopter.com for instructions to order an original manual and to register for email notification updates.

FIGURE 12-10. 28-150079-1 TAIL ROTOR ASSEMBLY

ITEM NUMBER	PART NUMBER	DESCRIPTION	QTY PER ASSY	MODELS AFFECTED						
				F-28A	280	F-28C	280C	F-28F	280F	280FX
–	28-150079-1	Tail Rotor Assembly	REF			X	X	X	X	X
–	28-150077-1	. Spindle Assembly	1			X	X	X	X	X
–	28-150077-11	. Spindle Assembly (Alternate)	1			X	X	X	X	X
10♦	28-150074-13	. . Spindle	1			X	X	X	X	X
20♦	28-150067-15	. . Hub	1			X	X	X	X	X
30♦	28-150076-17	. . Washer	2			X	X	X	X	X
40♦	28-150076-15	. . Journal	2			X	X	X	X	X
50♦	B-1210	. . Bearing	2			X	X	X	X	X
60♦	28-150076-19	. . Seal	2			X	X	X	X	X
70♦	28-150076-13	. . Thrust Bumper	2			X	X	X	X	X
80♦	28-150078-10	. . Shim, .010"	A/R			X	X	X	X	X
80♦	28-150078-12	. . Shim, .002"	A/R			X	X	X	X	X
80♦	28-150078-13	. . Shim, .003"	A/R			X	X	X	X	X
80♦	28-150078-15	. . Shim, .005"	A/R			X	X	X	X	X
90♦	28-150076-1	. . End Plate	2			X	X	X	X	X
90♦	28-150076-21	. . End Plate (Replaced by 28-150076-1)	2			X	X	X	X	X
100♦	N5002-100	. . Retaining Ring	2			X	X	X	X	X
110	1877	. . Grease Fitting	2			X	X	X	X	X
120♦	28-150060-11	. Pitch Arm	2			X	X	X	X	X
130♦	28-150063-11	. Sleeve	2			X	X	X	X	X
140♦	ECD001-11	. Bearing	2			X	X	X	X	X
150♦	28-150055-13	. Bearing Retainer	2			X	X	X	X	X
150♦	28-150055-1	. Bearing Retainer (Replaced by 28-150055-13)	2			X	X	X	X	X
160♦	ECD002-13	. Bearing	2			X	X	X	X	X
160♦	ECD002-11	. Bearing (Replaced by ECD002-13)	2			X	X	X	X	X
170♦	SL61N-5F	. Nut	2			X	X	X	X	X
170♦	SL61N-5P	. Nut (Alternate)	2			X	X	X	X	X
180♦	SL61W-5P	. Lock Washer	2			X	X	X	X	X

UNCONTROLLED COPY WHEN DOWNLOADED OR PRINTED

Visit www.enstromhelicopter.com for instructions to order an original manual and to register for email notification updates.

FIGURE 12-10. 28-150079-1 TAIL ROTOR ASSEMBLY

ITEM NUMBER	PART NUMBER	DESCRIPTION	QTY PER ASSY	MODELS AFFECTED						
				F-28A	280	F-28C	280C	F-28F	280F	280FX
190	28-15033-5	. Bumper	2			X	X	X	X	X
200	28-150001-5	. Tail Rotor Blade and Grip Assembly	2			X	X	X	X	X
210	28-150044-5	. . Dowel	3			X	X	X	X	X
220	1650	. Lube Fitting	2			X	X	X	X	X
230	28-17308-1	. Strike Indicator	2			X	X	X	X	X
240	NAS1149F0316P	. Washer	A/R			X	X	X	X	X
240	AN960-10	. Washer (Superseded by NAS1149F0316P)	A/R			X	X	X	X	X
–	NAS1149F0332P	. Washer	A/R			X	X	X	X	X
–	AN960-10L	. Washer (Superseded by NAS1149F0332P)	A/R			X	X	X	X	X
250*	MS35207-262	. Screw	4			X	X	X	X	X
250*	MS35207-AR	. Screw (Replaced by MS35207-262)	4			X	X	X	X	X
260	NAS1149F0432P	. Washer	16			X	X	X	X	X
260	AN960-416L	. Washer (Superseded by NAS1149F0432P)	16			X	X	X	X	X
270	NAS6604H1	. Bolt	16			X	X	X	X	X
270	AN4H4A	. Bolt (Superseded by NAS6604H1)	16			X	X	X	X	X
280	NAS6604-3	. Bolt	2			X	X	X	X	X
280	AN4-5A	. Bolt (Superseded by NAS6604-3)	2			X	X	X	X	X
290	ECD050-17	. Washer	4			X	X	X	X	X
290	ECD050-11	. Washer (Alternate)	4			X	X	X	X	X
290	1/4 Harper	. Flat Washer, 1/4 X 11/16 (Alternate)	4			X	X	X	X	X
300	MS21083N4	. Nut	2			X	X	X	X	X
300	AN364-428A	. Nut (Superseded by MS21083N4)	2			X	X	X	X	X
310	28-15030-1	Teeter Stop Assembly	1			X	X	X	X	X
320	16-1	. Bumper	2			X	X	X	X	X

UNCONTROLLED COPY WHEN DOWNLOADED OR PRINTED

Visit www.enstromhelicopter.com for instructions to order an original manual and to register for email notification updates.

FIGURE 12-10. 28-150079-1 TAIL ROTOR ASSEMBLY

ITEM NUMBER	PART NUMBER	DESCRIPTION	QTY PER ASSY	MODELS AFFECTED						
				F-28A	280	F-28C	280C	F-28F	280F	280FX
330	MS21083N06	. Nut	2			X	X	X	X	X
330	AN364-632A	. Nut (Superseded by MS21083N06)	2			X	X	X	X	X
340	NAS1149F0763P	. Washer	1			X	X	X	X	X
340	AN960-716	. Washer (Superseded by NAS1149F0763P)	1			X	X	X	X	X
350	NAS6607-5	. Bolt	1			X	X	X	X	X
350	AN7H7A	. Bolt (Superseded by NAS6607-5)	1			X	X	X	X	X
–**	28-150079-901	. Tail Rotor Spindle Assembly	1			X	X	X	X	X

* Length as required

** Replaces kit 28-01056-1.

♦ Items included in kit 28-150079-901.

UNCONTROLLED COPY WHEN DOWNLOADED OR PRINTED

Visit www.enstromhelicopter.com for instructions to order an original manual and to register for email notification updates.

SECTION 13

SHIMS

TABLE OF CONTENTS

	Cover Page	13-1
	Table of Contents	13-1
13-1	Index of Enstrom Helicopter Shims	13-2

NOTE: This list indicates all of the shims required to maintain the helicopter except those required in transmission overhaul. The use or application of each shim is also listed for user convenience.

UNCONTROLLED COPY WHEN DOWNLOADED OR PRINTED

Visit www.enstromhelicopter.com for instructions to order an original manual and to register for email notification updates.

TABLE 13-1. INDEX OF ENSTROM HELICOPTER SHIMS

Location and Base Number	Dash Number	Thickness
Tail Rotor Hub 28-15203	-3	0.001
	-4	0.002
	-5	0.003
	-6	0.005
	-7	0.0005

UNCONTROLLED COPY WHEN DOWNLOADED OR PRINTED

Visit www.enstromhelicopter.com for instructions to order an original manual and to register for email notification updates.

APPENDIX A

EQUIVALENT PART NUMBERS

UNCONTROLLED COPY WHEN DOWNLOADED OR PRINTED

Visit www.enstromhelicopter.com for instructions to order an original manual and to register for email notification updates.

INTENTIONALLY LEFT BLANK

UNCONTROLLED COPY WHEN DOWNLOADED OR PRINTED

Visit www.enstromhelicopter.com for instructions to order an original manual and to register for email notification updates.

1. Introduction

This Appendix lists various equivalent part numbers which have been used to identify parts. The parts listed below have not changed, although they may have been supplied under any of the alternate part numbers listed. The changes may have resulted from a supplier change, a procedural change, or simply a correction of a typographical error. Any of the equivalent part numbers may be installed in place of the corresponding primary part number listed.

Enstrom Helicopter ECD-series parts (not listed) may have part numbers in the format ECDXXXX-YY, ECD-XXXX-YY, or ECD XXXX-YY. All three of these part number formats may be used interchangeably. Parts with the same numbers are identical, regardless of the number format

For example:

PART NUMBER	EQUIVALENT PART NUMBERS	DESCRIPTION
ECD4055-11	ECD-4055-11 ECD 4055-11	Illuminated Panel

When ordering new parts, please use the “PART NUMBER” column for faster service.

2. Equivalent Part Numbers Table

TABLE A-1 EQUIVALENT PART NUMBERS

PART NUMBER	EQUIVALENT PART NUMBERS	DESCRIPTION
01-0790006-01	A600-PG-28 A600PG28	Position/Strobe Light. Assembly (Green)
01-0790006-03	A600-PR-28 A600PR28	Position/Strobe Light Assembly (Red)
10065 H1L5	10065	Seal: Oil
02-0250276-00	A610	Strobe Tube Assembly
02-0350259-00	A605	Base Plate Assembly
02-0350260-00	A507	Socket Assembly
1219-4200-Z3Y	S4-200	Spring: Stud Fastener
19-170049-009	A606	Lens Retainer
259N04	259 N4 259-N-04X02	Insert, Tube
264N04	264N 4 264-N-04X02	Tee, Tube

UNCONTROLLED COPY WHEN DOWNLOADED OR PRINTED

Visit www.enstromhelicopter.com for instructions to order an original manual and to register for email notification updates.

TABLE A-1 EQUIVALENT PART NUMBERS

PART NUMBER	EQUIVALENT PART NUMBERS	DESCRIPTION
265N04	265N 4 265-N-04X02	Union, Elbow
268N04X02	268N 4X2 268-N-04X02	Adapter, Straight
269-N-04X02	269N 4X2	Elbow, 90 Degree
3001-127-470/180C-6.3M	3001-127-47018	Detector: Fire/Overheat, Eng.
34-0428020-65	W1290-28 W129028	Lamp, Reflector 28V 26W
34-0428070-64	A508-28 A50828	Lamp 28V
38-0130090-00	A616	Gasket/Spacer
38-0130107-00	A427-4 A4274	Gasket, 4 1/4” Spacer
38-0230021-00	W1283	Gasket, Position Light Lens
381N-500-S	381N-500 381N500	Potentiometer, 1W, 500 OHM
3SNE-094A-72	3-SNE-094A-72 3SNE094A-72	Cable Throttle
428-3-VG	428-3VG	Sleeve, Crimp
68-2290005-30	A612	Lens, Clear
68-4230020-40	W1284-G W1284G	Lens, Green Position Light
68-4230020-50	W1284-R W1284R	Lens, Red Position Light
68-4250066-30	A615	Lens, Clear
6X1/2	6RX1/2	Screw, Self-Tapping
6X3/8	6R X 3/8 6RX3/8	Screw, Self-Tapping
8473RUPH5-L16	8473 H5L16	Seal
8X1/2	8RX1/2 1/2 X8	Screw:Sheet Metal
9276 H1L5	9276	Seal, Oil
97CSX-2 24VDC	W97CSX-2	Relay, Power, 24V
A01787-8Z-1D	A1787-8Z1 A1787-8Z-1	Nut , Speed, Tinnerman
A01789-8Z-1D	A1789-8Z-1	Nut Tinnerman
A06194-8Z-1D	A6194-8Z-1	Nut Tinnerman

UNCONTROLLED COPY WHEN DOWNLOADED OR PRINTED

Visit www.enstromhelicopter.com for instructions to order an original manual and to register for email notification updates.

TABLE A-1 EQUIVALENT PART NUMBERS

PART NUMBER	EQUIVALENT PART NUMBERS	DESCRIPTION
A-700RD1180	A700RD11800 A-700	Cable, Shutoff
AN515B6R10	AN515-B6R10	Screw, Machine
ANL-100	ANL100	Low Voltage Limiter
ANL-150	ANL150	Low Voltage Limiter
ANL-35	ANL35	Low Voltage Limiter
B-1210	B1210	Bearing: Needle
CCR264-3-3	CCR-264 SS-3-3	Rivet
CR 17240	17240	Seal: Retention
CR3212-4-02	CR3212-4-2	Rivet
CR3213-4-02	CR3213-4-2	Rivet
CR3213-6-3	CR3213-6-03	Rivet
CRWI14809	14809	Seal: Oil
FN22M-624	FN-22M-624	Nut, Lock
GCSG501-2	GCSG 501-2	Control Unit: Starter Generator
G08DU	DU-08 DU08 08DU	Thrust Washer
HD6158510090030	HD6158-510-090-030	Switch, Ignition
HFLVV3M	HFLVV-3M	Rod End
HFVV3M	HFVV-3M	Rod End
HGVV3M	HGVV-3M	Rod End
HM3M	HM-3M	Rod End
HML3M	HML-3M	Rod End
HMLVV3M	HMLVV-3M	Rod End
HMLVV4M	HMLVV-4M	Rod End
HMLVV5M	HMLVV-5M	Rod End
HMVV3M	HMVV-3M	Rod End
HMVV4M	HMVV-4M	Rod End
HMVV5M	HMVV-5M	Rod End
IPT-20RT1-1000-150G	IPT-20RT1-1000	Transducer
KA1-N	K1AN	Plunger: Ball
KN500B1/8	KN500B-1/8	Knob, Aluminum
M83248/1-032	M83248/1032	O-Ring
MOBIL 1 LS 75W-90	MOBIL 1 75W-90 MOBIL 1 75-90	Gear Lube
MS20002C4	MS20002-C4	Washer, Countersunk

UNCONTROLLED COPY WHEN DOWNLOADED OR PRINTED

Visit www.enstromhelicopter.com for instructions to order an original manual and to register for email notification updates.

TABLE A-1 EQUIVALENT PART NUMBERS

PART NUMBER	EQUIVALENT PART NUMBERS	DESCRIPTION
MS20073-03-04	MS20073-0304	Bolt
MS21240-08C-12	MS21240-08C12	Bearing
MS24693-BB52	MS24693BB52	Screw, Machine
MS24693-S24	MS24693S24	Screw, Machine
MS24693-S275	MS24693S275	Screw, Machine
MS24694-S51	MS24694S51	Screw, Machine
MS24694-S54	MS24694S54	Screw, Machine
MS24694-S55	MS24694S55	Screw, Machine
MS24694-S56	MS24694S56	Screw, Machine
MS24694-S94	MS24694S94	Screw, Machine
MS24694-S95	MS24694S95	Screw, Machine
MS24694-S58	MS24694S58	Screw, Machine
MS20995C32	MS20995-C32	Safety Wire
NAS1612-2	NAS1612-2A	O-Ring, E1515-80
NAS1612-8	NAS1612-8A	O-Ring, E1515-80
NK-500-8R6	NK500-8R6 NP-500-8R6 NP500-8R6	Screw Nylok
NK-500-8R8	NK500-8R8 NP-500-8R8 NP500-8R8	Screw Nylok
PCS-111A	PCS111A	Sensor: Programmed Continuity
SC628ANPR	SC628ANP	Pulse Horn, Loud Fast Tone
SC628WR	SC628W	Sonalert Horn
SF96-20	SF96-20-PT	Oil, Silicone
SL61N5P	SL61N-5P	Nut, Lock
SL61W5P	SL61W-5P	Washer, Lock
ZFD-1094-0-7-32	ZFD10940732	Boot: Cyclic, Turbine

UNCONTROLLED COPY WHEN DOWNLOADED OR PRINTED

Visit www.enstromhelicopter.com for instructions to order an original manual and to register for email notification updates.

APPENDIX B

HARDWARE SUBSTITUTIONS

TABLE OF CONTENTS

Table of Contents	B-1
1 Introduction	B-2
2 Acceptable Substitution Conditions	B-2
3 Hardware Tables	B-2
Table A – Bolts	B-3
Table B – Screws	B-5
Table C – Nuts	B-8
Table D – Nut Plates	B-9
Table E – Solid Rivets	B-11
Table F – Blind Rivets	B-12
Table G – Washers	B-13
Table H – Rivnuts	B-15
Table I – Turnbuckles	B-15
Table J – Grommets	B-15
Table K – Cotter Pins	B-16
Table L – Clamps (Nylon)	B-17
Table M – Cable Ties	B-17
Table N – U-Channels (Rubber)	B-17
Table O – Shrink Tubing	B-17
Table P – Ring Tongue Terminals	B-18
Table Q – Retaining Rings	B-18
Table R – Cushioned Clamps	B-18
Table S – PlusNuts	B-18
Table T – Solder Sleeve Shield Terminators	B-19
Table U – Pipe Plugs (Countersink Hex Head)	B-19
Table V – Clip Nut	B-19
Table W – Plug and Bleeder – Screw Tread	B-19
Table X – Pin, Retaining, Safety	B-19
Table Y – Quarter Turn Fastener	B-19
Table Z – Quick Disconnect Terminal	B-19
Table AA – Plug (BNC, TNC, N)	B-19
Table AB – Roll Pin	B-19
Table AC – Sleeve, Coupling	B-19
Table AD – Clevis Pin	B-20
Table AE – Quarter (1/4) Turn Fastener Receptacle	B-20
Table AF – Washers, Extended AN960 Listing	B-21

UNCONTROLLED COPY WHEN DOWNLOADED OR PRINTED

Visit www.enstromhelicopter.com for instructions to order an original manual and to register for email notification updates.

1. Introduction

This specification establishes the conditions under which hardware may be substituted and lists the specific hardware which may be substituted. These standard substitutions apply only to components and assemblies which are designed by Enstrom and assembled in house. The tables which follow list the substitutions which are permissible. The hardware called out on the drawing is the preferred configuration. Each table contains a left-hand column which lists the basic or preferred hardware. The adjacent column to the right lists the alternate hardware. Alternate hardware may be used as a substitute for the hardware in the left column; however, hardware in the left column may NOT be substituted for hardware listed as alternate. In cases where hardware is interchangeable, 'Equivalent Substitution' will be stated in the right-hand column. In the case where there is no substitution, N/A (no alternate) will be stated in the right hand column.

2. Acceptable Substitution Conditions

Hardware may be substituted without further approval when all the following conditions apply:

- The preferred hardware is unavailable.
- There is an acceptable alternate listed in this report.
- All of the other material conditions (hole diameter, material thickness, etc.) are within standard tolerances for the component.

To correct for component stack-up so as to ensure one to three threads showing past the nut, the grip length of the fastener may be substituted without further approval by the following methods:

- The length of rivets, screws, or bolts may be increased or decreased one grip length (a "dash number").
- Washers may be added or subtracted or washer thicknesses may be substituted. Up to a total of three washers may be installed in combination under the head of the bolt and/or nut. (Washer substitutions must be in accordance with standard aircraft practices.)
    - o Consult Engineering if it is necessary to remove all the washers or if there is a conflict with the washer requirements on the approved drawing.
- Consult Engineering if a specific hardware installation consistently requires adjustment in accordance with the conditions of this paragraph.

Substitutions may NOT be made in fastener diameter without engineering approval. Substitutions may NOT be made beyond one grip length or "dash number" without engineering approval.

3. Hardware Tables

Tables for substitute hardware are provided on the following pages. If the substitution is applicable to all dash numbers of a particular part number, it will be represented by a set of open parentheses. For example, AN3-( ) would indicate that the substitution includes all dash numbers for the AN3 bolt.

UNCONTROLLED COPY WHEN DOWNLOADED OR PRINTED

Visit www.enstromhelicopter.com for instructions to order an original manual and to register for email notification updates.

Table A – Bolts

BOLT	ALTERNATE	
AN173-( )	N/A	
AN174-( )	N/A	
AN175-( )	N/A	
AN176-( )	N/A	
AN178-( )	N/A	
AN3	NAS6603	
-3A	-1	
-10	D10	
-10A	-10	
-11A	-12	
-12	D14	
-12A	-14	
-13	D16	
-13A	-16	
-14A	-18	
-15A	-20	
-16A	-22	
-17A	-24	
-20A	-26	
-21	D28	
-21A	-28	
-22	D30	
-22A	-30	
-23A	-32	
-24A	-34	
-26	D38	
-27A	-40	
-30A	-42	
-31A	-44	
-33A	-48	
-34A	-50	
-4	D2	
-4A	2	
-5	D4	
-5A	-4	
-6	D6	
-6A	-6	
-7	D8	
-7A	-8	
H3A	H1	
H4A	H2	
H5A	H4	

Table A – Bolts

H6A	H6	
H10	DH10	
H13A	H16	
AN3	NAS6703	
C4A	-10	
C10A	D10	
AN4	NAS6604	
-3A	-1	
-4A	-1	
-5A	-3	
-6A	-5	
-7	D7	
-7A	-7	
-10A	-9	
-11	D11	
-11A	-11	
-12	D13	
-12A	-13	
-13	D15	
-13A	-15	
-14	D17	
-14A	-17	
-15	D19	
-15A	-19	
-16	D21	
-16A	-21	
-17	D23	
-17A	-23	
-20	D25	
-20A	-25	
-21A	-27	
-22A	-29	
-23	D31	
-23A	-31	
-25A	-36	
-26A	-38	
-27A	-40	
-30A	-42	
-31A	-44	
-33A	-48	
-34A	-50	
-35A	-52	
-36	D54	

UNCONTROLLED COPY WHEN DOWNLOADED OR PRINTED

Visit www.enstromhelicopter.com for instructions to order an original manual and to register for email notification updates.

Table A – Bolts

-36A	-54	
-37	D56	
-37A	-56	
-42A	-62	
H3A	H1	
H4A	H1	
H5A	H3	
H6A	H5	
H7A	H7	
H10A	H9	
H12A	H13	
H13A	H15	
H14A	H17	
H15A	H19	
H16A	H21	
AN4	NAS6704	
C5A	-3	
AN42BC11A	N/A	
AN42BC14A	N/A	
AN5	NAS6605	
-4A	-1	
-6A	-5	
-7	D7	
-10	D9	
-11	D11	
-11A	-11	
-12	D13	
-13	D15	
-13A	-15	
-15	D19	
-15A	-19	
-16	D21	
-16A	-21	
-17A	-23	
-21A	-27	
-22	D29	
-22A	-29	
-33A	-48	
-35A	-52	
-37A	-56	
-44A	-65	

Table A – Bolts

H4A	H1	
H5A	H3	
H6A	H5	
H7A	H7	
H10A	H9	
H46A	H69	
AN5	NAS6705	
C13A	-15	
AN6	NAS6606	
-6A	-3	
-7A	-5	
-10A	-7	
-11A	-9	
-20A	-23	
-22	D25	
-22A	-25	
-23A	-29	
-24A	-31	
-27A	-38	
-30A	-40	
-33	D46	
H6A	H3	
H34A	-48	
AN7	NAS6607	
-27A	-38	
H7A	-5	
AN73( )	MS20073-03-( )	
AN74( )	MS20073-04-( )	
AN75( )	MS20073-05-( )	
AN76( )	MS20073-06-( )	
AN73A( )[1]	MS20074-03-( )	Equivalent Substitution
AN74A( )[1]	MS20074-04-( )	
AN75A( )[1]	MS20074-05-( )	
AN76A( )[1]	MS20074-06-( )	
AN8	NAS6608	
-10A	-5	
LWB-22-6-58	N/A	
MS20006-( )	N/A	
MS20074-( )	N/A	
MS21250-( )	N/A	
MS24677-( )	N/A	

[1] Coarse thread

UNCONTROLLED COPY WHEN DOWNLOADED OR PRINTED

Visit www.enstromhelicopter.com for instructions to order an original manual and to register for email notification updates.

Table A – Bolts

NAS144	MS20004	
DH10	H4	
DH12	H4	
NAS146	MS20006	
DH22	H12	
DH24	H14	
NAS1004-( )	N/A	
NAS1103-11	NAS6203-11	
NAS1104	NAS6204	
-9D	-9D	
-12	-12	
NAS1204-40D	N/A	
NAS1306	NAS6606	
-8	-8	
-48	-48	
NAS428-( )	N/A	
NAS6203-( )	N/A	
NAS6204-( )	N/A	
NAS6205-( )	N/A	
NAS6206-( )	N/A	
NK-6-6A	N/A	
NP5-6A	N/A	

Table B – Screws

SCREW	ALTERNATE	
AN502	NAS1101	
-10-8	-3-8	
-10-10	-3-10	
-10-12	-3-12	
-10-14	-3-14	
-10-18	-3-18	
AN503	NAS1101	
-8-4	-08-4	
-8-6	-08-6	
-8-8	-08-8	
-10-6	N/A	
-10-8	N/A	
-10-10	N/A	
-10-18	N/A	
-416-10	N/A	
-416-28	N/A	
AN505-4R6	MS35190-223	

Table B – Screws

AN505-4R7	MS35190-224	
AN507	MS24693	
-632-12	-S30	
-632R4	-S24	
-632R5	-S25	
-632R6	-S26	
-632R7	-S27	
-632R8	-S28	
-632R12	-S30	
-632R14	-S31	
-632R16	-S32	
-632R24	-S36	
-8-8	-S50	
-8R6	-S48	
-8R7	-S49	
-832-9	-S61	
-832R7	-S49	
-832R8	-S50	
-832R9	-S51	
-832R10	-S51	
-832R11	-S52	
-1032R6	-S270	
-1032R8	-S272	
-1032R10	-S273	
-1032R14	-S275	
-1032R44	-S287	
B632R6	-BB26	
B832R6	-B48	
B832R10	-B51	
C632R8	-C28	
C832-12	-C52	
C832R8	-C50	
C832R14	-C53	
C832R16	-C54	
C832R18	-C55	
C1024R14	-C75	
C1032-12	-C274	

UNCONTROLLED COPY WHEN DOWNLOADED OR PRINTED

Visit www.enstromhelicopter.com for instructions to order an original manual and to register for email notification updates.

Table B – Screws

AN509	MS24694	
-8R4	-S1	
-8R5	-S2	
-8R6	-S3	
-8R7	-S4	
-8R8	-S5	
-8R9	-S6	
-8R10	-S7	
-8R14	-S11	
-8R16	-S13	
-8R18	-S15	
-8R20	-S17	
-10R10	-S52	
-10R16	-S58	
-10R38	-S80	
-516R16	-S148	
AN510	MS35199	
B10R10	-56	
AN515	MS35206	
-2R4	-203	
-4-20	-222	
-4R8	-217	
-4R10	-218	
-4R12	-219	
-5R6	N/A	
-6-3	-225	
-6-6	-228	
-6-7	-229	
-6-24	-236	
-6R4	-226	
-6R5	-227	
-6R6	-228	
-6R7	-229	
-6R8	-230	
-6R11	-232	
-6R18	-328	
-8-7	-244	
-8-8	-245	
-8-10	-246	
-8-16	-249	
-8-24	-251	
-8R5	-242	
-8R6	-243	

Table B – Screws

-8R7	-244	
-8R8	-245	
-8R10	-246	
-8R12	-247	
-8R14	-248	
-8R16	-249	
-8R18	-332	
-8R20	-250	
-8R24	-251	
-8R32	-253	
-10R8	-263	
10R10	-264	
AN515	MS35214	
B6R6	-25	
B6R7	-26	
B6R8	-27	
B6R10	-28	
B6R12	-29	
B6R14	-30	
B6R16	-31	
AN515	MS35214	
B6R18	-109	
B8R8	-42	
B8R12	-44	
AN515	MS51957	
C6R12	-32	
C8R5	-42	
AN520-( )	MS35207-( )	
AN520B( )	MS35215-( )	
AN520C( )	MS51958-( )	
AN520DD( )	MS35219-( )	
AN520PB( )	MS35215-( )C	
AN525	MS27039	
-10-7	-1-06	Use washer under head.
-10-8	-1-08	
-10R4	-1-04	
-10R6	-1-06	
-10R7	-1-07	
-10R8	-1-08	
-10R10	-1-10	
-10R12	-1-12	
-10R14	-1-14	

UNCONTROLLED COPY WHEN DOWNLOADED OR PRINTED

Visit www.enstromhelicopter.com for instructions to order an original manual and to register for email notification updates.

Table B – Screws

-10R16	-1-16	Use washer under head.
-10R18	-1-18	
-10R24	-1-24	
-416R8	-4-08	
-416R10	-4-10	
-416R12	-4-12	
-832-6	-0806	
-832R4	-0804	
-832R6	-0806	
-832R7	-0807	
-832R8	-0808	
-832R10	-0810	
-832R14	-0814	
-832R16	-0816	
-832R18	-0818	
-832R20	-0820	
-832R22	-0822	
-832R24	-0824	
AN526	MS35206	
-632-4	-226	Use washer under head.
-632-5	-227	
-632R5	-227	
-632R6	-228	
-632R7	-229	
-632R8	-230	
-632R10	-231	
-632R12	-232	
-632R16	-234	
-632R22	-329	
-632R30	-361	
AN526	AN525	
-832-6	-832R6	
-832R6	-832R6	
-832-7	-832R7	
-832R8	-832R8	
-832R10	-832R10	
-832R12	-832R12	
-832R16	-832R16	
-1032-8	-10-8	
-1032R6	-10R6	
-1032R9	-10R9	
-1032R12	-10R12	

Table B – Screws

C1032R5 C1032R12	-10R5 -10R12	
AN526	MS51957	
C832R8	-45	Use washer under head.
C832R10	-46	
C832R12	-47	
AN530	MS51861	
-4-6	-14	Self-Tapping
-6-6	-24	
-6-8	-25	
-6R6	-24	
-6R8	-25	
-6R10	-26	
-8R6	-34	
-8R8	-35	
AN531	MS51862	
-6-6	-13	Self-Tapping
-6R6	-13	
-6R8	-14	
-6R10	-15	
AN535-( )	MS21318-( )	
BN4CPK5	N/A	
MS16998-( )	N/A	
MS18063-8	25274N	
MS18066-( )	N/A	
MS24693-( )	N/A	
MS24694-( )	N/A	
MS27039-( )	N/A	
MS35206-( )	N/A	
MS35214-( )	N/A	
MS35265-( )	N/A	
MS51957-( )	N/A	
NP500-( )	NK500-( )	Equivalent Substitution
NP501-( )	NK501-( )	
NP509-( )	NK509-( )	
NP510-( )	NK510-( )	
NP525-( )	NK525-( )	
PK86XA( )	N/A	
PK89XA( )	N/A	
4122080-19	NAS1352-08H6	

UNCONTROLLED COPY WHEN DOWNLOADED OR PRINTED

Visit www.enstromhelicopter.com for instructions to order an original manual and to register for email notification updates.

Table C - Nuts

NUT	ALTERNATE	
AN310-5	MS17825-5	
AN315-( )	N/A	
AN316-( )	N/A	
AN320-( )	N/A	
AN335-420	MS51967-2	
AN340	MS35649	
-4	-242	
-8	-282	
-632	-262	
-832	-282	
B832	-286B	
AN341-516	MS35650-3315T	
AN345	MS35650	
-10	-302	
C416	-3254	
AN350-1032	MS35426-13	
AN363-524	MS21045L5	
AN364-( )	MS20364-( )	Equivalent Substitution
AN364-( )	MS21083	
-428A	N4	
-524A	N5	
-624A	N6	
-632A	N06	
-820A	N8	
-832A	N08	
-1018A	N10	
-1032A	N3	
-1216A	N12	
AN365-( )	MS21044	
-428A	N4	
-524A	N5	
-624A	N6	
-632A	N06	
-832A	N08	
-1032A	N3	
AN365-( )	MS20365-( )	Equivalent Substitution
AN818-( )	AN818-( )J	
AN924-( )D	AN924-( )W	
FN-22M-624	N/A	
F12NE-4717	MS17826	

Table C - Nuts

-02	-3	
-048	-4	
-054	-5	
-064	-6	
-070	-7	
-080	-8	
F12NE-4753	MS17825	
-02	-3	
-048	-4	
-054	-5	
-064	-6	
-080	-8	
MS17826-( )	N/A	
MS20364-( )	MS21083N( )	
MS20365-( )	MS21044N( )	
MS20500-( )	N/A	
MS21042-( )	N/A	
MS21043-( )	N/A	
MS21044-( )	N/A	
MS51922-1	M45913/2-4CG5C	
NAS509-( )	N/A	
NAS679-( )	N/A	
22NKM( )	N/A	
37FL624	N/A	

UNCONTROLLED COPY WHEN DOWNLOADED OR PRINTED

Visit www.enstromhelicopter.com for instructions to order an original manual and to register for email notification updates.

Table D – Nut Plates

NUT PLATE	ALTERNATE	
A1784-6Z1D	NAS395-6	
A1785-6Z-1	NAS395-7	
A1787-8Z1D	NAS395-18	
A1789-8Z-1	NAS395-16	
A6162-8Z-1	NAS444-14	
A6191-8Z-1	NAS444-4	
A6194-8Z-1	NAS445-4	
A6195-6Z-1	NAS444-2	
A6195-8Z-1	NAS444-5	
A6196-8Z-1	NAS445-5	
F22LHA27M22-62	N/A	
F22NA1	MS21078	
-02 -048 -62 -82 -82BC	-3 -4 -06 -08 -08K	Equivalent Substitution
F22NA17A	MS21080	
-02 -048 -62 -82	-3 -4 -06 -08	Equivalent Substitution
F22NA17	NAJ17	
-02BC	-02BC	[2]
-62	-62	
-62BC	-62BC	
-82	-82	
-82BC	-82BC	
MS21055L3	N/A	
MS21059L08K	MS21059L08	Nutplate attachment rivet use NAS1097AD3[3]
MS21069-08K	MS21069-08	
MS21073-( )	N/A	
MS21075L( )	NAS1068( )	Equivalent Substitution

Table D – Nut Plates

MS21078	F22NA1	
-3	-02	Equivalent Substitution
-4	-048	
-06	-62	
-08	-82	
-08K	-82BC	
MS21078	MS21078	
-3K	-3	Nutplate attachment rivet use NAS1097AD3[4]
-4K	-4	
-08K	-08	
MS21078	NAJI	
-06	-62	[5]
-06K	-62BC	
-08	-82	
-08K	-82BC	
-3	-02	
-3K	-02BC	
MS21080	MS21080	
-3K	-3	Nutplate attachment rivet use NAS1097AD3[6]
-4K	-4	
-08K	-08	
NAJ17-02BC	MS21080-3K	
NAJ38-82BC	NAS1024D08K	
NAJ5-048	NAS1027D4	
NAS1023-( )	MS21078-( )	Equivalent Substitution
NAS1023	NAJ1	
D06	-62	[7]
D06K	-62BC	
D08	-82	
D08K	82BC	

[2] Equivalent Substitution is permissible when the NAJ( ) nut plate is unavailable.

[3] Minimum sheet thickness .025

[4] Minimum sheet thickness .025

[5] Equivalent Substitution is permissible when the NAJ( ) nut plate is unavailable.

[6] Minimum sheet thickness .025

[7] Equivalent Substitution is permissible when the NAJ( ) nut plate is unavailable.

UNCONTROLLED COPY WHEN DOWNLOADED OR PRINTED

Visit www.enstromhelicopter.com for instructions to order an original manual and to register for email notification updates.

Table D – Nut Plates

NAS1023D08K	NAS1023D08	Nutplate attachment rivet use NAS1097AD3[8]
NAS1023D08K	MS21078-08K	
NAS1024D08K	NAS1024D08	Nutplate attachment rivet use NAS1097AD3[9]
NAS1025D06K	NAJ17-62BC	
NAS1025D08K	NAS1025D08	Nutplate attachment rivet use NAS1097AD3[10]
NAS1024D08K	NAS1024N08K	
NAS1024N08K	NAS1024A08K	
NAS1024N08K	MS21078-08	Use with NAS500WKD8 nutplate spacer.
NAS1025	NAJ17	
D3K	-02BC	[11]
D06	-62	
D06K	-62BC	
D08	-82	
D08K	-82BC	
NAS1026N08K	NAS1026A08K	
NAS1033N06	N/A	
NAS1474A3	N/A	
NAS686( )	MS21059( )	Equivalent Substitution
12LHTA1M-62	MS21069-06	Equivalent Substitution
12LHTA1M-62BC	MS21069-06K	
12LHTA17M-62	MS21071-06	
12LHTA17M-62BC	MS21071-06K	
22NA17A-02	F22NA17A	Equivalent Substitution

Table D – Nut Plates

22NA17A-02	MS21080-3	[12]
22NA17A-82BC	F22NA17A	Equivalent Substitution
22NA17A-82BC	MS21080-08K	[13]
22NA21-22-02	N/A	
22NA21-22-048	N/A	
22NA27-22-02	F22NA27	Equivalent Substitution
22NA27-22-02	NAS1033N3	
22NA27-68-02	F22NA27	Equivalent Substitution
22NA27-68-02	NAS1033D3	[14]
22NA217-22-048	NAS1032P4	
52LHTA51-M82	MS21069-08	
52LHTA51M-82BC	MS21069-08K	
68NA1-02	NAS1023D3	
68NA1-048	F22NA1-048	
68NA1-62BC	NAS1023D06K	
68NA17A-82	NAS1025D08	
68-NA21-68-02	NAS686A3	

[8] Minimum sheet thickness .025

[9] Minimum sheet thickness .025

[10] Minimum sheet thickness .025

[11] Equivalent Substitution is permissible when the NAJ( ) nut plate is unavailable.

[12] "F" prefix (Type II cadmium plate) is also an acceptable alternate to original finish (Type I cadmium plate).

[13] "F" prefix (Type II cadmium plate) is also an acceptable alternate to original finish (Type I cadmium plate).

[14] "F" prefix (Type II cadmium plate) is also an acceptable alternate to original finish (Type I cadmium plate).

UNCONTROLLED COPY WHEN DOWNLOADED OR PRINTED

Visit www.enstromhelicopter.com for instructions to order an original manual and to register for email notification updates.

Table E – Solid Rivets

SOLID RIVET	ALTERNATE	
AN426A( )	MS20426A( )	Equivalent
AN426AD( )	MS20426AD( )	Substitution
AN427M4-7	MS20427M-7	Equivalent Substitution
AN470A( )	MS20470A( )	Equivalent
AN470AD( )	MS20470AD( )	Substitution
MS20427M-7	AN427M4-7	
MS20435M3-8	MS20615-3M8	
MS20615-( )	N/A	
NAS1097AD( )	N/A	Nutplate Rivet

UNCONTROLLED COPY WHEN DOWNLOADED OR PRINTED

Visit www.enstromhelicopter.com for instructions to order an original manual and to register for email notification updates.

Table F – Blind Rivets

BLIND RIVET	ALTERNATE	
CCR264SS	MS20605S	
-3-02	-3-W2	
-3-03	-3-W3	
-3-04	-3-W4	
-3-05	-3-W5	
CCR274SS( )	N/A	Nutplate Rivet
CR2163	NAS1398D	
-4-02	-4-2	
-4-04	-4-4	
CR2249	NAS1738B	
-5-02	-5-2	
-5-03	-5-3	
-5-06	-5-6	
-5-07	-5-7	
-5-08	-5-8	
CR3212	NAS9302B	
-4-02	-4-2	
-4-03	-4-3	
-4-04	-4-4	
-4-05	-4-5	
-5-02	-5-2	
-5-03	-5-3	
CR3213	NAS9301B	
-4-01	-4-1	
-4-02	-4-2	
-4-03	-4-3	
-4-04	-4-4	
-4-05	-4-5	
-4-06	-4-6	
-4-07	-4-7	
-4-09	-4-9	
-5-02	-5-2	
-5-03	-5-3	
-5-04	-5-4	
-6-02	-6-2	
-6-03	-6-3	
-6-04	-6-4	
-6-05	-6-5	
CR3243-( )	N/A	

Table F – Blind Rivets

CR3523-( )	N/A	
CR3552-( )	N/A	
CR9162-4-2	MS20601AD4W2	
CR9163	MS20600	
-4-01	AD4W4	
-4-02	AD4W2	
-4-03	AD4W3	
MS20426( )	CCR264SS( )	Nutplate Rivet
NAS1097( )	CCR244SS( )	Nutplate Rivet
NAS1398D5A2	RV1200-5-2	Equivalent Substitution
NAS1738( )	N/A	
RV1200-5-2	NAS1398D5A2	Equivalent Substitution
SD42BS[15]	CCP-42	
SD44BS[16]	CCP-44	

[15] Commercial Product: SD42BS equivalents include SB4-2, SS D42, SSP-42, SS42F, S/S 42D and 4-2SSD

[16] Commercial Product: SD44BS equivalents include SB4-4, SS D44, SSP-44, SS44F, S/S 44D and 4-SSD

UNCONTROLLED COPY WHEN DOWNLOADED OR PRINTED

Visit www.enstromhelicopter.com for instructions to order an original manual and to register for email notification updates.

Table G – Washers

WASHER	ALTERNATE	
AN935	MS35338	
-4	-40	Equivalent Substitution
-6	-41	
-8	-42	
-8L	-42	
B8L	-99	
-10	-43	
-416	-44	
-416L	-44	
AN936	MS35333	
A6	-37	Equivalent Substitution
A8	-38	
A10	-39	
A416	-40	
A516	-41	
A616	-42	
A716	-43	
A816	-44	
A1216	-47	
-B4	-29	
AN940-13	MS27183-1	
AN960[17]	NAS1149	
-3L	FN316P	Equivalent Substitution
-4L	FN416P	
-6	FN632P	
-6L	FN616P	
-8	FN832P	
-8L	FN816P	
-10	F0363P	
-10L	F0332P	
-416	F0463P	
-416L	F0432P	
-516	F0563P	
-516L	F0532P	
-616	F0663P	
-616L	F0632P	
-716	F0763P	
-716L	F0732P	
-816	F0863P	

Table G – Washers

-916	F0963P	Equivalent Substitution
-1216L	F1232P	
B6	BN632H	
B8	BN832H	
B416L	N/A	
C6	CN632R	
C10	C0363R	
C10L	C0332R	
C416	C0463R	
C416L	C0432R	
C516	C0563R	
C516L	C0532R	
C616L	C0632R	
C816	C0863R	
C1216	C1290R	
C1616	C1690R	
CD6L	N/A	
D3L	DN316H	
D10	D0363H	
D10L	D0316H	
D416	D0463H	
D416L	D0416H	
D516	D0563H	
D516L	D0516H	
D616	D0663H	
D616L	D0616H	
D6L	DN616H	
D8	DN832H	
D8L	DN816H	
D9	DN949H	
KD10L	D0332K	
PD8L	DN816J	
PD10	D0363J	
PD10L	D0316J	
PD416	D0463J	
PD416L	D0416J	
AN960	NAS620	Equivalent Substitution
AN970-( )	N/A	
AN975-( )	N/A	

[17] See Table AF for complete listing.

UNCONTROLLED COPY WHEN DOWNLOADED OR PRINTED

Visit www.enstromhelicopter.com for instructions to order an original manual and to register for email notification updates.

Table G – Washers

HARPER	BOKER'S	
3/16 1/4 3/8	C145712[18] C102780[19] C102781[20]	Equivalent Substitution
HARPER	ECD050	
3/16 1/4 5/16 3/8	-21[21] -11[22] -19[23] -15[24]	Equivalent Substitution
5/8	-17[25]	
BOKER'S	ECD050	
C102780 C102781 C145712 C162187 C162188 C162189 C162190 C162191 C172152 C173300	-11 -15 -21 -11 -13 -15 -17 -19 -23 -25	Equivalent Substitution
MS20002-( )	N/A	
MS27183-1	AN940-13	
MS35333	AN936	
-37 -38 -39 -40 -41 -42 -43 -44 -47 -29	A6 A8 A10 A416 A516 A616 A716 A816 A1216 -B4	Equivalent Substitution

Table G – Washers

MS35338	AN935	
-40 -41 -42 -42 -99 -43 -44	-4 -6 -8 -8L B8L -10 -416L	Equivalent Substitution
MS51859-15	N/A	
NAS1149	NAS620	Equivalent Substitution

[18] 0.688" OD x 0.203" ID x 0.041", 304 Stainless Steel
[19] 0.69" OD x 0.265" ID x 0.048", 304 Stainless Steel
[20] 1.00" OD x 0.392" ID x 0.062", 316 Stainless Steel
[21] 0.688" OD x 0.203" ID x 0.041", 304 Stainless Steel
[22] 0.69" OD x 0.265" ID x 0.048", 304 Stainless Steel
[23] 0.875" OD x 0.337" ID x 0.062", 316 Stainless Steel
[24] 1.00" OD x 0.392" ID x 0.062", 316 Stainless Steel
[25] 0.625" OD x 0.260" ID x 0.062", 316 Stainless Steel

UNCONTROLLED COPY WHEN DOWNLOADED OR PRINTED

Visit www.enstromhelicopter.com for instructions to order an original manual and to register for email notification updates.

Table H - Rivnuts

RIV NUT	ALTERNATE	
A8K75	MS27130A13K	Equivalent Substitution
A10K	MS27130	
80	A25K	Equivalent Substitution
116	A99K	
130	A26K	
166	A100K	
216	A101K	
MS27130	A10K	
A25K	80	Equivalent Substitution
A99K	116	
A26K	130	
A100K	166	
A101K	216	
MS27130	NAS1329	
A13K	A8K75	Equivalent Substitution
A25K	A3K80	
A26K	AK130	
MS27130	NAS1330	
A99K	A3K116	Equivalent Substitution
A100K	A3K166	
A101K	A3K216	
NAS1329	MS27130	
A8K75	A13K	Equivalent Substitution
A3K80	A25K	
AK130	A26K	
NAS1330	MS27130	
A3K116	A99K	Equivalent Substitution
A3K166	A100K	
A3K216	A101K	

Table I - Turnbuckles

TURN BUCKLE	ALTERNATE	
MS21251-( )	N/A	
MS21256-( )	N/A	

Table J - Grommets

GROMMETS	ALTERNATE	
AN931	MS35489	
-2-9	-2	
-2-16	-3	
-3-5	-4	
-3-9	-134	
-3-10	-5	
-4-7	-6	
-4-12	-7	
-4-16	-8	
-5-9	-9	
-5-12	-10	
-5-13	-118	
-6-10	-11	
-6-16	-12	
-7-11	-13	
-8-13	-14	
-8-20	-15	
-9-13	-16	
-10-14	-17	
-10-20	-18	
-11-16	-19	
-12-17	-20	
-12-20	-135	
-12-23	-21	
-12-26	-120	
-14-20	-22	
-14-26	-121	
-16-22	-23	
-16-30	-24	
-20-38	-25	
-20-40	-26	
-24-28	-27	

UNCONTROLLED COPY WHEN DOWNLOADED OR PRINTED

Visit www.enstromhelicopter.com for instructions to order an original manual and to register for email notification updates.

Table K – Cotter Pins

COTTER PINS	ALTERNATE	
AN381	MS24665	
-1-6	N/A	
-1-8	-22	
-1-12	-24	
-1-16	-26	
-15-5	N/A	
-15-6	N/A	
-15-7	N/A	
-15-8	-58	
-15-10	N/A	
-15-12	-88	
-15-14	N/A	
-15-16	-90	
-15-20	-91	
-15-24	-92	
-15-28	-93	
-15-32	-94	
-2-5	N/A	
-2-6	N/A	
-2-7	-1013	
-2-8	-151	
-2-10	-152	
-2-12	-153	
-2-14	N/A	
-2-16	-155	
-2-20	-157	
-2-24	-159	
-2-28	-161	
-2-32	-162	
-25-8	-227	
-25-10	N/A	
-25-12	-229	
-25-14	N/A	
-25-16	-231	
-25-18	N/A	
-25-20	-233	
-25-22	N/A	
-25-24	-235	
-25-26	N/A	
-25-28	-237	
-25-32	-238	

Table K – Cotter Pins

-3-8	-298	
-3-10	N/A	
-3-12	-300	
-3-14	N/A	
-3-16	-302	
-3-18	N/A	
-3-20	-304	
-3-22	N/A	
-3-24	-306	
-3-26	N/A	
-3-28	-308	
-3-32	-309	
-4-8	-366	
-4-12	-368	
-4-14	N/A	
-4-16	-370	
-4-18	N/A	
-4-20	-372	
-4-22	N/A	
-4-24	374	
-4-26	N/A	
-4-28	-376	
-4-32	-377	
-4-36	-378	
-5-8	N/A	
-5-12	-436	
-5-16	-437	
-5-18	N/A	
-5-20	-439	
-5-22	N/A	
-5-24	-441	
-5-26	N/A	
-5-28	-443	
-5-32	-444	
-5-36	-445	
-5-40	-446	
-6-24	-513	
-6-26	N/A	
-6-28	-515	
-6-32	-516	
-6-36	-517	
-6-40	-518	
-6-48	-520	

UNCONTROLLED COPY WHEN DOWNLOADED OR PRINTED

Visit www.enstromhelicopter.com for instructions to order an original manual and to register for email notification updates.

Table K – Cotter Pins

-7-32	-580	
-7-36	-581	
-7-40	-582	
-8-32	-640	
-8-36	-641	
-8-40	-642	
-8-48	-643	
-8-56	-644	
-8-64	-645	
-10-32	-701	
-10-36	-702	
-10-40	-703	

Table L – Clamps (Nylon)

CLAMPS	ALTERNATE	
1/8-6NA	CCH12-S10	
1/4-6NA	CCH25-S10	
3/8-6NA	CCH38-S10	
1/2-6NA	CCH50-S10	
5/8-6NA	CCH62-S10	
3/4-6NA	CCH75-S10	
7/8-6NA	CCH87-S10	
1-6NA	CCH100-S10	
439-SS4-8-2-6	NAS1714C3-4NW	Equivalent Substitution

Table M – Cable Ties

CABLE TIE	ALTERNATE	
SST2S-( )[26]	CBR3S-M	Equivalent Substitution
SST1.5I-( )[1]	CBR3I-M or CBR1.5I-M	
SST1M-( )[1]	CBR1M-M or CBR2M-M	
ILT2S-M	CBR3S-M	
ILT1.5I-M	CBR3I-M CBR1.5I-M	
ILT1M-M	CBR1M-M or CBR2M-M	

Table N – U-Channel (Rubber)

U-CHANNEL	ALTERNATE	
X-142	AX-142P	Equivalent Substitution
X-142[27]	GE52-C69 GEE36FR-C GEE62FR-C GEE36FR-CY GEE62FR-CY	Equivalent Substitution

Table O – Shrink Tubing

SHRINK TUBING	ALTERNATE	
3028-3/32	FIT-221V-3/32	Equivalent Substitution
3028-1/8	FIT-221V-1/8	
3028-1/4	FIT-221V-1/4	
3028-3/8	FIT-221V-3/8	
FIT-221V-1/2	N/A	
FIT-221V-3/4	N/A	
FIT-221V-1	N/A	
FIT-221V-1 1/2	N/A	
FIT221V-3/16AL	N/A	

[26] Suffix may either be -MP or -P.

[27] Substitution to GE( ) or GEE( ) permitted only for interior non-aesthetic areas.

UNCONTROLLED COPY WHEN DOWNLOADED OR PRINTED

Visit www.enstromhelicopter.com for instructions to order an original manual and to register for email notification updates.

Table P – Ring Tongue Terminals

RING TONGUE TERMINAL	ALTERNATE	
AA	MS25036	
-820-04	-148	
-821-06	-102	
-821-08	-149	
-821-10	-103	
-822-10	-103	
-822-14	-150	
-822-56	-104	
-832-06	-102	
BB	MS25036	
-523-04	-152	
-525-14	-154	
-537-04	-152	
-537-10	-108	
-818-38	-110	
-825-14	-154	
-825-56	-109	
-837-06	-107	
-837-08	-153	
-837-10	-108	
C	MS25036	
-528-08	-156	
-528-10	-112	
-530-56	-113	
-540-38	-114	
-828-08	-156	
-828-10	-112	
-830-14	-157	
-830-56	-113	
-836-06	-111	
-840-38	-114	
D	MS25036	
-750-14	-116	
-751-56	-117	
-756-06	190670035[28]	
-756-08	190670037[3]	
E	MS25036	
-360-14	-120	

Table P – Ring Tongue Terminals

-760-14	-120	
-760-56	-121	
-960-56	-121	
F	MS20659	
-366-14	-111	
-366-38	-112	
-366-56	-132	
-367-10	-144	
-367-14	-111	
-367-56	-132	
G-375-14	MS20659	
-375-14	-113	
-375-38	-114	
-375-56	-147	
M	MS25036	
-8113-04	-144	
-8118-06	-145	
-8118-08	-146	

Table Q – Retaining Rings

RETAINING RING	ALTERNATE	
N5100-78-S-PP	ON78EXTSP (Meyer)	
N5002-268-PP	ON268INVSP	

Table R – Cushioned Clamps

CLAMP	ALTERNATE	
MS21919( )[30]	MS21919W( )	
MS21919DG( )	MS21919CJ( )	
MS21919WDG( )	MS21919WCJ( )	

Table S – Plusnuts

PLUSNUT	ALTERNATE	
S8P-270	S8P270ZK	Equivalent Substitution

[28] ETC/Molex

[30] MS21919F series clamps not permitted for use or substitution.

UNCONTROLLED COPY WHEN DOWNLOADED OR PRINTED

Visit www.enstromhelicopter.com for instructions to order an original manual and to register for email notification updates.

Table T – Solder Sleeve Shield Terminator

SOLDER SLEEVE SHIELD TERMINATOR	ALTERNATE	
ST63-2-00	M83519/1-2	
ST63-3-00	M83519/1-3	
ST63-4-00	M83519/1-4	
ST63-5-00	M83519/1-5	

Table U – Plug, Pipe – Countersink Hex Head

PLUG, PIPE	ALTERNATE	
AN932-( )	MS27769-( )	

Table V – Clip Nut

CLIP NUT	ALTERNATE	
RM52LHA4972802	13100000-5	

Table W – Plug and Bleeder – Screw Thread

PLUG AND BLEEDER	ALTERNATE	
AN814-2D	AS5169D02	
AN814-2DL	AS5169D02L	
AN814-3DL	AS5169D03L	
AN814-4DL	AS5169D04L	
AN814-5DL	AS5169D05L	
AN814-6DL	AS5169D06L	
AN814-8DL	AS5169D08L	

Table X – Pin, Retaining, Safety

PIN, RETAINING, SAFETY	ALTERNATE	
AN416-1	A-A-55488-1	
AN416-2	A-A-55488-2	

Table Y – Quarter Turn Fastener

QUARTER TURN FASTENER	ALTERNATE	
AW4-( )	AJW4-( )	
AW4-( )	D4-AJW4-( )	

Table Z – Quick Disconnect Terminal

TERMINAL	ALTERNATE	
AA-2201	19003-0001	Equivalent Substitution
AA-2202	19003-0011	
AA-2204	19003-0024	
AA-8137	19019-0006	
BB-2206	19003-0040	
BB-8132	19019-0022	
C-2265	19005-0010	

Table AA – Plug (BNC, TNC, N)

PLUG	ALTERNATE	
225345-6	5-225345-6	Equivalent Substitution
225392-2	5225392-2	
225395-6	5225395-6	
225395-7	5225395-7	
225396-7	5225396-7	
225554-6	5225554-6	
225699-1	5225699-1	
225973-4	5225973-4	
UG-89A/U	031-5	
	31-5	
	UG-89/U	

Table AB – Roll Pin

ROLL PIN	ALTERNATE	
( )S-094-0625	MS16562-215	

Table AC – Sleeve, Coupling

SLEEVE, COUPLING	ALTERNATE	
AN819-( )	MS20819-( )	
MS20819-( )	MS20819-( )J	

UNCONTROLLED COPY WHEN DOWNLOADED OR PRINTED

Visit www.enstromhelicopter.com for instructions to order an original manual and to register for email notification updates.

Table AD – Clevis Pin

CLEVIS PIN	ALTERNATE	
AN393-( )	MS20392-2C( )	
AN394-( )	MS20392-3C( )	
AN395-( )	MS20392-4C( )	

Table AE – Quarter (1/4) Turn Fastener Receptacle

QUARTER (1/4) TURN FASTENER RECEPTACLE	ALTERNATE	
S4-200	1219-4200-Z3Y	

UNCONTROLLED COPY WHEN DOWNLOADED OR PRINTED

Visit www.enstromhelicopter.com for instructions to order an original manual and to register for email notification updates.

Table AF – Washers, Extended AN960 Listing

PART NUMBERS					
CANCELLED PART NUMBER	SUBSTITUTE PART NUMBER	CANCELLED PART NUMBER	SUBSTITUTE PART NUMBER	CANCELLED PART NUMBER	SUBSTITUTE PART NUMBER
AN960-2L	NAS1149FN216P	AN960C2L	NAS1149CN216R	AN960XC2L	NAS1149CN216B
AN960-2	NAS1149FN232P	AN960C2	NAS1149CN232R	AN960XC2	NAS1149CN232B
AN960-3L	NAS1149FN316P	AN960C3L	NAS1149CN316R	AN960XC3L	NAS1149CN316B
AN960-3	NAS1149FN332P	AN960C3	NAS1149CN332R	AN960XC3	NAS1149CN332B
AN960-4L	NAS1149FN416P	AN960C4L	NAS1149CN416R	AN960XC4L	NAS1149CN416B
AN960-4	NAS1149FN432P	AN960C4	NAS1149CN432R	AN960XC4	NAS1149CN432B
AN960-5	NAS1149FN542P	AN960C5	NAS1149CN542R	AN960XC5	NAS1149CN542B
AN960-6L	NAS1149FN616P	AN960C6L	NAS1149CN616R	AN960XC6L	NAS1149CN616B
AN960-6	NAS1149FN632P	AN960C6	NAS1149CN632R	AN960XC6	NAS1149CN632B
AN960-8L	NAS1149FN816P	AN960C8L	NAS1149CN816R	AN960XC8L	NAS1149CN816B
AN960-8	NAS1149FN832P	AN960C8	NAS1149CN832R	AN960XC8	NAS1149CN832B
AN960-9	NAS1149FN949P	AN960C9	NAS1149CN949R	AN960XC9	NAS1149CN949B
AN960-10L	NAS1149F0332P	AN960C10L	NAS1149C0332R	AN960XC10LL	NAS1149C0316B
AN960-10	NAS1149F0363P	AN960C10	NAS1149C0363R	AN960XC10L	NAS1149C0332B
AN960-11	NAS1149F1165P	AN960C11	NAS1149C1165R	AN960XC10	NAS1149C0363B
AN960-416L	NAS1149F0432P	AN960C416L	NAS1149C0432R	AN960XC11	NAS1149C1165B
AN960-416	NAS1149F0463P	AN960C416	NAS1149C0463R	AN960XC416L	NAS1149C0432B
AN960-516L	NAS1149F0532P	AN960C516L	NAS1149C0532R	AN960XC416	NAS1149C0463B
AN960-516	NAS1149F0563P	AN960C516	NAS1149C0563R	AN960XC516L	NAS1149C0532B
AN960-616LL	NAS1149F0616P	AN960C616LL	NAS1149C0616R	AN960XC516	NAS1149C0563B
AN960-616L	NAS1149F0632P	AN960C616L	NAS1149C0632R	AN960XC616LL	NAS1149C0616B
AN960-616	NAS1149F0663P	AN960C616	NAS1149C0663R	AN960XC616L	NAS1149C0632B
AN960-716L	NAS1149F0732P	AN960C716L	NAS1149C0732R	AN960XC616	NAS1149C0663B
AN960-716	NAS1149F0763P	AN960C716	NAS1149C0763R	AN960XC716LL	NAS1149C0716B
AN960-816L	NAS1149F0832P	AN960C816L	NAS1149C0832R	AN960XC716L	NAS1149C0732B
AN960-816	NAS1149F0863P	AN960C816	NAS1149C0863R	AN960XC716	NAS1149C0763B
AN960-916L	NAS1149F0932P	AN960C916L	NAS1149C0932R	AN960XC816L	NAS1149C0832B
AN960-916	NAS1149F0963P	AN960C916	NAS1149C0963R	AN960XC816	NAS1149C0863B
AN960-1016L	NAS1149F1032P	AN960C1016L	NAS1149C1032R	AN960XC916L	NAS1149C0932B
AN960-1016	NAS1149F1063P	AN960C1016	NAS1149C1063R	AN960XC916	NAS1149C0963B
AN960-1216L	NAS1149F1232P	AN960C1216L	NAS1149C1232R	AN960XC1016L	NAS1149C1032B
AN960-1216	NAS1149F1290P	AN960C1216	NAS1149C1290R	AN960XC1016	NAS1149C1063B
AN960-1416L	NAS1149F1432P	AN960C1416L	NAS1149C1432R	AN960XC1216L	NAS1149C1232B
AN960-1416	NAS1149F1490P	AN960C1416	NAS1149C1490R	AN960XC1216	NAS1149C1290B
AN960-1616L	NAS1149F1632P	AN960C1616L	NAS1149C1632R	AN960XC1416L	NAS1149C1432B
AN960-1616	NAS1149F1690P	AN960C1616	NAS1149C1690R	AN960XC1416	NAS1149C1490B
AN960-1716L	NAS1149F1732P	AN960C1716	NAS1149C1790R	AN960XC1616L	NAS1149C1632B
AN960-1716	NAS1149F1790P	AN960C1816	NAS1149C1890R	AN960XC1616	NAS1149C1690B
AN960-1816L	NAS1149F1832P	AN960C2016	NAS1149C2090R	AN960XC1716	NAS1149C1790B
AN960-1816	NAS1149F1890P	AN960C2116	NAS1149C2190R	AN960XC1816	NAS1149C1890B
AN960-2016L	NAS1149F2032P	AN960C2616	NAS1149C2690R	AN960XC2016	NAS1149C2090B
AN960-2016	NAS1149F2090P	AN960C3016	NAS1149C3090R	AN960XC2116	NAS1149C2190B
AN960-2116L	NAS1149F2132P	AN960C3616	NAS1149C3690R	AN960XC2616	NAS1149C2690B
AN960-2116	NAS1149F2190P	AN960C4016	NAS1149C4090R	AN960XC3016	NAS1149C3090B
AN960-2616L	NAS1149F2632P			AN960XC3616	NAS1149C3690B
AN960-2616	NAS1149F2690P			AN960XC4016	NAS1149C4090B
AN960-3016L	NAS1149F3032P				
AN960-3016	NAS1149F3090P				
AN960-3616L	NAS1149F3632P				
AN960-3616	NAS1149F3690P				
AN960-4016L	NAS1149F4032P				
AN960-4016	NAS1149F4090P				

UNCONTROLLED COPY WHEN DOWNLOADED OR PRINTED

Visit www.enstromhelicopter.com for instructions to order an original manual and to register for email notification updates.

Table AF – Washers, Extended AN960 Listing

PART NUMBERS					
CANCELLED PART NUMBER	SUBSTITUTE PART NUMBER	CANCELLED PART NUMBER	SUBSTITUTE PART NUMBER	CANCELLED PART NUMBER	SUBSTITUTE PART NUMBER
AN960JD2L	NAS1149DN216J	AN960B2	NAS1149BN232H	AN960KD2L	NAS1149DN216K
AN960JD	NAS1149DN232J	AN960B3	NAS1149BN332H	AN960KD2	NAS1149DN232K
AN960JD3L	NAS1149DN316J	AN960B4	NAS1149BN432H	AN960KD3L	NAS1149DN316K
AN960JD3	NAS1149DN332J	AN960B5	NAS1149BN542H	AN960KD3	NAS1149DN332K
AN960JD4L	NAS1149DN416J	AN960B6	NAS1149BN632H	AN960KD4L	NAS1149DN416K
AN960JD4	NAS1149DN432J	AN960B8	NAS1149BN832H	AN960KD4	NAS1149DN432K
AN960JD5	NAS1149DN542J	AN960B9	NAS1149BN949H	AN960KD5	NAS1149DN542K
AN960JD6L	NAS1149DN616J	AN960B10	NAS1149B0363H	AN960KD6L	NAS1149DN616K
AN960JD6	NAS1149DN632J	AN960B11	NAS1149B1165H	AN960KD6	NAS1149DN632K
AN960JD8L	NAS1149DN816J	AN960B416	NAS1149B0463H	AN960KD8L	NAS1149DN816K
AN960JD8	NAS1149DN832J	AN960B516	NAS1149B0563H	AN960KD8	NAS1149DN832K
AN960JD9	NAS1149DN949J	AN960B616	NAS1149B0663H	AN960KD9	NAS1149DN949K
AN960JD10LL	NAS1149D0316J	AN960B716	NAS1149B0763H	AN960KD10LL	NAS1149D0316K
AN960JD10L	NAS1149D0332J	AN960B816	NAS1149B0863H	AN960KD10L	NAS1149D0332K
AN960JD10	NAS1149D0363J	AN960B916	NAS1149B0963H	AN960KD10	NAS1149D0363K
AN960JD11	NAS1149D1165J	AN960B1016	NAS1149B1063H	AN960KD11	NAS1149D1165K
AN960JD416L	NAS1149D0416J	AN960B1216	NAS1149B1290H	AN960KD416L	NAS1149D0416K
AN960JD416	NAS1149D0463J	AN960B1416	NAS1149B1490H	AN960KD416	NAS1149D0463K
AN960JD516L	NAS1149D0516J	AN960B1616	NAS1149B1690H	AN960KD516L	NAS1149D0516K
AN960JD516	NAS1149D0563J	AN960B1716	NAS1149B1790H	AN960KD516	NAS1149D0563K
AN960JD616L	NAS1149D0616J	AN960B1816	NAS1149B1890H	AN960KD616L	NAS1149D0616K
AN960JD616	NAS1149D0663J	AN960B2016	NAS1149B2090H	AN960KD616	NAS1149D0663K
AN960JD716L	NAS1149D0716J	AN960B2116	NAS1149B2190H	AN960KD716L	NAS1149D0716K
AN960JD716	NAS1149D0763J	AN960B2616	NAS1149B2690H	AN960KD716	NAS1149D0763K
AN960JD816L	NAS1149D0816J	AN960B3016	NAS1149B3090H	AN960KD816L	NAS1149D0816K
AN960JD816	NAS1149D0863J	AN960B3616	NAS1149B3690H	AN960KD816	NAS1149D0863K
AN960JD916L	NAS1149D0916J	AN960B4016	NAS1149B4090H	AN960KD916L	NAS1149D0916K
AN960JD916	NAS1149D0963J			AN960KD916	NAS1149D0963K
AN960JD1016L	NAS1149D1016J			AN960KD1016L	NAS1149D1016K
AN960JD1016	NAS1149D1063J			AN960KD1016	NAS1149D1063K
AN960JD1216L	NAS1149D1216J			AN960KD1216L	NAS1149D1216K
AN960JD1216	NAS1149D1290J			AN960KD1216	NAS1149D1290K
AN960JD1416L	NAS1149D1416J			AN960KD1416L	NAS1149D1416K
AN960JD1416	NAS1149D1490J			AN960KD1416	NAS1149D1490K
AN960JD1616L	NAS1149D1616J			AN960KD1616L	NAS1149D1616K
AN960JD1616	NAS1149D1690J			AN960KD1616	NAS1149D1690K
AN960JD1716L	NAS1149D1716J			AN960KD1716L	NAS1149D1716K
AN960JD1716	NAS1149D1790J			AN960KD1716	NAS1149D1790K
AN960JD1816L	NAS1149D1816J			AN960KD1816L	NAS1149D1816K
AN960JD1816	NAS1149D1890J			AN960KD1816	NAS1149D1890K
AN960JD2016L	NAS1149D2016J			AN960KD2016L	NAS1149D2016K
AN960JD2016	NAS1149D2090J			AN960KD2016	NAS1149D2090K
AN960JD2116L	NAS1149D2116J			AN960KD2116L	NAS1149D2116K
AN960JD2116	NAS1149D2190J			AN960KD2116	NAS1149D2190K
AN960JD2616L	NAS1149D2616J			AN960KD2616L	NAS1149D2616K
AN960JD2616	NAS1149D2690J			AN960KD2616	NAS1149D2690K
AN960JD3016L	NAS1149D3016J			AN960KD3016L	NAS1149D3016K
AN960JD3016	NAS1149D3090J			AN960KD3016	NAS1149D3090K
AN960JD3616L	NAS1149D3616J			AN960KD3616L	NAS1149D3616K
AN960JD3616	NAS1149D3690J			AN960KD3616	NAS1149D3690K
AN960JD4016L	NAS1149D4016J			AN960KD4016L	NAS1149D4016K
AN960JD4016	NAS1149D4090J			AN960KD4016	NAS1149D4090K

UNCONTROLLED COPY WHEN DOWNLOADED OR PRINTED

Visit www.enstromhelicopter.com for instructions to order an original manual and to register for email notification updates.

Table AF – Washers, Extended AN960 Listing

PART NUMBERS			
CANCELLED PART NUMBER	SUBSTITUTE PART NUMBER	CANCELLED PART NUMBER	SUBSTITUTE PART NUMBER
AN960PD2L	NAS1149DN216J	AN960D2L	NAS1149DN216H
AN960PD2	NAS1149DN232J	AN960D2	NAS1149DN232H
AN960PD3L	NAS1149DN316J	AN960D3L	NAS1149DN316H
AN960PD3	NAS1149DN332J	AN960D3	NAS1149DN332H
AN960PD4L	NAS1149DN416J	AN960D4L	NAS1149DN416H
AN960PD4	NAS1149DN432J	AN960D4	NAS1149DN432H
AN960PD5	NAS1149DN542J	AN960D5	NAS1149DN542H
AN960PD6L	NAS1149DN616J	AN960D6L	NAS1149DN616H
AN960PD6	NAS1149DN632J	AN960D6	NAS1149DN632H
AN960PD8L	NAS1149DN816J	AN960D8L	NAS1149DN816H
AN960PD8	NAS1149DN832J	AN960D8	NAS1149DN832H
AN960PD9	NAS1149DN949J	AN960D9	NAS1149DN949H
AN960PD10L	NAS1149D0316J	AN960D10L	NAS1149D0316H
AN960PD10	NAS1149D0363J	AN960D10	NAS1149D0363H
AN960PD11	NAS1149D1165J	AN960D11	NAS1149D1165H
AN960PD416L	NAS1149D0416J	AN960D416L	NAS1149D0416H
AN960PD416	NAS1149D0463J	AN960D416	NAS1149D0463H
AN960PD516L	NAS1149D0516J	AN960D516L	NAS1149D0516H
AN960PD516	NAS1149D0563J	AN960D516	NAS1149D0563H
AN960PD616L	NAS1149D0616J	AN960D616L	NAS1149D0616H
AN960PD616	NAS1149D0663J	AN960D616	NAS1149D0663H
AN960PD716L	NAS1149D0716J	AN960D716L	NAS1149D0716H
AN960PD716	NAS1149D0763J	AN960D716	NAS1149D0763H
AN960PD816L	NAS1149D0816J	AN960D816L	NAS1149D0816H
AN960PD816	NAS1149D0863J	AN960D816	NAS1149D0863H
AN960PD916L	NAS1149D0916J	AN960D916L	NAS1149D0916H
AN960PD916	NAS1149D0963J	AN960D916	NAS1149D0963H
AN960PD1016L	NAS1149D1016J	AN960D1016L	NAS1149D1016H
AN960PD1016	NAS1149D1063J	AN960D1016	NAS1149D1063H
AN960PD1216L	NAS1149D1216J	AN960D1216L	NAS1149D1216H
AN960PD1216	NAS1149D1290J	AN960D1216	NAS1149D1290H
AN960PD1416L	NAS1149D1416J	AN960D1416L	NAS1149D1416H
AN960PD1416	NAS1149D1490J	AN960D1416	NAS1149D1490H
AN960PD1616L	NAS1149D1616J	AN960D1616L	NAS1149D1616H
AN960PD1616	NAS1149D1690J	AN960D1616	NAS1149D1690H
AN960PD1716L	NAS1149D1716J	AN960D1716L	NAS1149D1716H
AN960PD1716	NAS1149D1790J	AN960D1716	NAS1149D1790H
AN960PD1816L	NAS1149D1816J	AN960D1816L	NAS1149D1816H
AN960PD1816	NAS1149D1890J	AN960D1816	NAS1149D1890H
AN960PD2016L	NAS1149D2016J	AN960D2016L	NAS1149D2016H
AN960PD2016	NAS1149D2090J	AN960D2016	NAS1149D2090H
AN960PD2116L	NAS1149D2116J	AN960D2116L	NAS1149D2116H
AN960PD2116	NAS1149D2190J	AN960D2116	NAS1149D2190H
AN960PD2616L	NAS1149D2616J	AN960D2616L	NAS1149D2616H
AN960PD2616	NAS1149D2690J	AN960D2616	NAS1149D2690H
AN960PD3016L	NAS1149D3016J	AN960D3016L	NAS1149D3016H
AN960PD3016	NAS1149D3090J	AN960D3016	NAS1149D3090H
AN960PD3616L	NAS1149D3616J	AN960D3616L	NAS1149D3616H
AN960PD3616	NAS1149D3690J	AN960D3616	NAS1149D3690H
AN960PD4016L	NAS1149D4016J	AN960D4016L	NAS1149D4016H
AN960PD4016	NAS1149D4090J	AN960D4016	NAS1149D4090H

UNCONTROLLED COPY WHEN DOWNLOADED OR PRINTED

Visit www.enstromhelicopter.com for instructions to order an original manual and to register for email notification updates.

INTENTIONALLY LEFT BLANK

UNCONTROLLED COPY WHEN DOWNLOADED OR PRINTED

Visit www.enstromhelicopter.com for instructions to order an original manual and to register for email notification updates.